FAURE|HALVORSEN
ARCHITECTS
ARCHITECTURE • PLANNING • INTERIORS

# ADDENDUM NUMBER ONE

**PROJECT:** **MONTANA FISH WILDLIFE AND PARKS**

**CONCESSION KITCHEN EXPANSION WHITEHALL, MT**

**FWP #7186601**

**DATE:** **MARCH 6, 2020**

**DISTRIBUTION:** **TO ALL BIDDERS AND PLAN HOLDERS OF RECORD**

Acknowledge the receipt of this Addendum by inserting its number and date in your proposal. Failure to do so may subject the bidder to disqualification. This Addendum forms a part of the Contract Documents as if bound therein, and modifies them as follows:

## AMMENDMENTS TO THE PROJECT MANUAL

1. The project has been permitted through the Building Codes Bureau, State of Montana. The FWP has paid for the plan review fee. The permit is ready for construction. The general contractor is responsible for the building permit fee.

2. Fish Wildlife and Parks has indicated that the primary road accessing the project site from the local highway is not plowed during the winter months. The road is not maintained October through April, with the exception of specific events at the Caverns. The contractor would be responsible for snow removal if work is planned while the road is not being maintained.

3. Prior approvals:

    a. Versiguard EPDM Roofing is approved.

4. Section 015000 1.2 B. Water: Water is available and free to use from the Owner's onsite water system. Water is shut down and is not available October through April. Contractors requiring water during the October to April shutdown period will have to haul water to the site.

5. Section 0754316 Ethylene Interpolymer Roofing (KEE) Delete section in its entirety. Roofing to be fully adhered 60 mil EPDM Roofing by Firestone or an approved equal. Follow manufacturers recommendations for installation and warranty.

## CLARIFICATIONS TO THE DRAWINGS

1. Sheet D2.1: Key Notes. Delete Note 6. All appliances will be removed by Owner prior to construction. Delete Note 8. Replace Note 8 with Note 7. (Note 8 and Note 7 are now the same Note.) The Note 10 symbol pointing to the door in the kitchen area should be a Note 9: Remover existing door and frame complete. The Note 10 symbol pointing to the hand sink will remain. Remove existing plumbing. See Mechanical.

2. Sheet D2.2: Key Notes. The Key Note 9 symbol pointing to the roof on the roof demolition plan, should be deleted and replaced with Key Note 8. (Cut and remove existing roof structure and roofing materials complete.) Notes 2, 3, 4, 5, 6, 7, 9, 10, and 11 are not used on this sheet.

1425 W. MAIN ST., SUITE A
BOZEMAN, MT 59715
OFFICE: 406 • 587 • 1204
FHA@FHARCHITECTS.COM
WWW.FHARCHITECTS.COM

**SUPPLEMENTAL INFORMATION**

a. Pre-Bid Walk-Through Attendees

b. Captive Aire Drawings

## HOOD INFORMATION – Job#3914001

| HOOD NO. | TAG | MODEL | LENGTH | MAX. COOKING TEMP. | EXHAUST PLENUM TOTAL EXH. CFM | RISER(S) WIDTH | LENG. | HEIGHT | DIA. | CFM | VEL. | S.P. | TOTAL SUPPLY CFM | HOOD CONSTRUCTION | HOOD CONFIG. END TO END | ROW |
|---|---|---|---|---|---|---|---|---|---|---|---|---|---|---|---|---|
| 1 | | 5412 SND-2-PSP-F | 8' 0" | 600 Deg. | 1800 | | | 4" | 14" | 1800 | 1684 | -0.698" | 1440 | 430 SS Where Exposed | ALONE | ALONE |

## PATENT NUMBERS

AC-PSP (United States) - US Patent 7963830 B2
AC-PSP Wall (Canada) - CA Patent 2820509
AC-PSP Island (Canada) - CA Patent 2520330

## HOOD INFORMATION

| HOOD NO. | TAG | FILTER(S) TYPE | QTY. | HEIGHT | LENGTH | EFFICIENCY @ 7 MICRONS | LIGHT(S) QTY. | TYPE | WIRE GUARD | UTILITY CABINET(S) LOCATION | SIZE | FIRE SYSTEM TYPE | FIRE SYSTEM SIZE | ELECTRICAL MODEL # | SWITCHES QUANTITY | FIRE SYSTEM PIPING | HOOD HANGING WGHT |
|---|---|---|---|---|---|---|---|---|---|---|---|---|---|---|---|---|---|
| 1 | | Captrate Solo Filter | 5 | 20" | 16" | 85% See Filter Spec. | 3 | Screw In Compact | NO | Left | 12"x27"x24" | Ansul R102 | 3.0/3.0 | | | YES | 685 LBS |

## HOOD OPTIONS

| HOOD NO. | TAG | OPTION |
|---|---|---|
| 1 | | FIELD WRAPPER 13.00" High Front, Left, Right |
| | | BACKSPLASH 105.00" High X 150.00" Long 430 SS Vertical |
| | | LEFT QUARTER END PANEL 23" Top Width, 0" Bottom Width, 23" High 430 SS |
| | | INSULATION FOR TOP OF HOOD |
| | | INSULATION FOR BACK OF HOOD |
| | | RIGHT VERTICAL END PANEL 27" Top Width, 21" Bottom Width, 68" High Insulated 430 SS |
| | | SENSOR-CV |

## PERFORATED SUPPLY PLENUM(S)

| HOOD NO. | TAG | POS. | LENGTH | WIDTH | HEIGHT | TYPE | RISER(S) WIDTH | LENG. | DIA. | CFM | S.P. |
|---|---|---|---|---|---|---|---|---|---|---|---|
| 1 | | Front | 96" | 20" | 6" | MUA | 12" | 28" | | 720 | 0.195" |
| | | | | | | MUA | 12" | 28" | | 720 | 0.195" |

## SPECIFICATION: CAPTRATE• GREASE-STOP• SOLO FILTER

THE CAPTRATE GREASE-STOP SOLO FILTER IS A SINGLE-STAGE FILTER FEATURING A UNIQUE S-BAFFLE DESIGN IN CONJUNCTION WITH A SLOTTED REAR BAFFLE DESIGN, TO DELIVER EXCEPTIONAL FILTRATION EFFICIENCY.

FILTER IS STAINLESS STEEL CONSTRUCTION, AND SIZED TO FIT INTO STANDARD 2-INCH DEEP HOOD CHANNEL(S).

UNITS SHALL INCLUDE STAINLESS STEEL HANDLES AND A FASTENING DEVICE TO SECURE THE TWO COMPONENTS WHEN ASSEMBLED.

GREASE EXTRACTION EFFICIENCY PERFORMANCE SHALL REMOVE AT LEAST 75% OF GREASE PARTICLES FIVE MICRONS IN SIZE, AND 85% GREASE PARTICLES SEVEN MICRONS IN SIZE AND LARGER, WITH A CORRESPONDING PRESSURE DROP NOT TO EXCEED 1.0 INCHES OF WATER GAUGE.

THE CAPTRATE GREASE-STOP SOLO WAS TESTED TO ASTM STANDARD ASTM F2519-05.

EFFICIENCY VS. PARTICLE DIAMETER

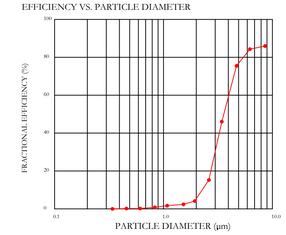


PRESSURE DROP VS. FLOW RATE

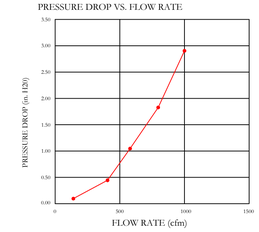


CAPTRATE FILTERS ARE BUILT IN COMPLIANCE WITH:
NFPA #96
NSF STANDARD #2
UL STANDARD #1046
INT. MECH. CODE (IMC)
ULC-S649

EXHAUST CFM=LENGTH OF HOOD X CFM/LIN.FT. (LOAD)

SUPPLY CFM=EXHAUST CFM X PERCENTAGE REQUIRED

TOTAL DUCT AREA=144 X $\frac{\text{CFM}}{\text{FMP(*)}}$

DUCT LENGTH= $\frac{\text{TOTAL DUCT AREA}}{\text{DUCT DEPTH}}$

* CAPTIVE-AIRE VENTILATOR DUCT SIZES ARE CALCULATED USING AN EXHAUST VELOCITY OF 1600-1800 FPM AND A SUPPLY VELOCITY OF 1000 FMP. PLEASE CONSULT FACTORY FOR MAXIMUM ALLOWABLE DUCT SIZES

### CALCULATIONS UTILIZED

ETL LISTING DESCRIPTION
THE CAPTIVEAIRE MODEL SND-2 HAS BEEN E.T.L TESTED, LISTED, AND APPROVED TO EXHAUST A MINIMUM OF 294 CFM PER LINEAR FOOT OVER 600 DEGREE COOKING EQUIPMENT

1. ALL ELECTRICAL "FIELD" CONNECTIONS AND RELATED INTERCONNECTIONS BY ELECTRICAL CONTRACTORS.
2. ALL PLUMBING "FIELD" CONNECTIONS AND RELATED INTERCONNECTIONS BY PLUMBING CONTRACTORS.
3. ALL ASSOCIATED HANGER MATERIALS BY INSTALLING CONTRACTORS.
4. 8" LONG FACTORY LOCATED AND WELDED HANGER BRACKETS AS SHOWN ON PLANS.
5. ALL CONNECTIONS FROM CAPTIVE-AIRE DUCT PER THE PLANS BY MECHANICAL CONTRACTORS.
6. ALL LIGHTS SHOWN INSTALLED BY CAPTIVE-AIRE, ARE FACTORY PREWIRED PER THE PLANS. INTERCONNECTIONS BETWEEN HOODS AND TO SWITCHES BY ELECTRICAL CONTRACTOR.
7. LAMPS FOR LIGHT FIXTURES BY INSTALLING CONTRACTORS.
8. SEISMIC RESTAINTS ARE RESPONSIBILITY OF INSTALLING CONTRACTOR.
9. INSTALLING CONTRACTORS ASSUME ALL RELATED REPONSIBILITY FOR VERIFICATION OF DIMENSIONAL DATA CONTAINED ON THESE DOCUMENTS FOR ACCURACY, INTEGRATION, AND ADMINISTRATION OF CODE REQUIREMENTS IN EFFECT PRIOR TO ANY RELEASE FOR PRODUCTION OF EQUIPMENT SHOWN.
10. SIGNED AND "APPROVED" COPIES OF THIS DOCUMENT MUST BE RECEIVED BY THE FACTORY PRIOR TO COMMENCEMENT OF FABRICATION.
11. NOMINAL HOOD DIMENSIONS AS SHOWN ON DRAWINGS.

### GENERAL NOTES

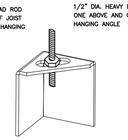


*ROD AND NUTS TO BE SUPPLIED BY INSTALLING CONTRACTOR
HANGING ANGLE IS PRE-PUNCHED AT FACTORY

### ND-2 HANGING ANGLE DETAIL

CAPTIVE-AIRE HOODS ARE BUILT IN COMPLIANCE WITH

Intertek

NFPA #96, NSF
UL 710 & ULC710 STANDARDS
E.T.L. LISTED 3054804-001

* PLEASE NOTE: THE HOOD MAY BE INSTALLED WITH A 0 INCH CLEARANCE TO COMBUSTIBLE MATERIALS IF CONSTRUCTED IN ONE OF THE FOLLOWING METHODS:
1 INCH LAYER OF INSULATION (TYPE 475) OWENS CORNING, JOHNS MANVILLE, 3M FIRE WRAP
1 INCH INSULATED BACKSPLASH
3 INCH AIRSPACE WITH 1" MIN. INSULATION BACK-RETURN (BR) WITH 1" MIN. INSULATION
THESE RATINGS APPLY TO TOP, ENDS, BACK AND FRONT OF THE EXHAUST HOOD
REPORT NUMBER: 3054804-001
INTERTEK TESTING SERVICES NA INC.

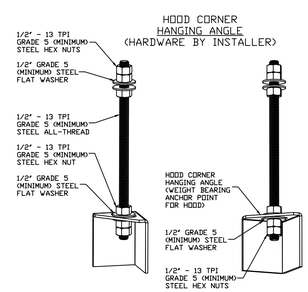


ASSEMBLY INSTRUCTIONS

HANGING ANGLE MUST BE SUPPORTED WITH 1/2" - 13 TPI GRADE 5 (MINIMUM) ALL-THREAD. SANDWICH HANGING ANGLES AND CEILING ANCHOR POINTS WITH 1/2" GRADE 5 (MINIMUM) STEEL FLAT WASHERS AND 1/2" - 13 TPI GRADE 5 (MINIMUM) HEX NUTS AS SHOWN. MUST USE DOUBLED HEX NUT CONFIGURATION BENEATH HOOD HANGING ANGLES AND ABOVE CEILING ANCHORS. MAINTAIN 1/4" OF EXPOSED THREADS BENEATH BOTTOM HEX NUT. TORQUE ALL HEX NUTS TO 57 FT-LBS.

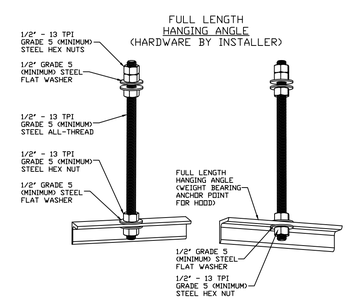


ASSEMBLY INSTRUCTIONS

HANGING ANGLE MUST BE SUPPORTED WITH 1/2" - 13 TPI GRADE 5 (MINIMUM) ALL-THREAD. SANDWICH HANGING ANGLES AND CEILING ANCHOR POINTS WITH 1/2" GRADE 5 (MINIMUM) STEEL FLAT WASHERS AND 1/2" - 13 TPI GRADE 5 (MINIMUM) HEX NUTS AS SHOWN. MUST USE DOUBLED HEX NUT CONFIGURATION ABOVE CEILING ANCHORS. SINGLE HEX NUT BENEATH HANGING ANGLE IS ACCEPTABLE FOR FULL LENGTH HANGING ANGLES. MAINTAIN 1/4" OF EXPOSED THREADS BENEATH BOTTOM HEX NUT. TORQUE ALL HEX NUTS TO 57 FT-LBS.

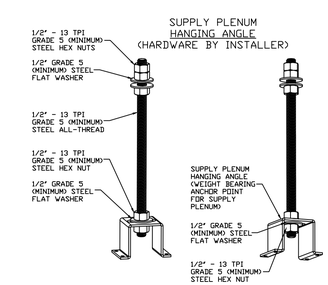


ASSEMBLY INSTRUCTIONS

HANGING ANGLE MUST BE SUPPORTED WITH 1/2" - 13 TPI GRADE 5 (MINIMUM) ALL-THREAD. SANDWICH HANGING ANGLES AND CEILING ANCHOR POINTS WITH 1/2" GRADE 5 (MINIMUM) STEEL FLAT WASHERS AND 1/2" - 13 TPI GRADE 5 (MINIMUM) HEX NUTS AS SHOWN. MUST USE DOUBLED HEX NUT CONFIGURATION ABOVE CEILING ANCHORS. SINGLE HEX NUT BENEATH HANGING ANGLE IS ACCEPTABLE FOR PSP HANGING ANGLES. MAINTAIN 1/4" OF EXPOSED THREADS BENEATH BOTTOM HEX NUT. TORQUE ALL HEX NUTS TO 57 FT-LBS.

CAPTIVEAIRE SYSTEMS RECOMMENDS THE USE OF LISTED, PRE-FABRICATED ROUND GREASE EXHAUST DUCT TO REDUCE STATIC PRESSURE IN THE SYSTEM, MINIMIZE INSTALLATION AND INSPECTION TIMES, AND ENSURE DUCT IS LIQUID TIGHT

### HVAC DISTRIBUTION NOTE

HIGH VELOCITY DIFFUSERS OR HVAC RETURNS SHOULD NOT BE PLACED WITHIN TEN (10) FEET OF THE EXHAUST HOOD. PERFORATED DIFFUSERS ARE RECOMMENDED.

REVISIONS

| DESCRIPTION | DATE: |
|---|---|
| | |
| | |
| | |
| | |


CAPTIVEAIRE
www.captiveaire.com
Montana
123 Birds Eye Trl, Kalispell, MT, 59901 PHONE: FAX: (919) 227-5973 EMAIL: reg88@captiveaire.com


Lewis & Clark Concessions R2
WHITEHALL, MT, 59759

DATE: 7/23/2019
DWG.#: 3914001
DRAWN BY: LAS-88
SCALE: 3/4" = 1'-0"
MASTER DRAWING
SHEET NO. 1

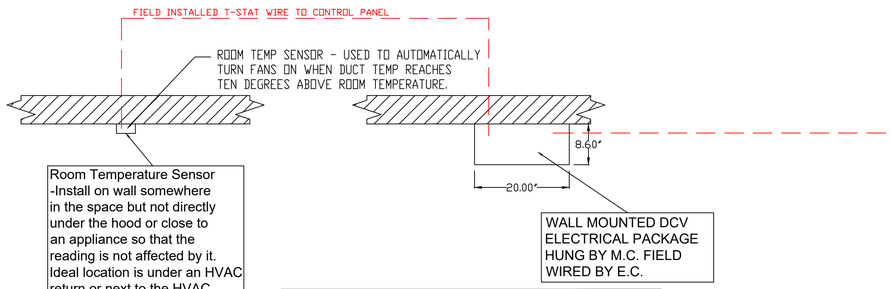


Room Temperature Sensor
-Install on wall somewhere in the space but not directly under the hood or close to an appliance so that the reading is not affected by it. Ideal location is under an HVAC return or next to the HVAC thermostat.

WALL MOUNTED DCV ELECTRICAL PACKAGE HUNG BY M.C. FIELD WIRED BY E.C.

Wall mounted Demand Ventilation Control system includes controls for (1) exhaust fan and (1) Supply Fan.
This system will modulate the exhaust air flow based on duct temperature. System is designed to auto activate based on differential between room temp and duct temp.
This system meets the IMC 507.2.1.1 code requirement.

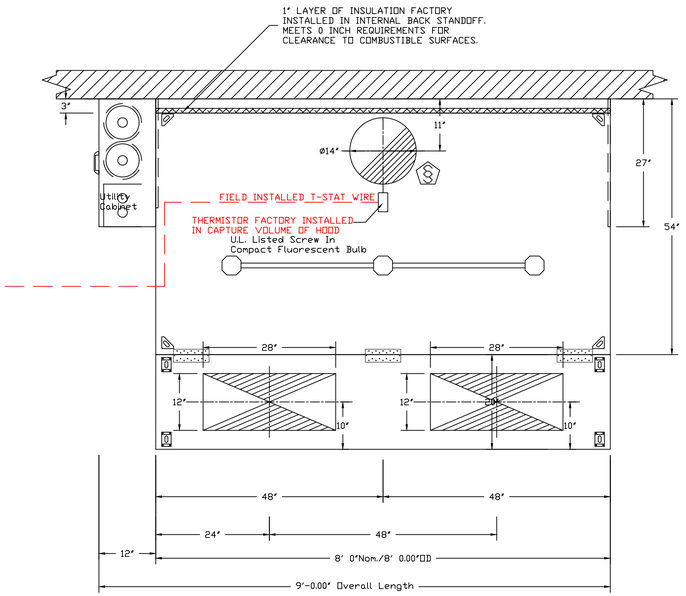


PLAN VIEW – Hood #1
8' 0.00" LONG 5412SND-2-PSP-F

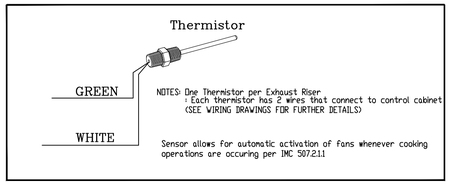


NOTES: One Thermistor per Exhaust Riser
: Each thermistor has 2 wires that connect to control cabinet (SEE WIRING DRAWINGS FOR FURTHER DETAILS)

Sensor allows for automatic activation of fans whenever cooking operations are occuring per IMC 507.2.1.1

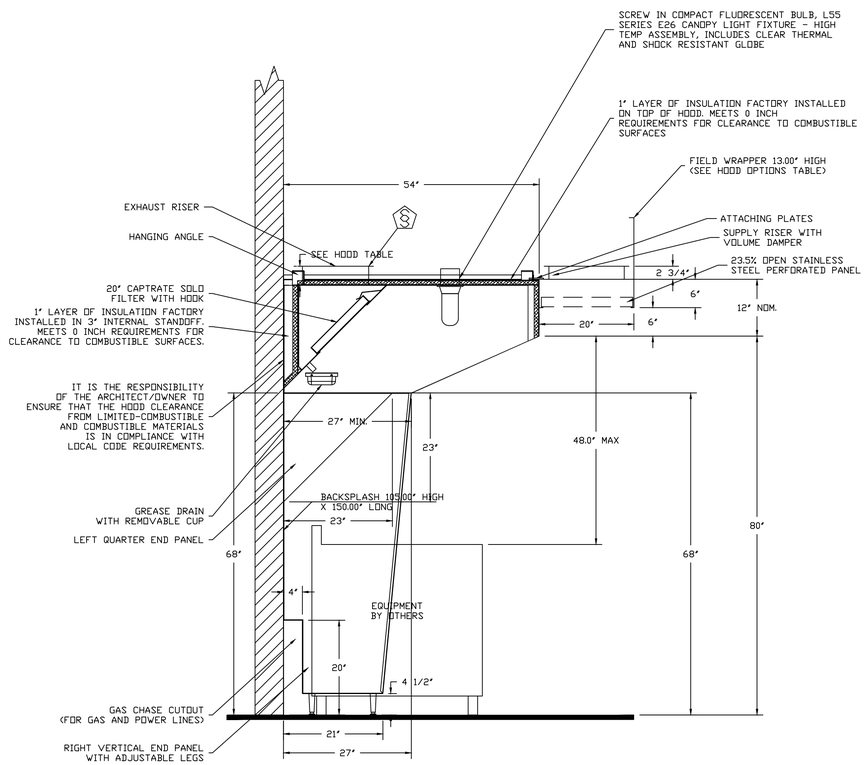


*SECTION VIEW – MODEL 5412SND-2-PSP-F*
*HOOD – #1*

## SND-2 Series with PSP Accessory Specification

The SND-2 series hood with PSP accessory is a low proximity compensating hood system. The hood shall have the size, shape and performance specified on drawings.

Construction shall be type 430 stainless steel with a #3 or #4 polish where exposed. Individual component construction shall be determined by the manufacturer and ETL. Construction shall be dependent on the structural application to minimize distortion and other defects. All seams, joints and penetrations of the hood enclosure to the lower outermost perimeter that directs and captures grease-laden vapor and exhaust gases shall have a liquid-tight continuous external weld in accordance with NFPA 96. Hood shall be wall type with fully welded 10 gauge corner hanging angles. Corner hanging angles have a .625 x 1.500 slot pre-punched at the factory, allowing hanging rods to be used for quick and safe installations. Hanging rod and connection is provided by and installed by others.

Ventilator shall be furnished with U.L. classified aluminum baffle filters, supplied in size and quantity as required by ventilator. The filters shall extend the full length of the hood and the filler panels shall not be more than 6" in width.

The hood manufacturer shall supply complete computer generated submittal drawings including hood section view(s) and hood plan view(s). These drawings must be available to the engineer, architect and owner for their use in construction, operation and maintenance.

Exhaust duct collar to be 4" high with 1" flange. Duct sizes, CFM and static pressure requirements shall be as shown on drawings. Static pressure requirements shall be precise and accurate; air velocity and volume information shall be accurate within 1-ft increments along the length of the ventilator.

U.L. incandescent light fixtures and globes shall be installed and pre-wired to a junction box. The light fixtures shall be installed with a maximum of 4'0" spacing on center and allow up to a 100 watt standard light bulb.

The hood shall have:
-A double wall insulated front to eliminate condensation and increase rigidity. The insulation shall have a flexural modulus of 475 EI, meet UL 181 requirements and be in accordance with NFPA 90A and 90B.
-An integral front baffle to direct grease laden vapors toward the exhaust filter bank.
-A built-in wiring chase provided for outlets and electrical controls on the hood face and shall not penetrate the capture area or require an external chaseway.
-Low velocity make-up air (up to 90%) is provided through front and side plenums (PSP accessory).
-A removable grease cup for easy cleaning.

The hood shall be ETL Listed as "Exhaust Hood Without Exhaust Damper", ETL Sanitation Listed and built in accordance with NFPA 96. The hood shall be listed for 450°F cooking surfaces at 228 CFM/ft and 600°F cooking surfaces at 294 CFM/ft.

**REVISIONS**

| | DESCRIPTION | DATE: |
|---|---|---|
| △ | | |
| △ | | |
| △ | | |
| △ | | |


CAPTIVEAIRE
www.captiveaire.com
Montana
123 Birds Eye Trl, Kalispell, MT, 59901 PHONE: FAX: (919) 227-5973 EMAIL: reg88@captiveaire.com


Lewis & Clark Concessions R2
WHITEHALL, MT, 59759

**DATE:** 7/23/2019

**DWG.#:** 3914001

**DRAWN BY:** LAS-88

**SCALE:** 3/4" = 1'-0"

**MASTER DRAWING**

**SHEET NO.** 2

## SPECIFICATIONS

THE RESTAURANT FIRE SUPPRESSION SYSTEM SHALL BE THE PRE-ENGINEERED TYPE WITH A FIXED NOZZLE AGENT DISTRIBUTION NETWORK. IT SHALL BE LISTED WITH UNDERWRITERS LABORATORIES, INC. (UL)

THE SYSTEM SHALL BE CAPABLE OF AUTOMATIC DETECTION AND ACTUATION WITH LOCAL OR REMOTE MANUAL ACTUATION. ACCESSORIES SHALL BE AVAILABLE FOR MECHANICAL OR ELECTRICAL GAS LINE SHUT-OFF APPLICATIONS.

THE EXTINGUISHING AGENT SHALL BE A POTASSIUM CARBONATE, POTASSIUM ACETATE-BASED FORMULATION DESIGNED FOR FLAME KNOCKDOWN AND SECUREMENT OF GREASE RELATED FIRES. IT SHALL BE AVAILABLE IN PLASTIC CONTAINERS WITH INSTRUCTIONS FOR LIQUID AGENT HANDLING AND USAGE.

THE REGULATED RELEASE MECHANISM SHALL BE COMPATIBLE WITH A FUSIBLE LINK DETECTION SYSTEM. THE FUSIBLE LINK SHALL BE SELECTED AND INSTALLED ACCORDING TO THE OPERATING TEMPERATURE IN THE VENTILATING SYSTEM. THE FUSIBLE LINK SHALL BE SUPPORTED BY A DETECTOR BRACKET/ LINKAGE ASSEMBLY.

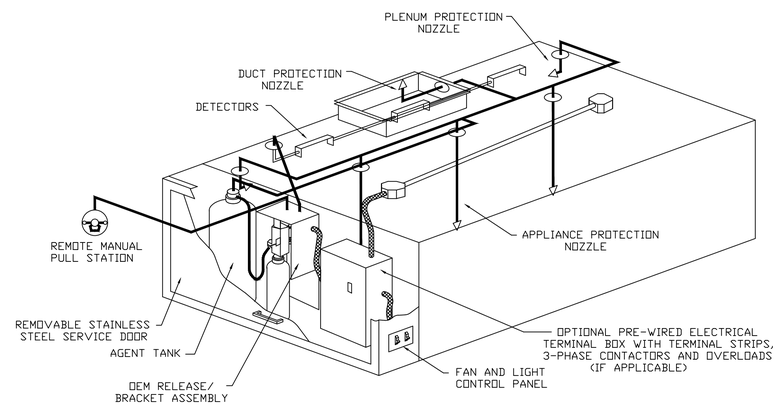


*TYPICAL ANSUL R-102 SYSTEM LAYOUT*

**REVISIONS**

| | DESCRIPTION | DATE: |
|---|---|---|
| △ | | |
| △ | | |
| △ | | |
| △ | | |


CAPTIVEAIRE
www.captiveaire.com
Montana
123 Birds Eye Trl, Kalispell, MT. 59901 PHONE: FAX: (919) 227-5973 EMAIL: reg88@captiveaire.com


Lewis & Clark Concessions R2
WHITEHALL, MT, 59759

**DATE:** 7/23/2019

**DWG.#:** 3914001

**DRAWN BY:** LAS-88

**SCALE:** 3/4" = 1'-0"

**MASTER DRAWING**

**SHEET NO.** 3

## EXHAUST FAN INFORMATION – Job#3914001

| FAN UNIT NO. | TAG | FAN UNIT MODEL # | CFM | ESP. | RPM | H.P. | B.H.P. | ø | VOLT | FLA | DISCHARGE VELOCITY | WEIGHT (LBS.) | SONES |
|---|---|---|---|---|---|---|---|---|---|---|---|---|---|
| 1 | | DU85HFA | 1912 | 1.036 | 1445 | 1.000 | 0.5090 | 1 | 208 | 6.1 | 605 FPM | 132 | 17.6 |

## MUA FAN INFORMATION – Job#3914001

| FAN UNIT NO. | TAG | FAN UNIT MODEL # | BLOWER | HOUSING | MIN CFM | DESIGN CFM | ESP. | RPM | H.P. | B.H.P. | ø | VOLT | FLA | EVAP COOLER ENTERING DB TEMP. | EVAP COOLER ENTERING WB TEMP. | EVAP COOLER LEAVING DB TEMP. | EVAP COOLER LEAVING WB TEMP. | WEIGHT (LBS.) | SONES |
|---|---|---|---|---|---|---|---|---|---|---|---|---|---|---|---|---|---|---|---|
| 2 | | A1-15D | 15MF-1-MOD | A1 | 0 | 1530 | 0.350 | 1569 | 1.000 | 0.5220 | 1 | 208 | 6.1 | 90.0°F | 57.0°F | 68.0°F | 57.0°F | 506 | 18.7 |

## FAN OPTIONS

| FAN UNIT NO. | TAG | OPTION (Qty. – Descr.) |
|---|---|---|
| 1 | | 1 – Grease Box |
| | | 1 – Full Crating For Exhaust Fans |
| | | 1 – Fan Base Ceramic Seal – Ship Loose – For Grease Ducts |
| | | 1 – ECM Wiring Package-Exhaust – PWM Signal from ECPM03 Prewire (NIDEC Motor) |
| 2 | | 1 – Full Crating For Untempered Fans |
| | | 1 – Evaporative Cooler Wiring Harness |
| | | 1 – Freeze Protection Drain Kit for Evaporative Coolers |
| | | 1 – Gravity Backdraft Damper for Size 1 Housing |
| | | 1 – ECM Wiring Package-Supply – PWM Signal from ECPM03 Prewire (NIDEC Motor) |

## FAN ACCESSORIES

| FAN UNIT NO. | TAG | EXHAUST | | | SUPPLY | | | |
|---|---|---|---|---|---|---|---|---|
| | | GREASE CUP | GRAVITY DAMPER | WALL MOUNT | SIDE DISCHARGE | GRAVITY DAMPER | MOTORIZED DAMPER | WALL MOUNT |
| 1 | | YES | | | | | | |
| 2 | | | | | | YES | | |

## CURB ASSEMBLIES

| NO. | ON FAN | WEIGHT | ITEM | SIZE |
|---|---|---|---|---|
| 1 | # 1 | 36 LBS | Curb | 23.000"W x 23.000"L x 20.000"H Vented Hinged |
| 2 | # 2 | 39 LBS | Curb | 21.000"W x 21.000"L x 20.000"H |
| | # 2 | | Rail | 4.000"W x 4.000"L x 36.000"H |

FAN #1 DU85HFA – EXHAUST FAN

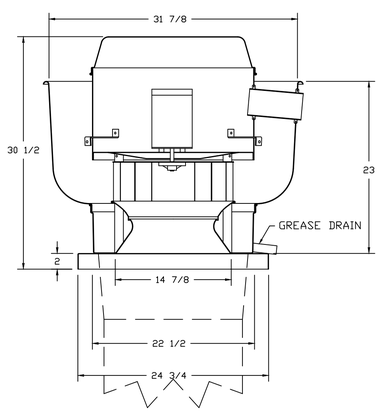


FEATURES:

- DIRECT DRIVE CONSTRUCTION (NO BELTS/PULLEYS)
- ROOF MOUNTED FANS
- RESTAURANT MODEL
- UL705 AND UL762 AND ULC-S645
- VARIABLE SPEED CONTROL
- INTERNAL WIRING
- WEATHERPROOF DISCONNECT
- THERMAL OVERLOAD PROTECTION (SINGLE PHASE)
- HIGH HEAT OPERATION 300°F (149°C)
- GREASE CLASSIFICATION TESTING

NORMAL TEMPERATURE TEST
EXHAUST FAN MUST OPERATE CONTINUOUSLY WHILE EXHAUSTING AIR AT 300°F (149°C) UNTIL ALL FAN PARTS HAVE REACHED THERMAL EQUILIBRIUM, AND WITHOUT ANY DETERIORATING EFFECTS TO THE FAN WHICH WOULD CAUSE UNSAFE OPERATION.

ABNORMAL FLARE-UP TEST
EXHAUST FAN MUST OPERATE CONTINUOUSLY WHILE EXHAUSTING BURNING GREASE VAPORS AT 600°F (316°C) FOR A PERIOD OF 15 MINUTES WITHOUT THE FAN BECOMING DAMAGED TO ANY EXTENT THAT COULD CAUSE AN UNSAFE CONDITION.

OPTIONS

GREASE BOX.
FULL CRATING FOR EXHAUST FANS.
FAN BASE CERAMIC SEAL – SHIP LOOSE – FOR GREASE DUCTS.
ECM WIRING PACKAGE-EXHAUST – PWM SIGNAL FROM ECPM03 PREWIRE (NIDEC MOTOR).

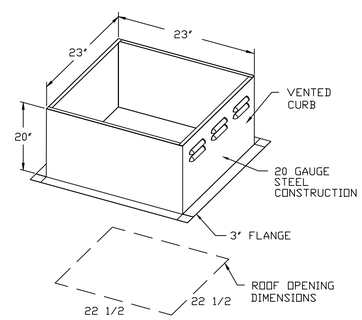


PITCHED CURBS ARE AVAILABLE FOR PITCHED ROOFS.

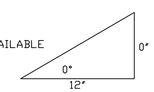


SPECIFY PITCH:
EXAMPLE: 7/12 PITCH = 30° SLOPE

REVISIONS

| DESCRIPTION | DATE: |
|---|---|
| | |
| | |
| | |
| | |


CAPTIVEAIRE
www.captiveaire.com
Montana
123 Birds Eye Trl, Kalispell, MT, 59901 PHONE: FAX: (919) 227-5973 EMAIL: reg88@captiveaire.com


Lewis & Clark Concessions R2
WHITEHALL, MT, 59759

**DATE:** 7/23/2019

**DWG.#:** 3914001

**DRAWN BY:** LAS-88

**SCALE:** 3/4" = 1'-0"

**MASTER DRAWING**

**SHEET NO.**
4

FAN #2 A1-15D - SUPPLY FAN
1. UNTEMPERED SUPPLY UNIT WITH 15' DIRECT DRIVE FAN IN SIZE #1 HOUSING
2. EVAP COOLER (LPD CELDEK) -W/INTAKE HOOD W/EZ FILTERS
3. DOWN DISCHARGE - AIR FLOW RIGHT -> LEFT
4. FULL CRATING FOR UNTEMPERED FANS FOR SHIPPING.
5. 120V WIRING CONNECTION TO ENERGIZE EVAPORATIVE COOLERS FROM UNTEMPERED SUPPLY FANS.
6. FREEZE PROTECTION DRAIN CONTROL KIT FOR EVAPORATIVE COOLERS. INCLUDES 3-WAY WATER SOLENOID VALVE 8316G064 (SHIPPED LOOSE), PRESSURE SWITCH INSTALLED UPSTREAM OF 2WAY SOLENOID IN UNIT, BRASS TEE, 2 NPT HALF INCH NIPPLES, AND TWO STAGE THERMOSTAT T678A1361. FIELD WIRING REQUIRED BY OTHERS FOR 3-WAY VALVE. FOR BOTH CELDEK AND STANDARD V-BANK TYPE CONFIGURATIONS.
7. GRAVITY BACK DRAFT DAMPER, 16' WIDE X 18' HIGH, STANDARD GALVANIZED CONSTRUCTION, 1 1/4' REAR FLANGE, FOR SIZE 1 UNTEMPERED FAN HOUSING (S181)
8. ECM WIRING PACKAGE FOR SUPPLY MOTORS WITH PWM SIGNAL FROM ECPMD3 PREWIRE.

*NOTE: SUPPLY DUCT MUST BE INSTALLED TO MEET SMACNA STANDARDS. A MINIMUM STRAIGHT DUCT LENGTH MUST BE MAINTAINED DOWNSTREAM OF UNIT DISCHARGE AS OUTLINED IN AMCA PUBLICATION 201. DO NOT RELY ON UNIT TO SUPPORT DUCT IN ANY WAY. FAILURE TO PROPERLY SIZE DUCTWORK MAY CAUSE SYSTEM EFFECTS AND REDUCE PERFORMANCE OF THE EQUIPMENT. SUGGESTED STRAIGHT DUCT SIZE IS 14' x 14'

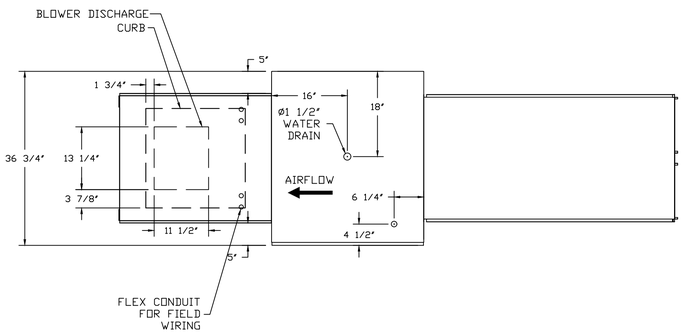


GREASE DUCT & CHIMNEY SPECIFICATIONS:
PROVIDE GREASE DUCT EQUAL TO CAPTIVEAIRE SYSTEMS MODEL "DW" ROUND 20 GAUGE 430 STAINLESS STEEL DUCTWORK. MODEL "DW" IS LISTED TO UL-1978 AND IS INSTALLED USING "V" CLAMP LOCKING CONNECTIONS SEALED WITH 3M FIRE BARRIER 2000 PLUS. MODEL "DW" DOES NOT REQUIRE WELDING PROVIDING IT HAS BEEN INSTALLED PER THE MANUFACTURES INSTALLATION GUIDE.
PROVIDE RATED ACCESS DOORS AT EVERY CHANGE IN DIRECTION AND EVERY 12' ON CENTER. PER MANUFACTURES LISTING MODEL "DW" HORIZONTAL RUNS LESS THAN 75 FT. CAN BE SLOPED 1/16" PER 12", HORIZONTAL RUNS MORE THAN 75 FT. CAN BE SLOPED 3/16" PER 12". DUCT SHOULD BE SLOPED AS MUCH AS POSSIBLE TO REDUCE THE CHANCE OF GREASE ACCUMULATION IN HORIZONTAL RUNS.

IF THE DUCT OR CHIMNEY IS WITHIN 18 INCHES OF COMBUSTIBLE MATERIAL, PROVIDE UL-2221 OR UL-103 HT LISTED DOUBLE WALL GREASE DUCT OR DOUBLE WALL CHIMNEY EQUAL TO CAPTIVEAIRE SYSTEMS MODEL "DW- 2R, 2R TYPE HT, 3R, OR 3Z" ROUND 20 GAUGE 430 STAINLESS INNER DUCT INSULATED WITH A 24 GAUGE 430 STAINLESS OUTER SHELL.

## CUSTOMER APPROVAL TO MANUFACTURE:

Approved as Noted ☐
Approved with NO Exception Taken ☐
Revise and Resubmit ☐
SIGNATURE _____
Your Title _____ Date _____

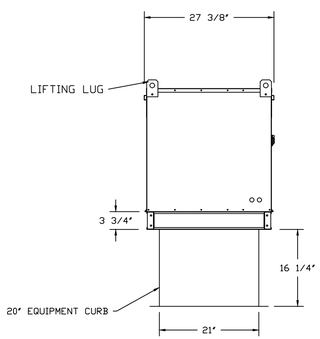


ROOF OPENING 2" SMALLER THAN CURB DIMENSION.

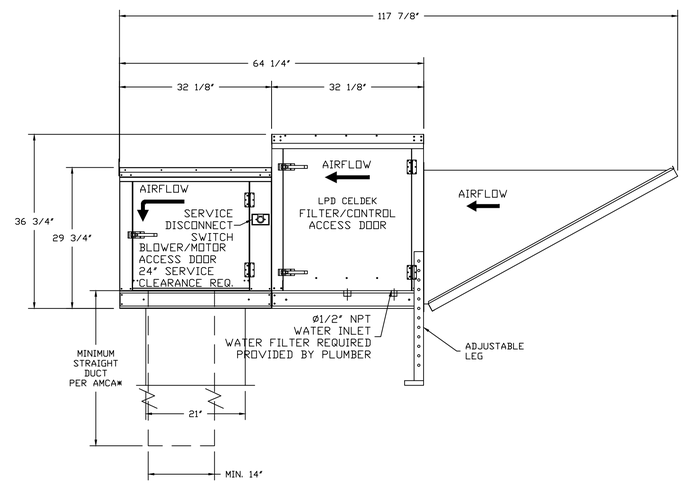


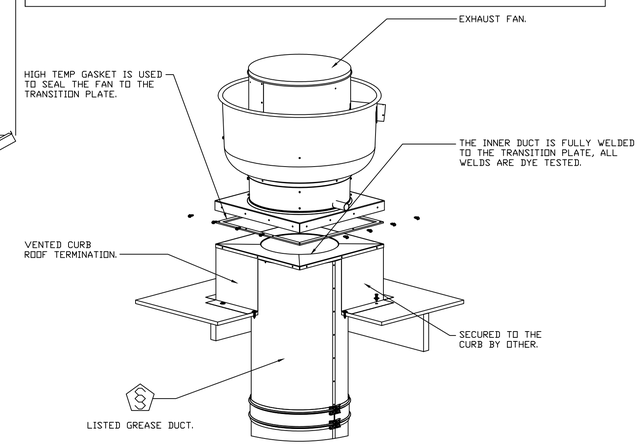


PITCHED CURBS ARE AVAILABLE FOR PITCHED ROOFS.

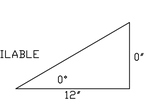


SPECIFY PITCH:
EXAMPLE: 7/12 PITCH = 30° SLOPE

**REVISIONS**

| DESCRIPTION | DATE: |
|---|---|
| | |
| | |
| | |
| | |


CAPTIVEAIRE
www.captiveaire.com
Montana
123 Birds Eye Trl, Kalispell, MT. 59901 PHONE: FAX: (919) 227-5973 EMAIL: reg88@captiveaire.com


Lewis & Clark Concessions R2
WHITEHALL, MT, 59759

**DATE:** 7/23/2019
**DWG.#:** 3914001
**DRAWN BY:** LAS-88
**SCALE:** 3/4" = 1'-0"
**MASTER DRAWING**

**SHEET NO.**
5

## Exhaust Fan Wiring

| | | | |
|---|---|---|---|
| DRAWING NUMBER EXH3914001-1 | SHIP DATE 7/23/2019 | MODEL DU060FA | JOB 3914001 - Lewis & Clark Concessions R2 |

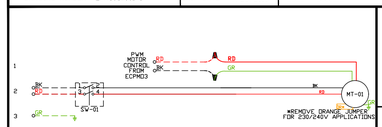


Installed Options

Component Identification

| Label | Description | Location |
|---|---|---|
| MT-01 | Fan Motor | (2) |
| MT-02 | Damper Motor | (2) |
| SV-01 | Main disconnect switch | (2) |

MOTOR INFO

| | |
|---|---|
| EXHAUST | 1HP-208V-3P-6.1FLA |

ELECTRICAL INFORMATION
MOTOR/CTRL CIRCUIT MCP 15A
MOTOR/CTRL MOP 15A

NOTES
- - - DENOTES FIELD WIRING
——— DENOTES INTERNAL WIRING

WIRE COLOR

| | |
|---|---|
| BK - BLACK | YW - YELLOW |
| BL - BLUE | GR - GREEN |
| BR - BROWN | GY - GRAY |
| OR - ORANGE | PR - PURPLE |
| RD - RED | PK - PINK |
| WH - WHITE | |

## AirHandler Wiring

| | | | |
|---|---|---|---|
| DRAWING NUMBER A3914001-2 | SHIP DATE 7/23/2019 | MODEL A1-15D | JOB 3914001 - Lewis & Clark Concessions R2 |

ATTENTION ELECTRICIAN:
DROP FOR DISCONNECT CONNECTION
IS FACTORY SUPPLIED
CONNECT POWER TO THE DROP

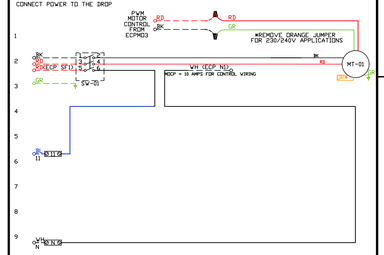


Installed Options

Cooling Interlock

Component Identification

| Label | Description | Location |
|---|---|---|
| MT-01 | Supply motor | (2) |
| SV-01 | Main disconnect switch | (2) |

MOTOR INFO

| | |
|---|---|
| SUPPLY | 1HP-208V-3P-6.1FLA |

ELECTRICAL INFORMATION
MOTOR/CTRL CIRCUIT MCP 15A
MOTOR/CTRL CIRCUIT MOP 15A

NOTES
- - - DENOTES FIELD WIRING
——— DENOTES INTERNAL WIRING

WIRE COLOR

| | |
|---|---|
| BK - BLACK | YW - YELLOW |
| BL - BLUE | GR - GREEN |
| BR - BROWN | GY - GRAY |
| OR - ORANGE | PR - PURPLE |
| RD - RED | PK - PINK |
| WH - WHITE | |

## Evaporative Cooler Wiring

| | | | |
|---|---|---|---|
| DRAWING NUMBER EC3914001-2 | SHIP DATE 7/23/2019 | MODEL A1-15D | JOB 3914001 - Lewis & Clark Concessions R2 |

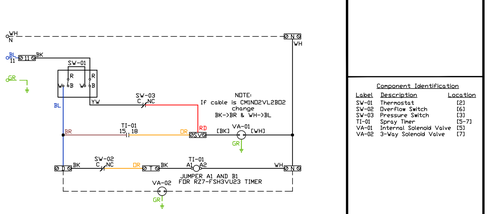


POINT-TO-POINT SUMMARY OF DRAIN CONNECTION

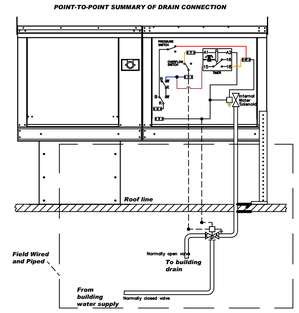


Installed Options

Component Identification

| Label | Description | Location |
|---|---|---|
| SV-01 | Thermostat | (2) |
| SV-02 | Overflow Switch | (6) |
| SV-03 | Pressure Switch | (3) |
| TI-01 | Spray Timer | (3-7) |
| VA-01 | Internal Solenoid Valve | (5) |
| VA-02 | 3-Way Solenoid Valve | (7) |

NOTES
- - - DENOTES FIELD WIRING
——— DENOTES INTERNAL WIRING

WIRE COLOR

| | |
|---|---|
| BK - BLACK | YW - YELLOW |
| BL - BLUE | GR - GREEN |
| BR - BROWN | GY - GRAY |
| OR - ORANGE | PR - PURPLE |
| RD - RED | PK - PINK |
| WH - WHITE | |

REVISIONS

| DESCRIPTION | DATE: |
|---|---|
| | |
| | |
| | |
| | |


CAPTIVEAIRE
www.captiveaire.com
Montana
123 Birds Eye Trl, Kalispell, MT. 59901 PHONE: FAX: (919) 227-5973 EMAIL: reg88@captiveaire.com


Lewis & Clark Concessions R2
WHITEHALL, MT, 59759

**DATE:** 7/23/2019

**DWG.#:** 3914001

**DRAWN BY:** LAS-88

**SCALE:** 3/4" = 1'-0"

**MASTER DRAWING**

**SHEET NO.** 6

*ELECTRICAL PACKAGE – Job#3914001*

| NO. | TAG | PACKAGE # | LOCATION | SWITCHES | | OPTION | FANS CONTROLLED | | | | |
|---|---|---|---|---|---|---|---|---|---|---|---|
| | | | | LOCATION | QUANTITY | | TYPE | Φ | H.P. | VOLT | FLA |
| 1 | | DCV-1111 | Wall Mount In SS Box | 05 - SS Wall Mount Box | 1 Light<br>1 Fan | Smart Controls DCV | Exhaust | 1 | 1.000 | 208 | 6.1 |
| | | | | | | | Supply | 1 | 1.000 | 208 | 6.1 |

CASlink Monitor and Control

- Hood control panel to support communications to cloud-based Building Management System.
- Hood Control Panel to allow cloud-based Building Management System to monitor real time parameters outlined as MONITOR in the points list.
- Hood Control Panel to allow cloud-based Building Management System to control parameters outlined as CONTROL in the points list.
- Hood control panel to allow remote changes to system setting such as: VFD Frequencies, ECM speeds, temperature set points, fan and wash schedules, etc.

MONITORING AND CONTROL POINTS LIST

| DCV Packages | Function |
|---|---|
| Room Temperature | MONITOR |
| Duct Temperature(s) | MONITOR |
| MUA Discharge Temperature | MONITOR |
| Kitchen RTU Discharge Temperature | MONITOR |
| Fan Speed | MONITOR |
| Fan Amperage | MONITOR |
| Fan Power | MONITOR |
| VFD Faults | MONITOR |
| Controller Faults | MONITOR |
| Fan Faults | MONITOR |
| Fan Status | MONITOR |
| PCU Faults | MONITOR |
| PCU Filter Clog Percentages | MONITOR |
| Fire Condition | MONITOR |
| CORE Fire System | MONITOR |
| Building Pressures | MONITOR |
| Prep Time Button | MONITOR & CONTROL |
| Fans Button | MONITOR & CONTROL |
| Lights Button | MONITOR & CONTROL |
| Wash Button | MONITOR & CONTROL |

| SC Packages | Function |
|---|---|
| Room Temperature(s) | MONITOR |
| Duct Temperature(s) | MONITOR |
| MUA Discharge Temperature | MONITOR |
| Kitchen RTU Discharge Temperature | MONITOR |
| Controller Faults | MONITOR |
| Fan Faults | MONITOR |
| Fan Status | MONITOR |
| PCU Faults | MONITOR |
| PCU Filter Clog Percentages | MONITOR |
| Fire Condition | MONITOR |
| CORE Fire System | MONITOR |
| Building Pressures | MONITOR |
| Fans Button(s) | MONITOR & CONTROL |
| Lights Button(s) | MONITOR & CONTROL |
| Wash Button | MONITOR & CONTROL |

| JOB NO | MODEL NUMBER | DRAWN BY | SCHEMATIC TYPE |
|---|---|---|---|
| 3914001 | DCV-1111 | | INSTALL |
| JOB NAME | | DATE | DWG NO |
| Lewis & Clark Concessions R2 | | 7/23/2019 | ECP #1-1 |

DESCRIPTION OF OPERATION:
Demand Control Ventilation, w/ control for 1 Exhaust Fan, 1 Supply Fan, Exhaust on in Fire, Lights out in Fire, Fans modulate based on duct temperature. INVERTER DUTY 3 PHASE MOTOR REQUIRED FOR USE WITH VFD. Room temperature sensor shipped loose for field installation;Verify distance between VFD and Motor; additional cost could apply if distance exceeds 50 feet.

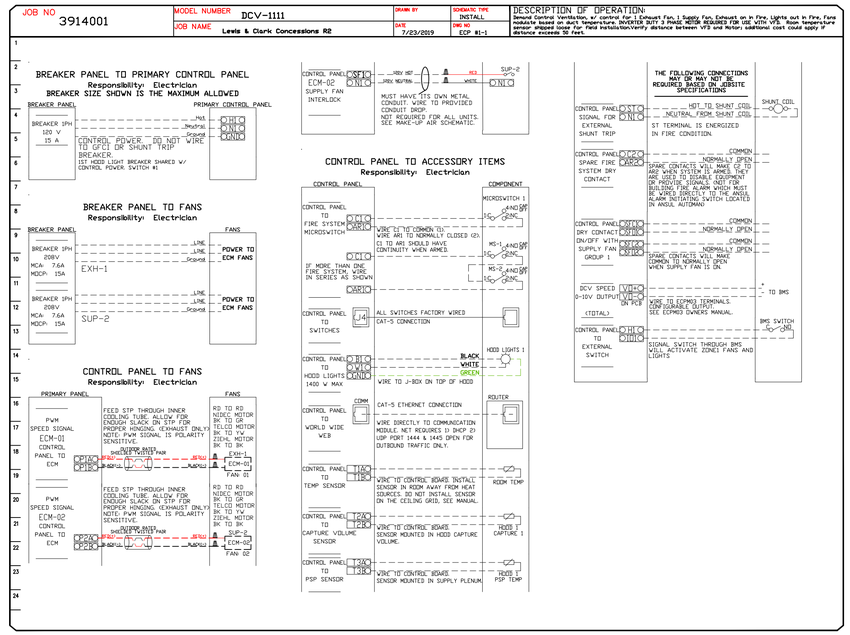


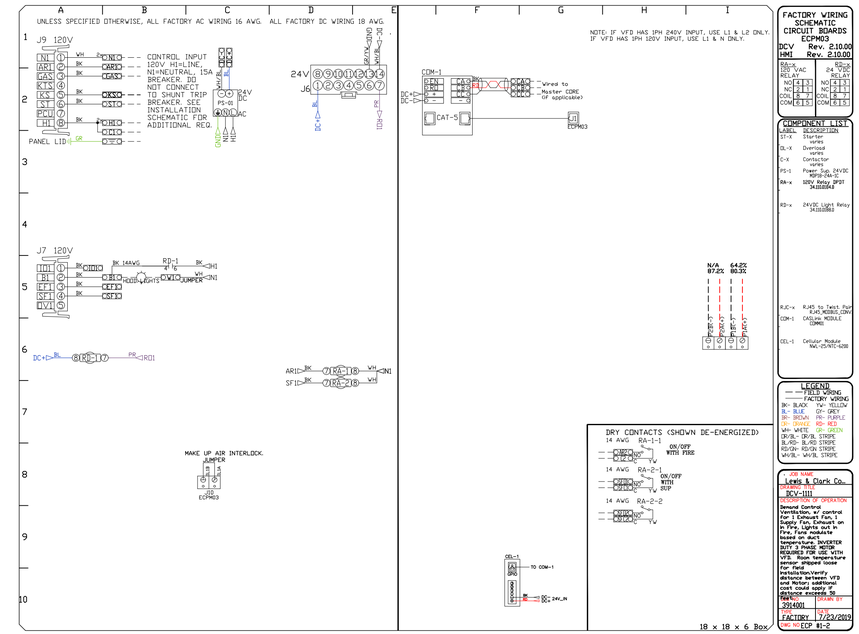


FACTORY WIRING SCHEMATIC CIRCUIT BOARDS ECPM03
DCV Rev. 2.10.00
HMI Rev. 2.10.00

| RA-x 120 VAC RELAY | | RD-x 24 VDC RELAY | |
|---|---|---|---|
| NO | 4 3 | NO | 4 3 |
| NC | 2 1 | NC | 2 1 |
| COIL | 8 7 | COIL | 8 7 |
| COM | 6 5 | COM | 6 5 |

COMPONENT LIST

| LABEL | DESCRIPTION |
|---|---|
| ST-X | Starter varies |
| C-X | Contactor varies |
| DM-X | VFD varies |
| LR-X | Line/Load Reactor varies |
| PS-1 | Power Sup. 24VDC MDR-240-24 |
| RA-x | 120V Relay DPDT 3A120VAC |
| RD-x | 24VDC Light Relay 3A120VAC |
| RJC-x | RJ45 to Jack Jumper 4ft MOD-RJ45-4FT |
| CDM-1 | CELLULAR MODULE CDMA |
| CEL-1 | Cellular Module WAC-CS7470-G08 |

LEGEND
FIELD WIRING
FACTORY WIRING
BK- BLACK YW- YELLOW
BL- BLUE OR- ORANGE
BR- BROWN PR- PURPLE
GR- GRAY RD- RED
WH- WHITE GR- GREEN
BK/BL- BK/BL STRIPE
BL/RD- BL/RD STRIPE
RD/GN- RD/GN STRIPE
WH/BL- WH/BL STRIPE

JOB NAME: Lewis & Clark Co.
DRAWING TITLE: DCV-1111
DESCRIPTION OF OPERATION: Demand Control Ventilation, w/ control for 1 Exhaust Fan, 1 Supply Fan, Exhaust on in Fire, Lights out in Fire, Fans modulate based on duct temperature. INVERTER DUTY 3 PHASE MOTOR REQUIRED FOR USE WITH VFD. Room temperature sensor shipped loose for field installation;Verify distance between VFD and Motor; additional cost could apply if distance exceeds 50 feet.
JOB NO: 3914001
DRAWN BY:
DATE: FACTORY 7/23/2019
DWG NO: ECP #1-2

MOTOR POWER CIRCUITS SEE INSTALLATION DIAGRAM FOR FIELD WIRING REQUIREMENTS.

18 x 18 x 6 Box

FACTORY WIRING SCHEMATIC CIRCUIT BOARDS ECPM03
DCV Rev. 2.10.00
HMI Rev. 2.10.00

| RA-x 120 VAC RELAY | | RD-x 24 VDC RELAY | |
|---|---|---|---|
| NO | 4 3 | NO | 4 3 |
| NC | 2 1 | NC | 2 1 |
| COIL | 8 7 | COIL | 8 7 |
| COM | 6 5 | COM | 6 5 |

COMPONENT LIST

| LABEL | DESCRIPTION |
|---|---|
| ST-X | Starter varies |
| C-X | Contactor varies |
| DM-X | VFD varies |
| LR-X | Line/Load Reactor varies |

LEGEND
FIELD WIRING
FACTORY WIRING
BK- BLACK YW- YELLOW
BL- BLUE OR- ORANGE
BR- BROWN PR- PURPLE
GR- GRAY RD- RED
WH- WHITE GR- GREEN
BK/BL- BK/BL STRIPE
BL/RD- BL/RD STRIPE
RD/GN- RD/GN STRIPE
WH/BL- WH/BL STRIPE

JOB NAME: Lewis & Clark Co.
DRAWING TITLE: DCV-1111
DESCRIPTION OF OPERATION: Demand Control Ventilation, w/ control for 1 Exhaust Fan, 1 Supply Fan, Exhaust on in Fire, Lights out in Fire, Fans modulate based on duct temperature. INVERTER DUTY 3 PHASE MOTOR REQUIRED FOR USE WITH VFD. Room temperature sensor shipped loose for field installation;Verify distance between VFD and Motor; additional cost could apply if distance exceeds 50 feet.
JOB NO: 3914001
DRAWN BY:
DATE: FACTORY 7/23/2019
DWG NO: ECP #1-3

**REVISIONS**

| DESCRIPTION | DATE: |
|---|---|
| | |
| | |
| | |
| | |


CAPTIVEAIRE
www.captiveaire.com
Montana
123 Birds Eye Trl, Kalispell, MT, 59901 PHONE: FAX: (919) 227-5973 EMAIL: reg88@captiveaire.com


Lewis & Clark Concessions R2
WHITEHALL, MT, 59759

**DATE:** 7/23/2019

**DWG.#:** 3914001

**DRAWN BY:** LAS-88

**SCALE:** 3/4" = 1'-0"

**MASTER DRAWING**

**SHEET NO.** 7

## Demand Control Ventilation Hood Control Panel Specifications:

- Controls shall be listed by ETL (UL 508A) and shall comply with demand ventilation system turndown requirements outlined in IECC 403.2.8 (2015).
- The control enclosure shall be NEMA 1 rated and listed for installation inside of the exhaust hood utility cabinet. The control enclosure may be constructed of stainless steel or painted steel.
- Temperature probe(s) located in the exhaust duct riser(s) shall be constructed of stainless steel.
- A digital controller shall be provided to activate the hood exhaust fans dynamically based on a fixed differential between the ambient and duct temperatures sensors. This function shall meet the requirements of IMC 507.1.1.
- A digital controller shall provide adjustable hysteresis settings to prevent cycling of the fans after the cooking appliances have been turned off and/or the heat in the exhaust system is reduced.
- A digital controller shall provide an adjustable minimum fan run-time setting to prevent fan cycling.
- Variable Frequency Drives (VFDs) shall be provided for fans as required. The digital controller shall modulate the VFDs between a minimum setpoint and a maximum setpoint on demand. The duct temperature sensor input(s) to the digital controller shall be used to calculate the speed reference signal.
- The VFD speed range of operation shall be from 0% to 100% for the system, with the actual minimum speed set as required to meet minimum ventilation requirements.
- An internal algorithm to the digital controller shall modulate supply fan VFD speed proportional to all exhaust fans that are located in the same fan group as the supply fan.
- The system shall operate in PREP MODE during light cooking load or COOL DOWN MODE when sufficient heat remains underneath the hood system after cooking operations have completed. Operation during either of these periods will disable the supply fans and provide an exhaust fan speed that is equal to the minimum ventilation requirement.
- A digital controller shall disable the supply fan(s), activate the exhaust fan(s), activate the appliance shunt trip, and disable an electric gas valve automatically when fire condition is detected on a covered hood.
- A digital controller shall allow for external BMS fan control via Dry Contact (external control shall not override fan operation logic as required by code).
- An LCD interface shall be provided with the following features:
  a. On/Off push button fan & light switch activation
  b. Integrated gas valve reset for electronic gas valves (no reset relay required)
  c. VFD Fault display with audible & visual alarm notification
  d. Duct temperature sensor failure detection with audible & visual alarm notification
  e. Mis-wired duct temperature sensor detection with audible & visual alarm notification
  f. A single low voltage Cat-5 RJ45 wiring connection
  g. An energy savings indicator that utilizes measured kWh from the VFDs

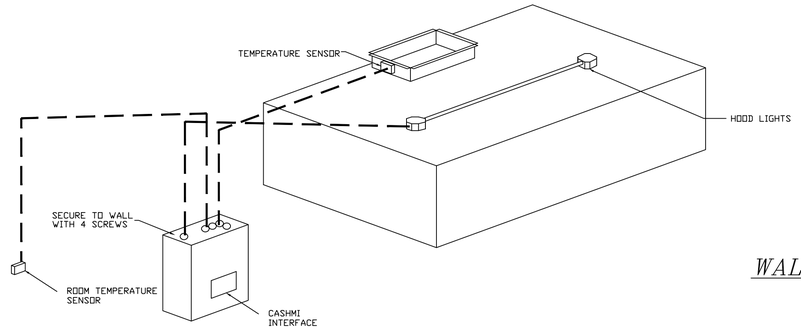


*WALL MOUNTED CONTROL CENTER*

## Sequence of Operations:

The hood control panel is capable of operating in one or more of the following states at any given time:

- Automatic: The system operates based on the differential between room temperature and the temperature at the hood cavity or exhaust duct collar. Fans activate at a configurable temperature differential threshold. Depending on the job configuration each fan zone can be configured as static or dynamic. These terms refer to whether a variable motor (such as EC Motors or VFD driven motors) modulate with temperature. If the panel is equipped with variable speed fans and the zone is defined as 'dynamic', these will modulate within a user-defined range based on the temperature differential. Panels equipped with variable speed fans and a fan zone defined as 'static', fans will run at a set speed calculated for the drive. Demand control ventilation systems are capable of modulating exhaust and make up air fan speeds per the requirements outlined in IECC 403.2.8.
- Manual: The system operates based on human input from an HMI.
- Schedule: A weekly schedule can be set to run fans for a specified period throughout the day. There are three occupied times per day to allow for the user to set up a time that is suitable to their needs. Any time that is within the defined occupied time, the system will run at modulation mode and follow the fan procedure algorithm based on temperature during this time. During unoccupied time, the system will have an extra offset to prevent unintended activation of the system during a time where the system is not being occupied.
- Other: The system operates based on the input from an external source (DDC, BMS or hard-wired interlock)

## *WALL MOUNTED DCV SYSTEM*

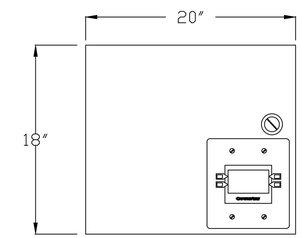


**REVISIONS**

| | DESCRIPTION | DATE: |
|---|---|---|
| △ | | |
| △ | | |
| △ | | |
| △ | | |


CAPTIVEAIRE
www.captiveaire.com
Montana
123 Birds Eye Trl, Kalispell, MT, 59901 PHONE: FAX: (919) 227-5973 EMAIL: reg88@captiveaire.com


Lewis & Clark Concessions R2
WHITEHALL, MT, 59759

**DATE:** 7/23/2019

**DWG.#:** 3914001

**DRAWN BY:** LAS-88

**SCALE:** 3/4" = 1'-0"

**MASTER DRAWING**

**SHEET NO.** 8

## *DuctWork #1 Parts – Job#3914001*

| Tag | Part # | CFM | S.P. | Weight | Velocity | QTY | Description |
|---|---|---|---|---|---|---|---|
| P1 | DW1429DWLT-2R-S | 1800 | -0.0121 | 40.99 | 1683.79 | 1 | Double Wall Duct - 14' Inner Duct, 29' long - 2 Layers Reduced Clearance - 18' Stainless Steel Outer Shell. |
| P2<br>Assembled w/P3 | DW1427DWAJDTP-2R-S | 1800 | -0.0079 | 51.88 | 1683.79 | 1 | Double Wall Adjustable Duct Transition Plate - 14' Inner Duct, 27' long - 2 Layers Reduced Clearance - 18' Stainless Steel Outer Shell. Min Length = 11' / Max Length = 24.5' / Adjustment = 6.5' / Adjustable Section May Need To Be Cut.<br>Includes single and double wall 'V' Clamps. |
| P3<br>Assembled w/P2 | DW2314TP | 1800 | 0 | 8.49 | 1683.79 | 1 | Duct to Curb Transition, 23' Curb to 14' Duct, 16 GA Aluminized. Used on BDU15, DU75 & 85. |
| System at P3 | | 1800 | -0.7175 | | | | |
| | DW18DWRISER-2R-S | | | 8.15 | | 1 | Double Wall Riser Cover - Used On 14' Inner Riser, 4' long - 2 Layers Reduced Clearance - 18' Stainless Steel Outer Riser Shell Assembly. Includes Insulation & Single V Clamps For Inner & Outer Connections. |
| | 3M-2000PLUS | | | 0.80 | | 1 | Duct - 3M Fire Barrier 2000 Plus Silicone - Used as sealant to Seal Duct Joints. |
| Total Weight | | | | 110.31 | | | |

SINGLE WALL FACTORY BUILT DUCTWORK

- ALL DUCTWORK IS REQUIRED TO BE INSTALLED WITH THE MAXIMUM SUPPORT SPACING LISTED BELOW.
- FOR A COMPLETE LIST OF APPROVED SUPPORT METHODS, SEE THE INSTALLATION AND OPERATION MANUAL.
- DUCTWORK SHALL SLOPE NOT LESS THAN 1/16' PER LINEAR FOOT TOWARDS THE HOOD OR AN APPROVED GREASE COLLECTION RESERVOIR.
- WHERE HORIZONTAL DUCTS EXCEED 75 FEET IN LENGTH, THE SLOPE SHALL NOT BE LESS THAN 3/16' PER LINEAR FOOT.

| DUCT DIAMETER | HORIZONTAL SUPPORT (ft) | VERTICAL WALL SUPPORT (ft) | VERTICAL CURB SUPPORT (ft) |
|---|---|---|---|
| 8' | 10' | 10' | 24' |
| 10' | 10' | 10' | 24' |
| 12' | 10' | 10' | 24' |
| 14' | 10' | 10' | 24' |
| 16' | 10' | 10' | 24' |
| 18' | 10' | 10' | 24' |
| 20' | 10' | 10' | 24' |
| 22' | 10' | 10' | 24' |
| 24' | 10' | 10' | 24' |

DOUBLE WALL FACTORY BUILT DUCTWORK

- ALL DUCTWORK IS REQUIRED TO BE INSTALLED WITH THE MAXIMUM SUPPORT SPACING LISTED BELOW.
- FOR A COMPLETE LIST OF APPROVED SUPPORT METHODS, SEE THE ENTIRE INSTALLATION AND OPERATION MANUAL
- DUCTWORK SHALL SLOPE NOT LESS THAN 1/16' PER LINEAR FOOT TOWARDS THE HOOD OR AN APPROVED GREASE COLLECTION RESERVOIR.
- WHERE HORIZONTAL DUCTS EXCEED 75 FEET IN LENGTH, THE SLOPE SHALL NOT BE LESS THAN 3/16' PER LINEAR FOOT.

| HORIZONTAL | |
|---|---|
| DUCT DIAMETER | SUPPORT SPACING (ft) |
| 8' | 7' |
| 10' | 7' |
| 12' | 7' |
| 14' | 7' |
| 16' | 7' |
| 18' | 5' |
| 20' | 5' |
| 22' | 5' |
| 24' | 5' |

| VERTICAL | | | |
|---|---|---|---|
| TYPE | WALL SUPPORT (ft) | CURB SUPPORT (ft) | FLOOR SUPPORT (ft) |
| 2R & 2R HT | 20' | 24' | 24' |
| 3R | 10' | 24' | 24' |
| 3Z | 10' | 24' | 24' |

DuctWork #1 SE View

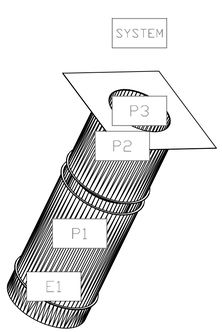


DuctWork #1 Front View

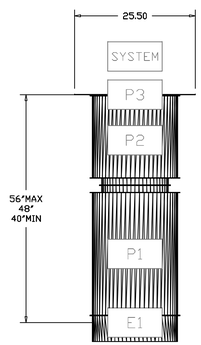


DuctWork #1 Top View

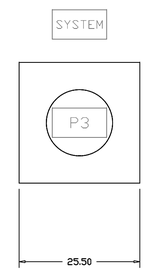


DuctWork #1 Side View

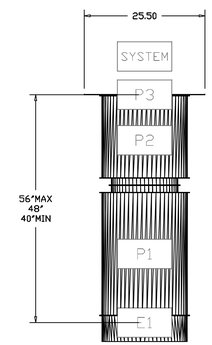


| REVISIONS | |
|---|---|
| DESCRIPTION | DATE: |
| | |
| | |
| | |
| | |


CAPTIVEAIRE
www.captiveaire.com
Montana
123 Birds Eye Trl, Kalispell, MT, 59901 PHONE: FAX: (919) 227-5973 EMAIL: reg88@captiveaire.com


Lewis & Clark Concessions R2
WHITEHALL, MT, 59759

DATE: 7/23/2019

DWG.#: 3914001

DRAWN BY: LAS-88

SCALE: 3/4" = 1'-0"

MASTER DRAWING

SHEET NO.
9

System Design Verification (SDV)

If ordered, CAS Service will perform a System Design Verification (SDV) once all equipment has had a complete start up per the Operation and Installation Manual. Typically, the SDV will be performed after all inspections are complete.

Any field related discrepancies that are discovered during the SDV will be brought to the attention of the general contractor and corresponding trades on site. These issues will be documented and forwarded to the appropriate sales office. If CAS Service has to resolve a discrepancy that is a field issue, the general contractor will be notified and billed for the work. Should a return trip be required due to any field related discrepancy that cannot be resolved during the SDV, there will be additional trip charges.

During the SDV, CAS Service will address any discrepancy that is the fault of the manufacturer. Should a return trip be required, the general contractor and appropriate sales office will be notified. There will be no additional charges for manufacturer discrepancies.

**REVISIONS**

| | DESCRIPTION | DATE: |
|---|---|---|
| △ | | |
| △ | | |
| △ | | |
| △ | | |

CAPTIVEAIRE
www.captiveaire.com
Montana
123 Birds Eye Tri, Kalispell, MT. 59901 PHONE: FAX: (919) 227-5973 EMAIL: reg88@captiveaire.com

Lewis & Clark Concessions R2
WHITEHALL, MT, 59759

**DATE:** 7/23/2019

**DWG.#:** 3914001

**DRAWN BY:** LAS-88

**SCALE:** 3/4" = 1'-0"

**MASTER DRAWING**

**SHEET NO.**
10