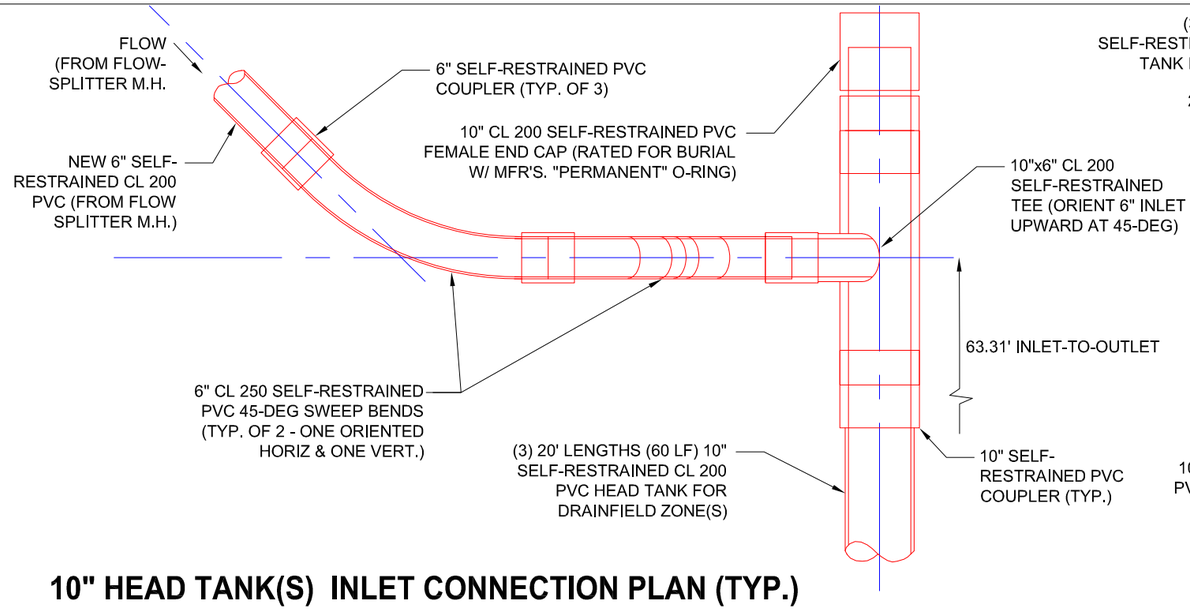

10" HEAD TANK(S) INLET CONNECTION PLAN (TYP.)

scale: ½" = 1'-0"

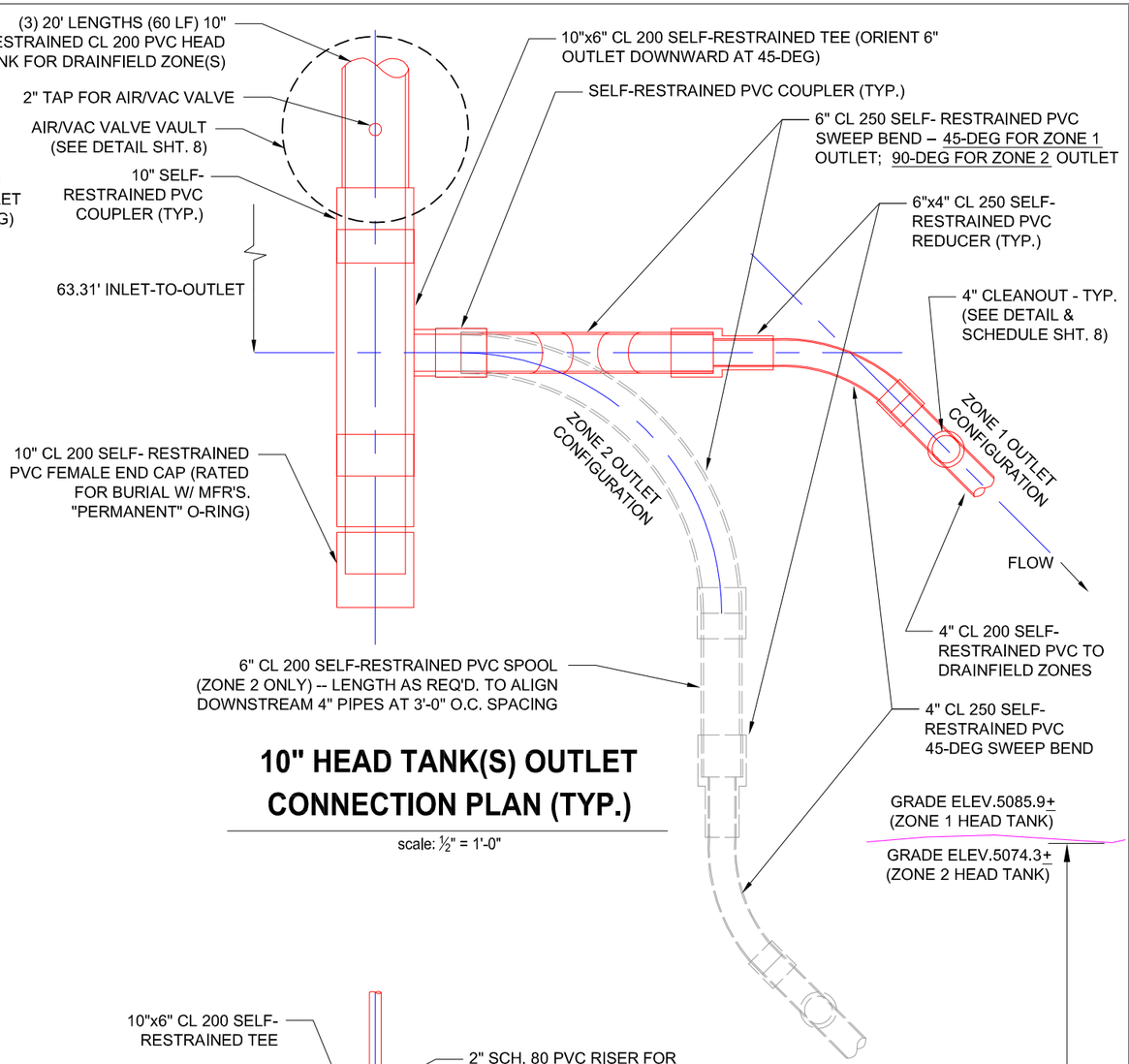

10" HEAD TANK(S) OUTLET CONNECTION PLAN (TYP.)

scale: ½" = 1'-0"

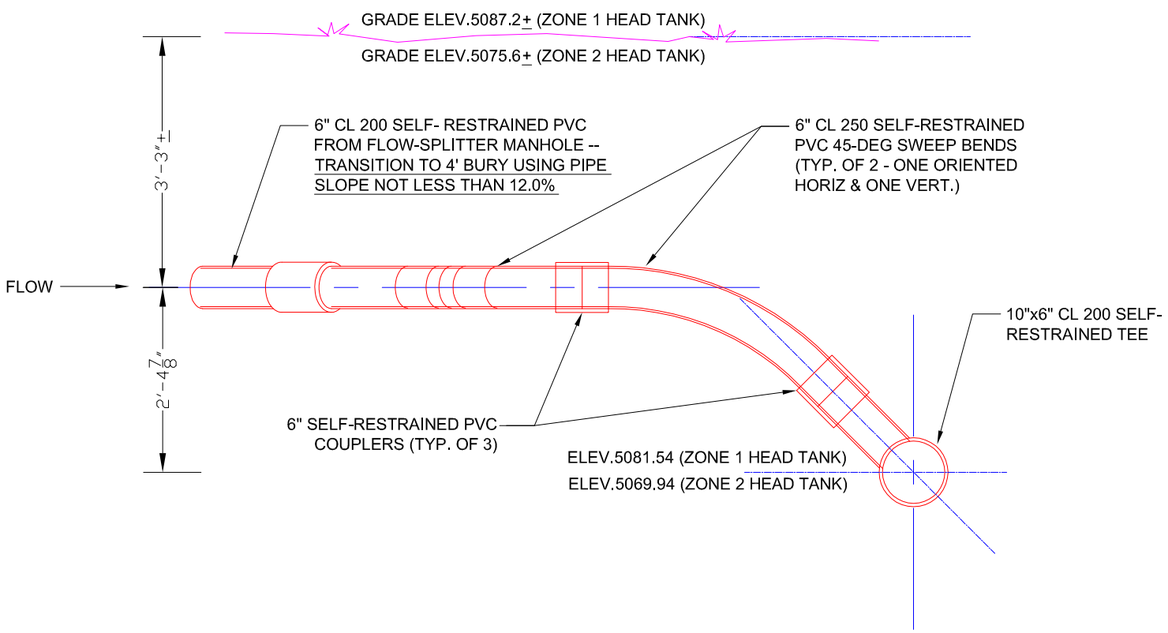

10" HEAD TANK(S) INLET CONNECTION SECTION (TYP.)

scale: ½" = 1'-0"

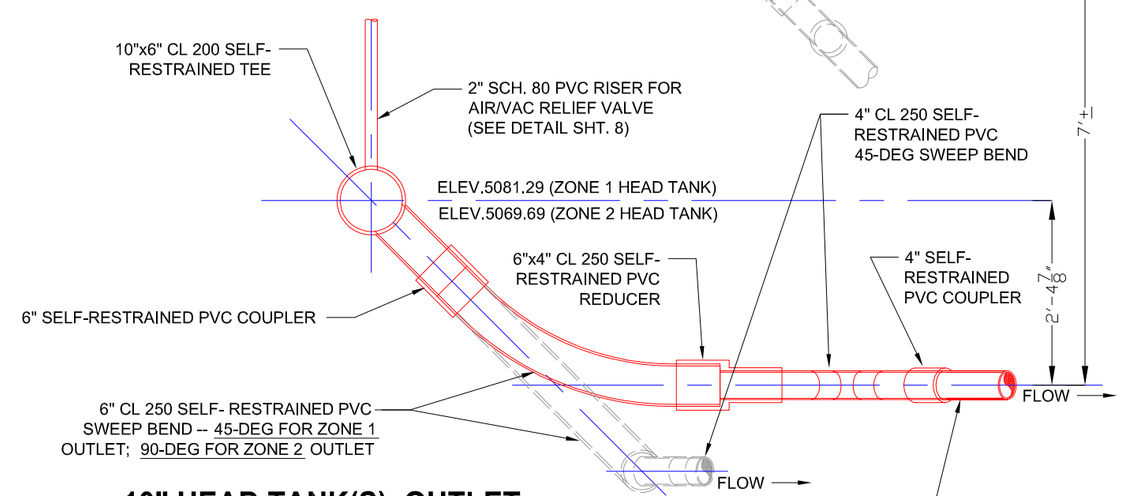

10" HEAD TANK(S) OUTLET CONNECTION SECTION (TYP.)

scale: ½" = 1'-0"

sheet 7 of 25

designed: Alden G. Beard. P.E.
date: August 24, 2017
revised: Feb. 21, 2019

Lewis & Clark Caverns State Park
Upper Visitor Center Septic Replacement
OUTFALL PIPING APPURTENANCES & DETAILS

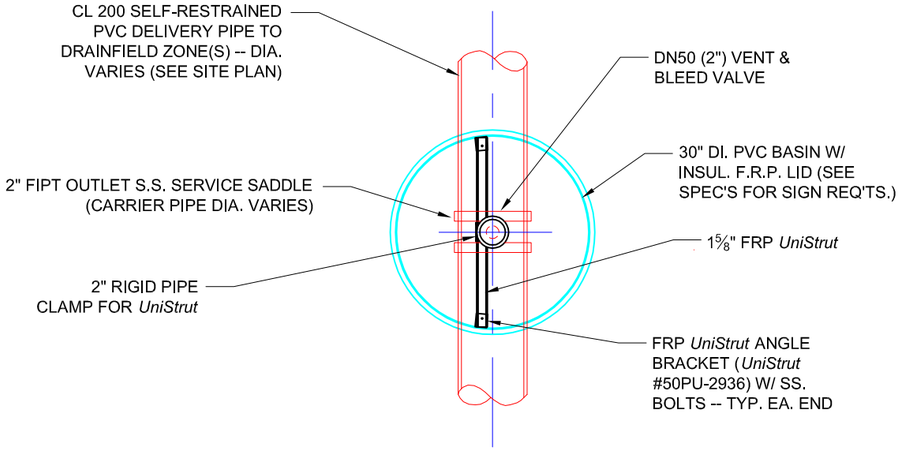

AIR/VAC VALVE VAULT PLAN (TYP.)

scale: ½" = 1'-0"

Air/Vac Valve & Vault Locations

piping run (or location)	approx. Sta.	air/vac valve type & size	vault req'd. (see Vault Detail)	approx. pipe bury depth (ft)	mainline pipe size (in)
Zone 1:					
	9+00	DN50 (2") Vent & Bleed	Yes	4± ft	6"
	10+78	DN50 (2") Vent & Bleed	Yes	4± ft	10"
	13+94	DN50 (2") Vent & Bleed	Yes	2½± ft	4"
Zone 2:					
	9+00	DN50 (2") Vent & Bleed	yes	4± ft	6"
	11+48.3	DN50 (2") Vent & Bleed	yes	4± ft	10"
	13+95	DN50 (2") Vent & Bleed	yes	4± ft	4"
Dosing Tank	n/a	DN80 (3") Ventilating	no	2±ft	
Dosing Pump Valve Vault	n/a	DN50 (2") Vent & Bleed (two req'd.)	(in Valve Vault)	n/a	

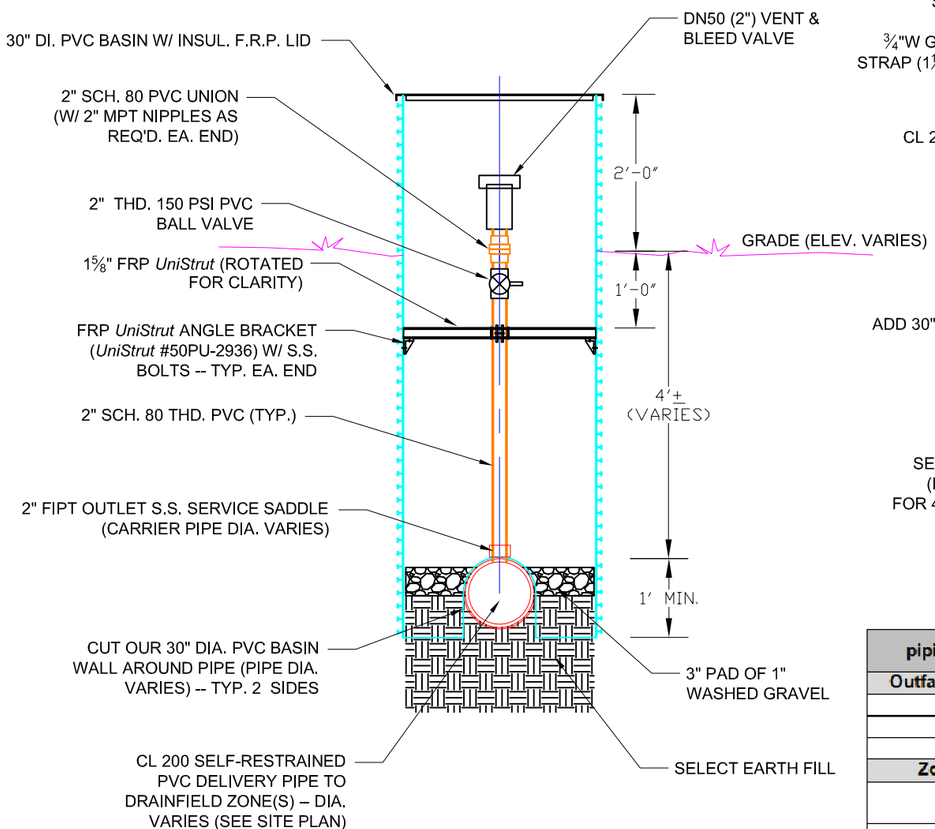

AIR/VAC VALVE VAULT SECTION (TYP.)

scale: ½" = 1'-0"

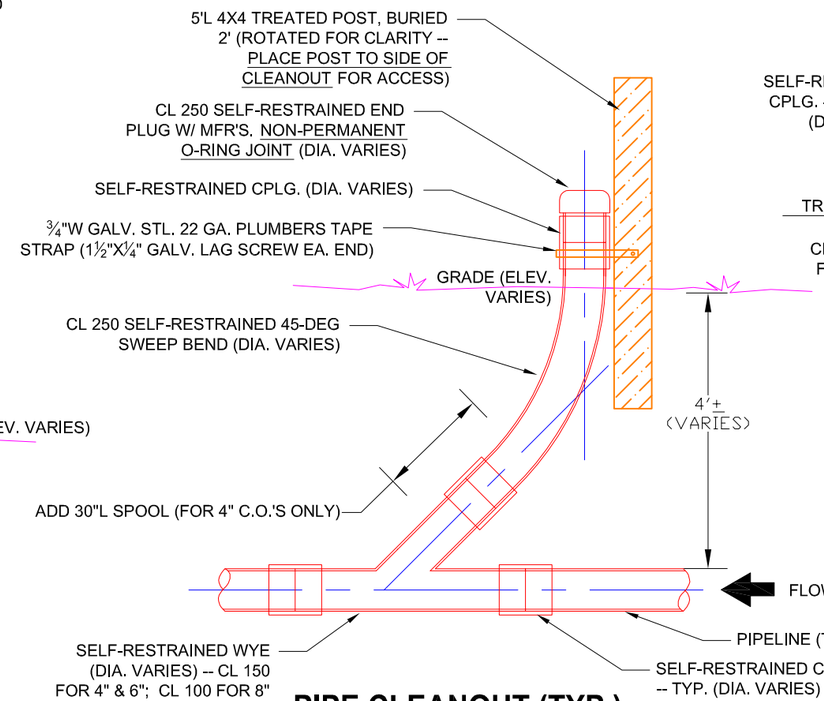

PIPE CLEANOUT (TYP.)

no scale

Pipe Cleanout Locations

piping run	approx. Sta.	pipe & cleanout size	notes
Outfall Sewer:			
	2+15	8"	Cleanout locations can be moved ±3' from stations shown to reduce need for cutting & re-grooving factory (straight) pipe lengths.
	4+30	8"	
	6+45	8"	
Zone 1:			
	10+86	4"	Cleanout can be coupled to 45-deg 4" horiz. sweep leaving 10" head tank piping.
	13+98	4"	Cleanout can be coupled to 45-deg sweep elbow entering drainfield Zone 1.
Zone 2:			
	11+58	4"	Cleanout can be coupled to 45-deg 4" horiz. sweep leaving 10" head tank piping.
	13+98.6	252 4"	Cleanout can be coupled to 45-deg sweep elbow entering drainfield Zone 2.

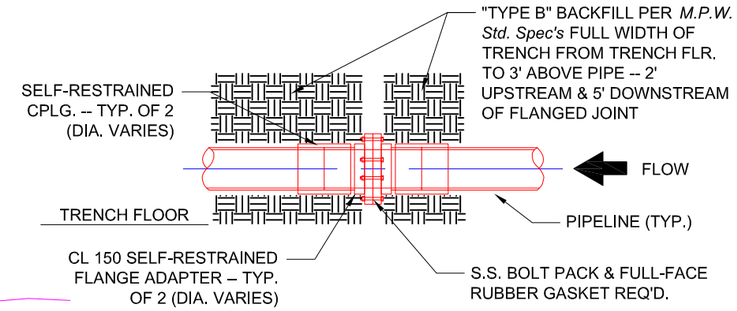

PIPE FLANGE SOIL RESTRAINT (TYP.)

no scale

Pipe Flange Soil Restraint Locations

piping run	approx. Sta. ♦	pipe size
Outfall Sewer:		
	0+50	8"
	2+00	8"
	4+00	8"
	6+20	8"
Zone 1:		
	8+80	6"
	11+00	4"
	13+00	4"
Zone 2:		
	8+80	6"
	10+50	6"
	12+50	4"

♦ flanged joint/soil restraint locations can be ±10' from Station shown to avoid cutting & re-grooving factory pipe lengths.

sheet 8 of 25

designed: Alden G. Beard. P.E.
date: August 28, 2017
revised: Feb, 21, 2019

Lewis & Clark Caverns State Park
Upper Visitor Center Septic Replacement
AIR/VAC VALVE & MISC. MECHANICAL DETAILS

NOTES:

1. CONTRACTOR IS RESPONSIBLE FOR DETERMINING SAFE EXCAVATION METHODS FOR NEW TANK INSTALLATION, INCLUDING ANY SHEETING OR PREVENTATIVE STABILIZATION DETERMINED TO BE NECESSARY TO PROTECT EXISTING SLOPES, PARKING LOT EARTH FILL, & EXISTING STRUCTURES. EXCAVATION PLAN SHALL BE SUBMITTED PER REQ'TS. FOR SUBMITTAL REVIEW.
2. CONTRACTOR IS RESPONSIBLE FOR MEANS & METHODS FOR TRANSPORTING & PLACING NEW STRUCTURES & TANKS, INCLUDING ANY CRANE RIGGING IF/AS NECESSARY, SUBJECT TO REQ'TS. FOR SUBMITTAL REVIEW.
3. SEE SHEET 15 FOR ELECTRICAL SITE PLAN & IMPROVEMENTS.

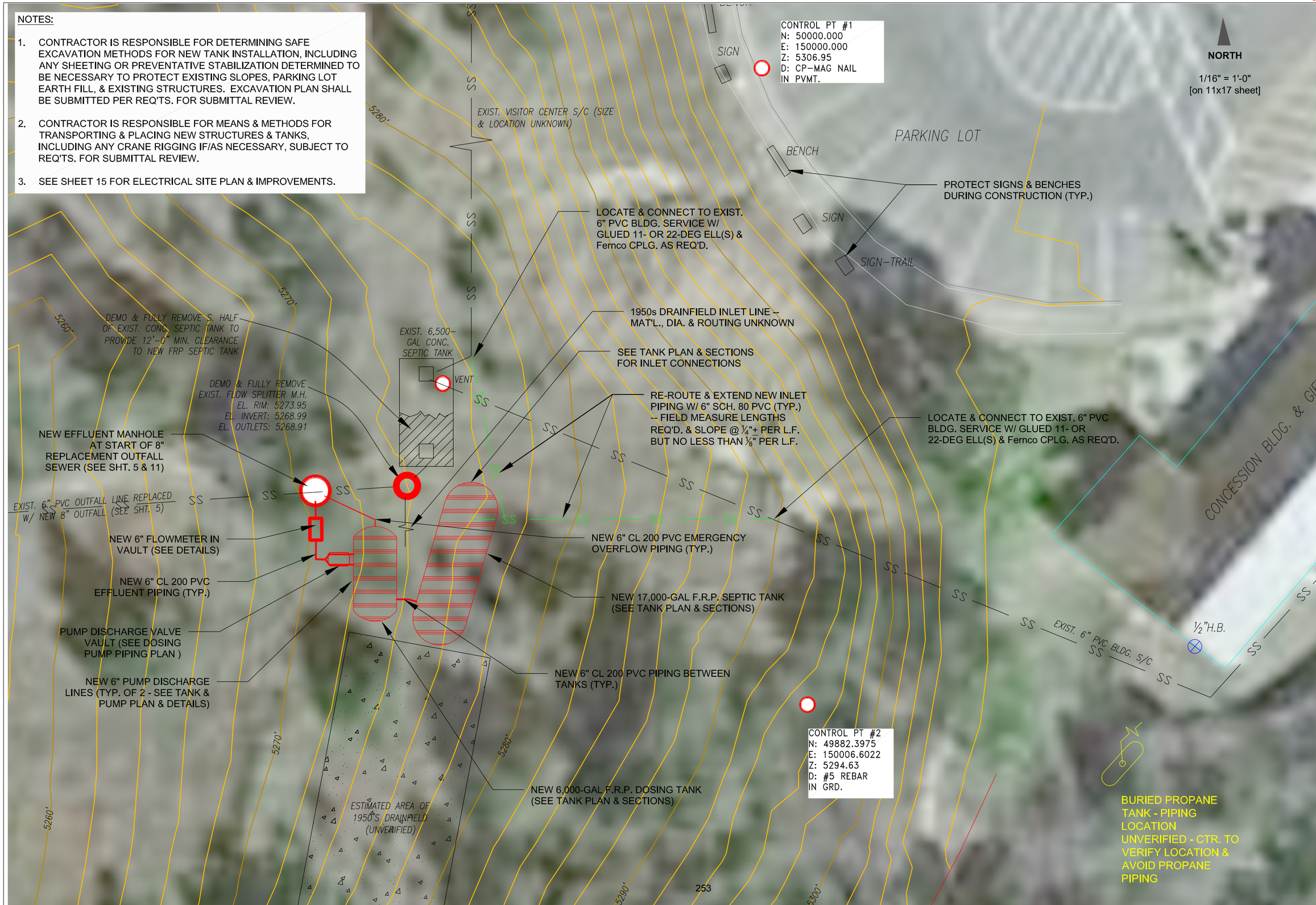

sheet 9 of 25

designed: Alden G. Beard. P.E.
date: July 31, 2017
revised: Feb. 21, 2019

Lewis & Clark Caverns State Park
Upper Visitor Center Septic Replacement
NEW SEPTIC & DOSING TANKS SITE PLAN

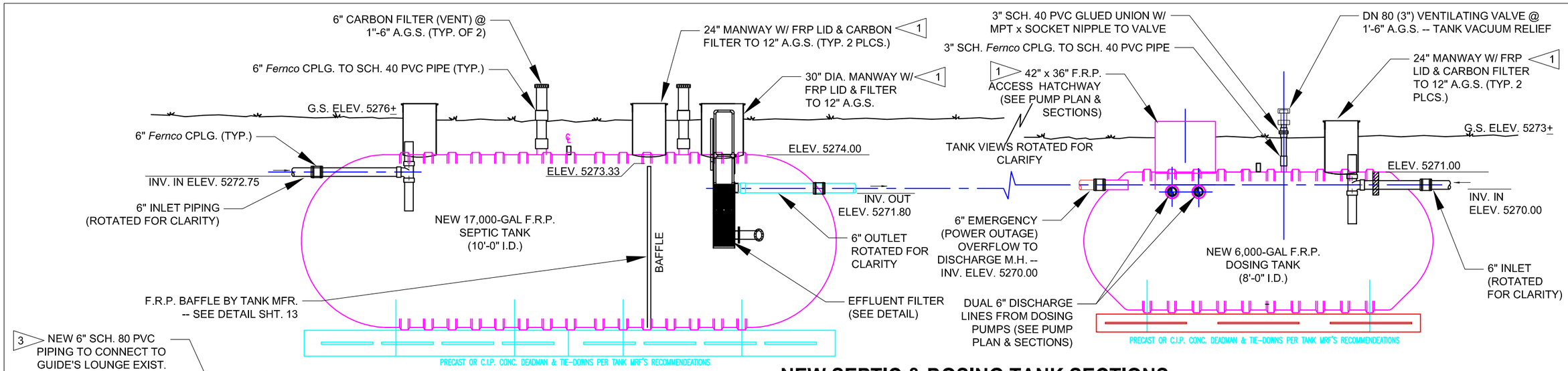

NEW SEPTIC & DOSING TANK SECTIONS

scale: 1" = 60'-0" [on 11x17 sheet]

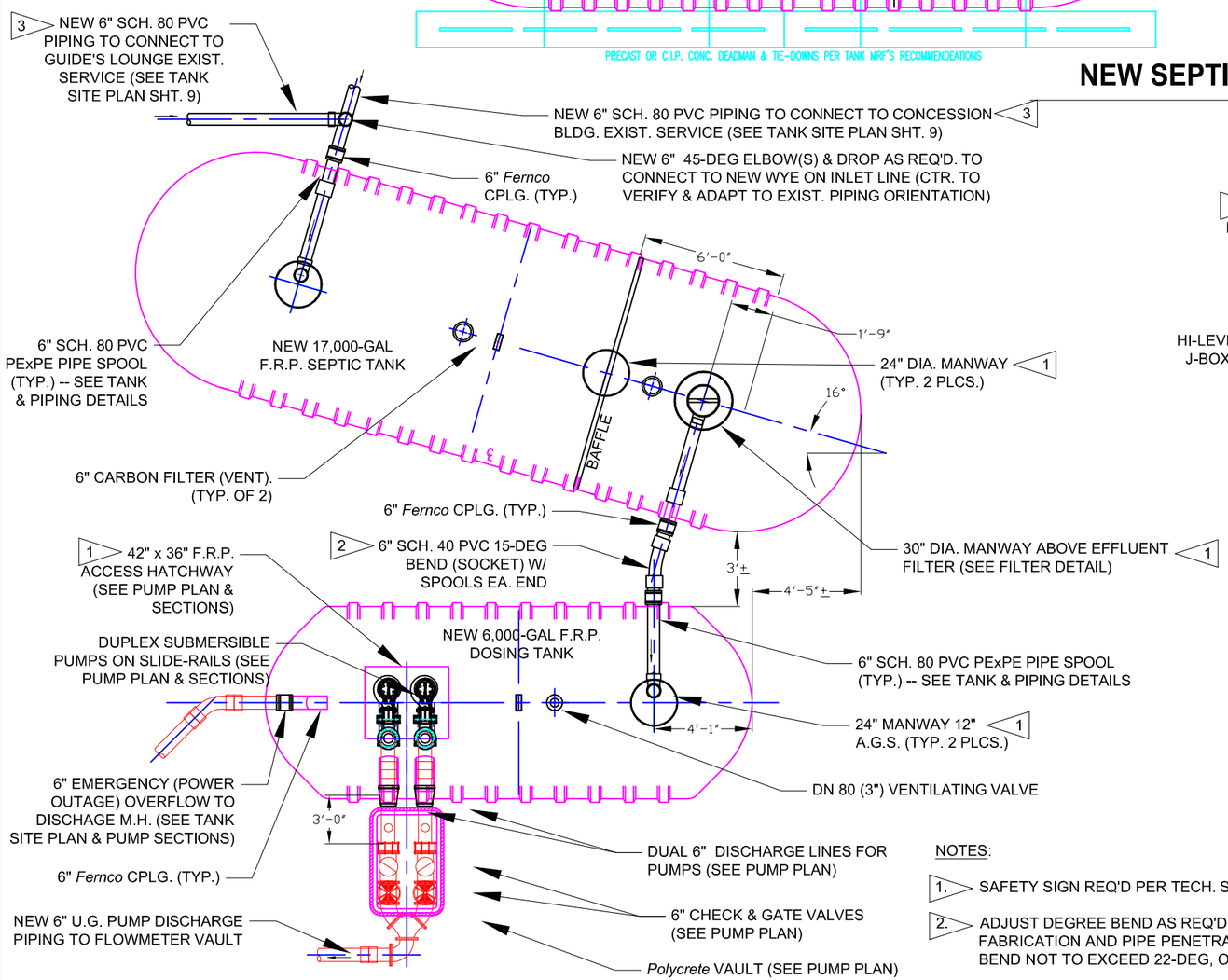

NEW SEPTIC & DOSING TANK PLAN

scale: 1" = 60'-0" [on 11x17 sheet]

NOTES:

1. SAFETY SIGN REQ'D PER TECH. SPEC. 10400.
2. ADJUST DEGREE BEND AS REQ'D. TO FIT FINAL TANK(S) FABRICATION AND PIPE PENETRATION LOCATIONS -- BEND NOT TO EXCEED 22-DEG, OR USE MULTIPLE BENDS.
3. SLOPE PIPE AT ¼"+ PER L.F. BUT NO LESS THAN ⅛" PER L.F. FROM POINT(S) OF CONNECTION TO EXIST. BLDG. SERVICE LINES

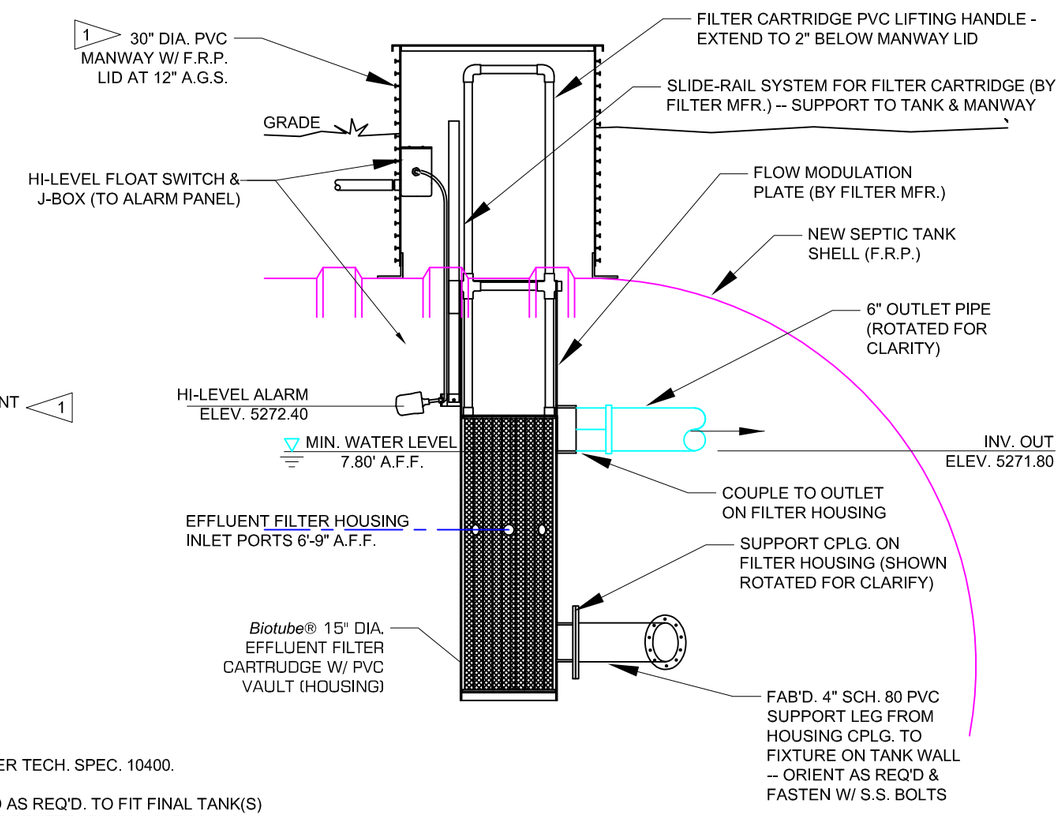

SEPTIC TANK EFFLUENT FILTER DETAIL

scale: ½" = 1'-0" [on 11x17 sheet]

sheet 10 of 25

designed: Alden G. Beard. P.E.
date: July 31, 2017
revised: Feb. 21, 2019

Lewis & Clark Caverns State Park
Upper Visitor Center Septic Replacement
NEW SEPTIC & DOSING TANK PLAN & SECTIONS

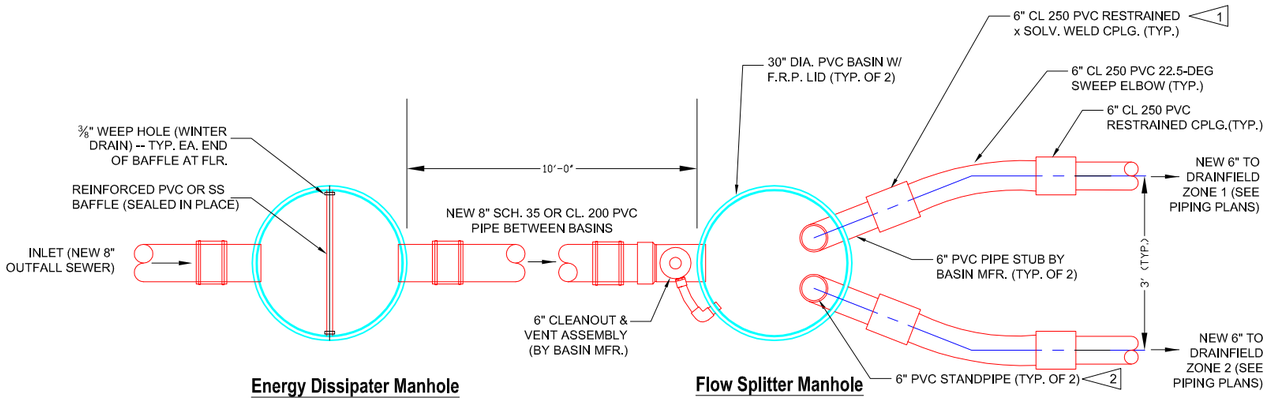

PLAN VIEW

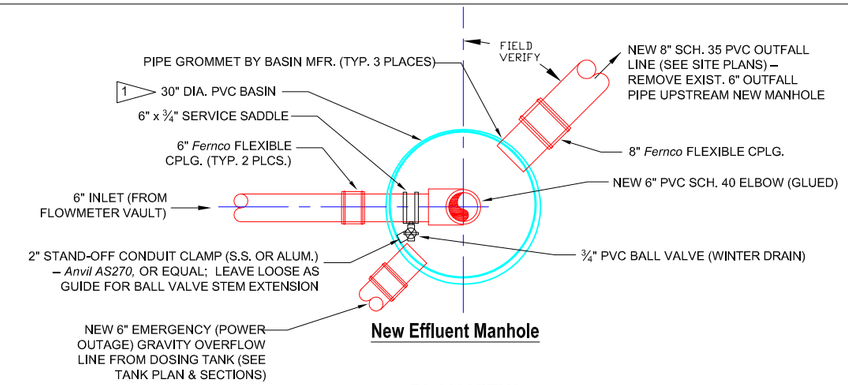

PLAN VIEW

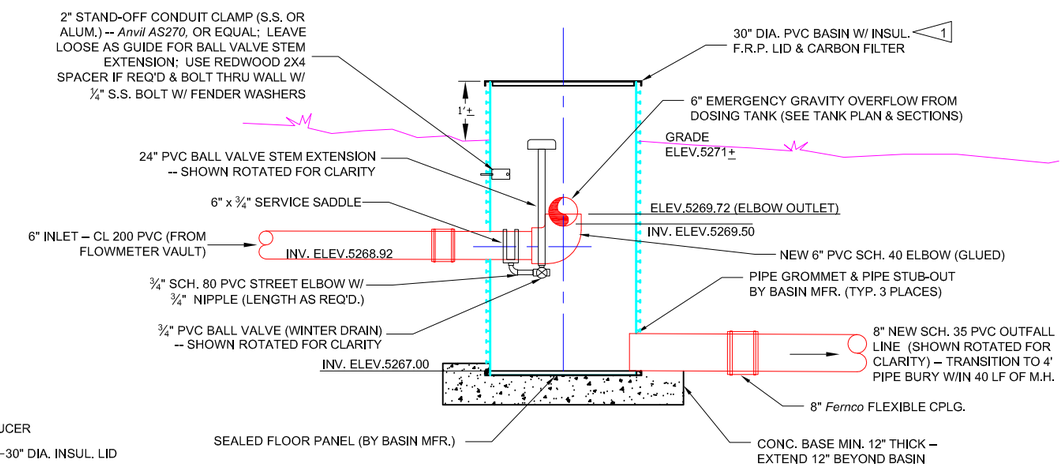

SECTION

NEW EFFLUENT MANHOLE

scale: 3/8" = 1'-0"

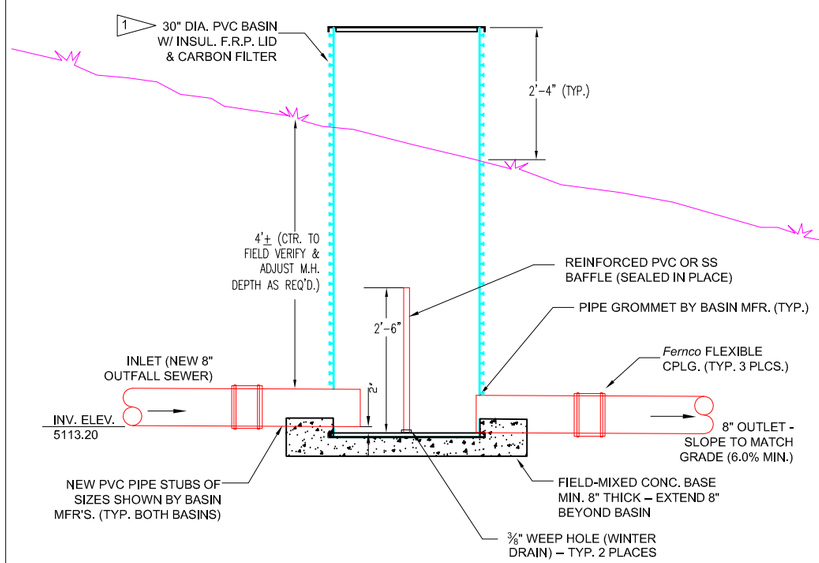

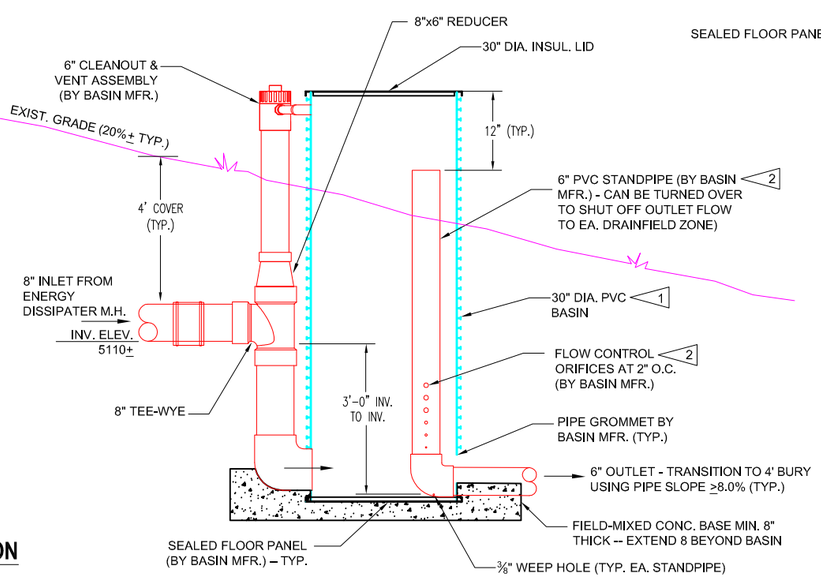

SECTION

NEW ENERGY DISSIPATER & FLOW SPLITTER MANHOLES

scale: 3/8" = 1'-0"

NOTES:

1. SEE "SIGNS" SPEC. FOR SIGN REQ'TS.INSIDE ALL MANHOLES & BASINS.
2. STANDPIPE ORIFICES SIZED BY BASIN MFR. FOR 300 GPM PER STANDPIPE.

designed: Alden G. Beard. P.E.
date: July 31, 2017
revised: Feb. 21, 2019

Lewis & Clark Caverns State Park
Upper Visitor Center Septic Replacement
NEW MANHOLE & FLOW SPLITTER DETAILS

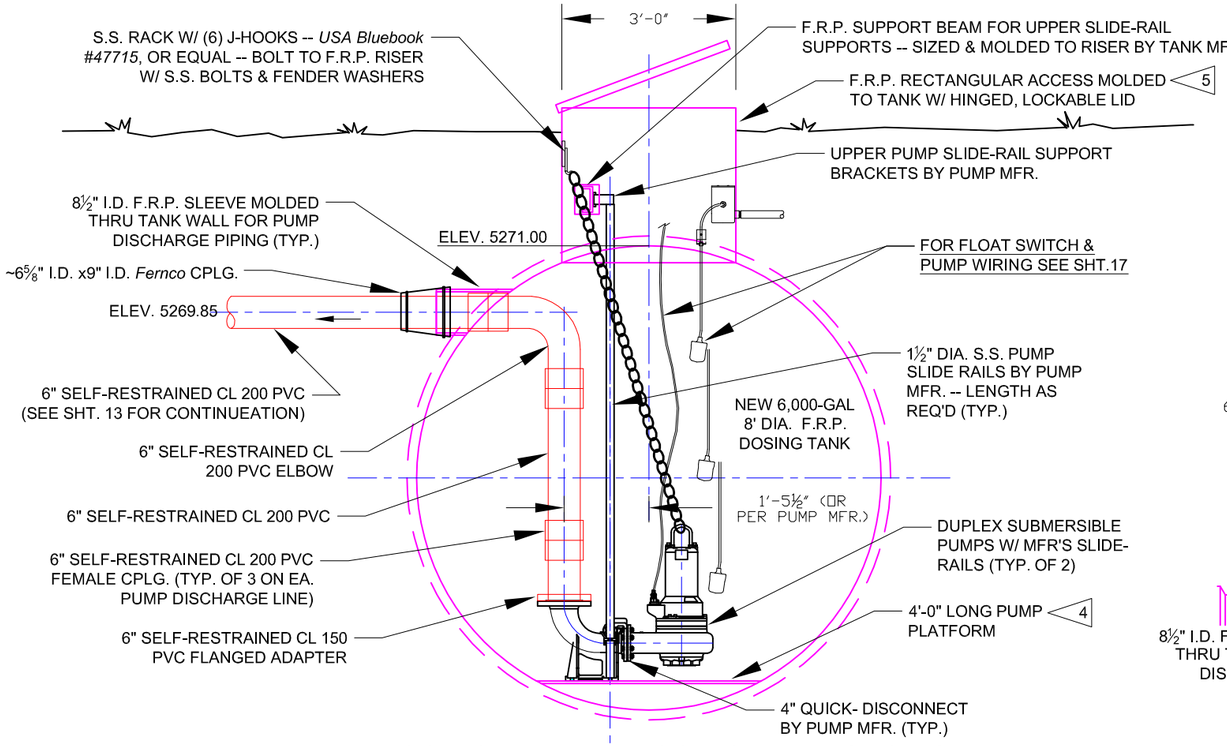

DOSING PUMP IN DOSING TANK SECTION

scale: ⅜" = 1'-0" [on 11x17 sheet]

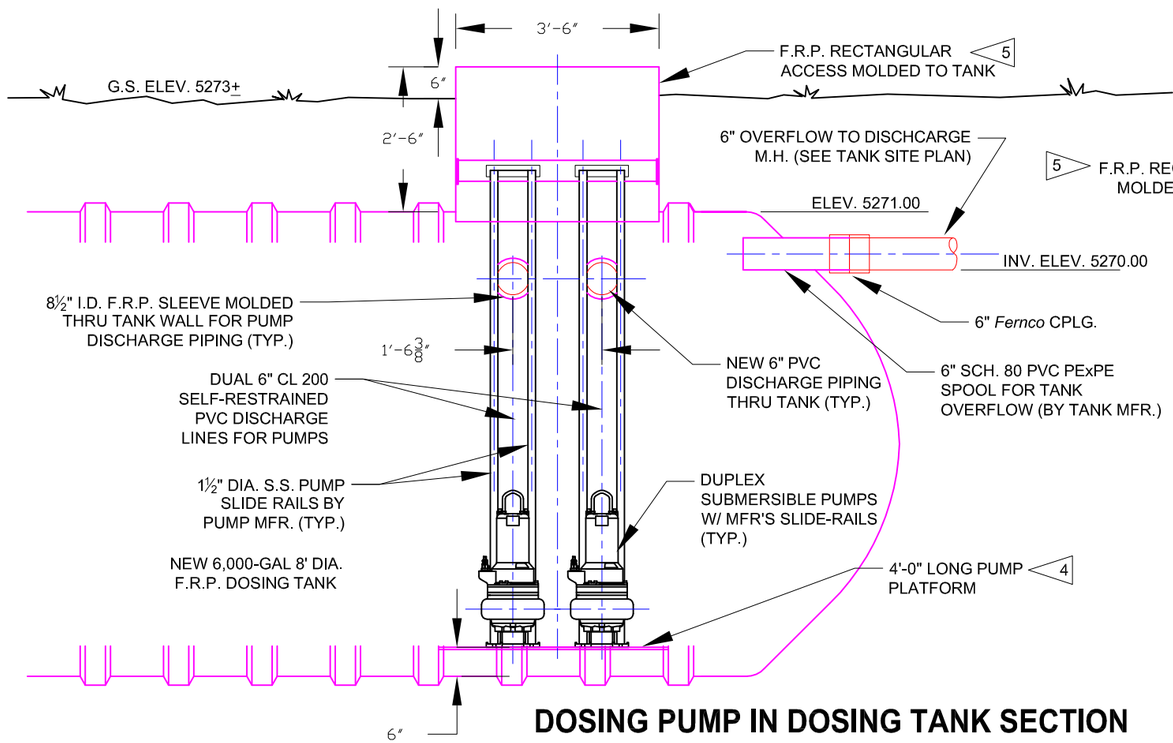

DOSING PUMP IN DOSING TANK SECTION

scale: ⅜" = 1'-0" [on 11x17 sheet]

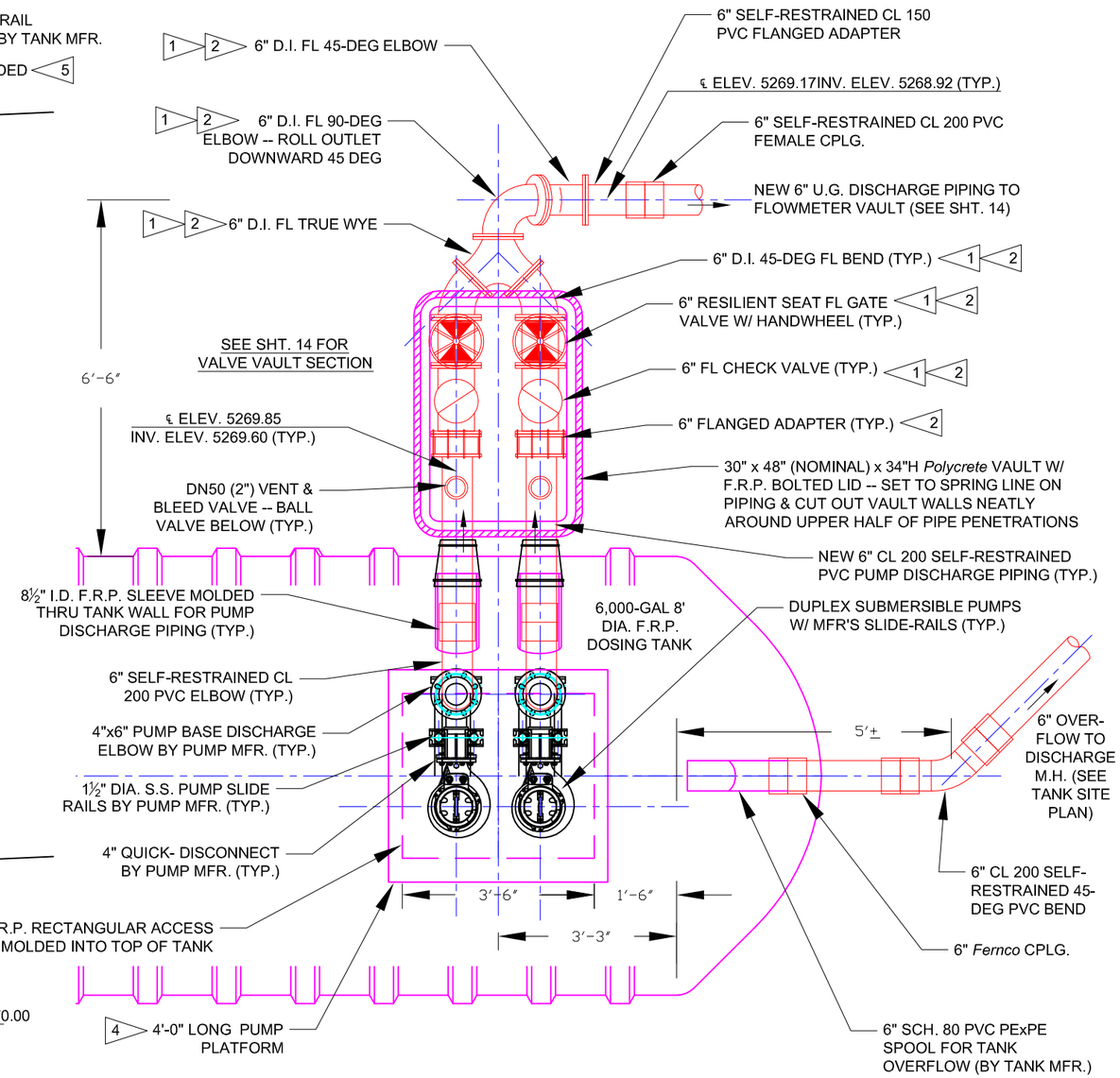

DOSING PUMP & PIPING PLAN

scale: ⅜" = 1'-0" [on 11x17 sheet]

NOTES:

1. INSTALL ALL D.I. BENDS & GATE VALVES (INCL. WYE & CHECK VALVES) W/ CONC. THRUST RESTRAINTS PER *M.P.W. Std. Specifications* REQT'S. FOR BENDS & VALVES.
2. BITUMASTIC COAT ALL STEEL & D.I. FITTINGS & VALVE BODIES WHERE IN CONTACT WITH SOIL OR GRAVEL -- INCL. UNDERSIDE OF FITTINGS & VALVES WHERE EXPOSED IN VAULT.
3. SEE SHT. 17 FOR DOSING PUMP ELECTRICAL WIRING.
4. PUMP SUPPORT PLATFORM IN TANK TO BE S.S. PLATE FULLY ENCASED IN FRP & MOLDED TO TANK WALLS, W/ S.S. ANCHOR BOLTS SIZED & PATTERNED TO MATCH PUMP BASES -- PLATFORM FABRICATION & INSTALLATION BY TANK MFR. & STRUCTURALLY SIZED BY TANK MFR. TO MEET PUMP MFR'S. REQ'TS, SUBJECT TO REQ'TS. FOR SUBMITTAL REVIEW.
5. SEE 'SIGNS' TECH. SPEC. FOR SIGN REQ'TS. INSIDE ACCESS HATCH.

designed: Alden G. Beard. P.E.
date: August 30, 2017
revised: Feb. 21, 2019

Lewis & Clark Caverns State Park
Upper Visitor Center Septic Replacement
DOSING PUMP PLAN & SECTIONS

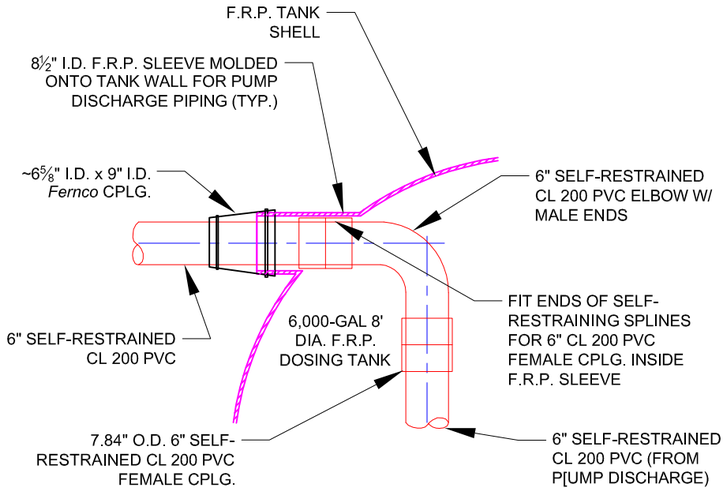

DOSING TANK PUMP DISCHARGE PENETRATION

scale: ½" = 1'-0" [on 11x17 sheet]

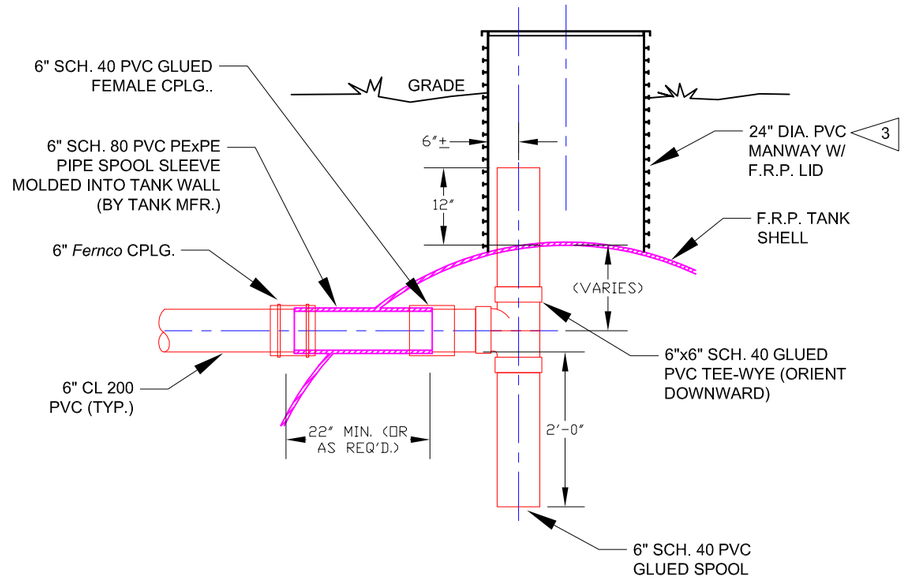

SEPTIC & DOSING TANK INLET PIPE PENETRATIONS (TYP.)

scale: ½" = 1'-0" [on 11x17 sheet]

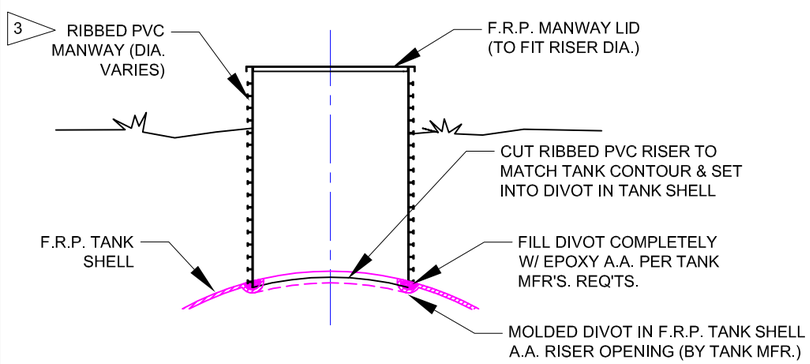

TANK PVC RISER CONNECTION DETAIL (TYP.)

scale: ½" = 1'-0" [on 11x17 sheet]

NOTES:

1. ALL PENETRATIONS, CONNECTIONS & PIPE FITTINGS ATTACHED THROUGH SEPTIC & DOSING TANK WALLS TO BE INSTALLED (MOLDED IN) BY F.R.P. TANK(S) MFR. NO FIELD CUTTING OR FIELD-INSTALLED PENETRATIONS ALLOWED.

2. ALL PIPE PENETRATIONS SHALL BE SCH. 80 PVC PExPE SPOOL PIECES, MOLDED INTO TANK WALLS, UNLESS OTHERWISE SHOWN. SPOOL LENGTHS TO BE ADEQUATE FOR CONNECTORS SHOWN FOR ADJACENT PIPING.

3. SEE 'SIGNS' TECH. SPEC. FOR SIGN REQ'TS. INSIDE ALL RISERS.

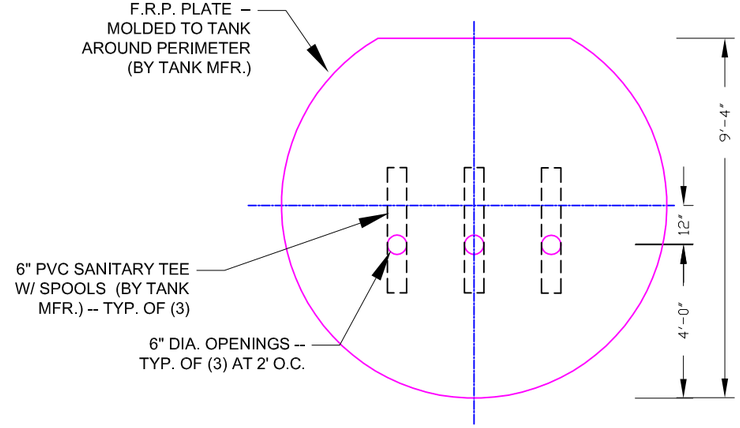

SEPTIC TANK BAFFLE ELEVATION

scale: ¼" = 1'-0" [on 11x17 sheet]

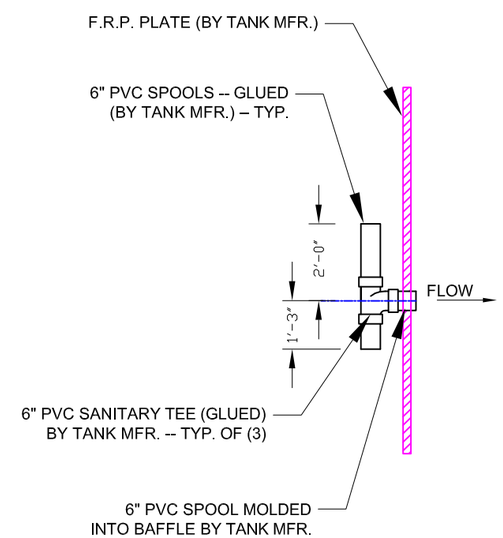

TANK BAFFLE SECTION

scale: ¼" = 1'-0" [on 11x17 sheet]

designed: Alden G. Beard. P.E.
date: August 31, 2017
revised: Feb. 21, 2019

Lewis & Clark Caverns State Park
Upper Visitor Center Septic Replacement
TANK & PIPING DETAILS

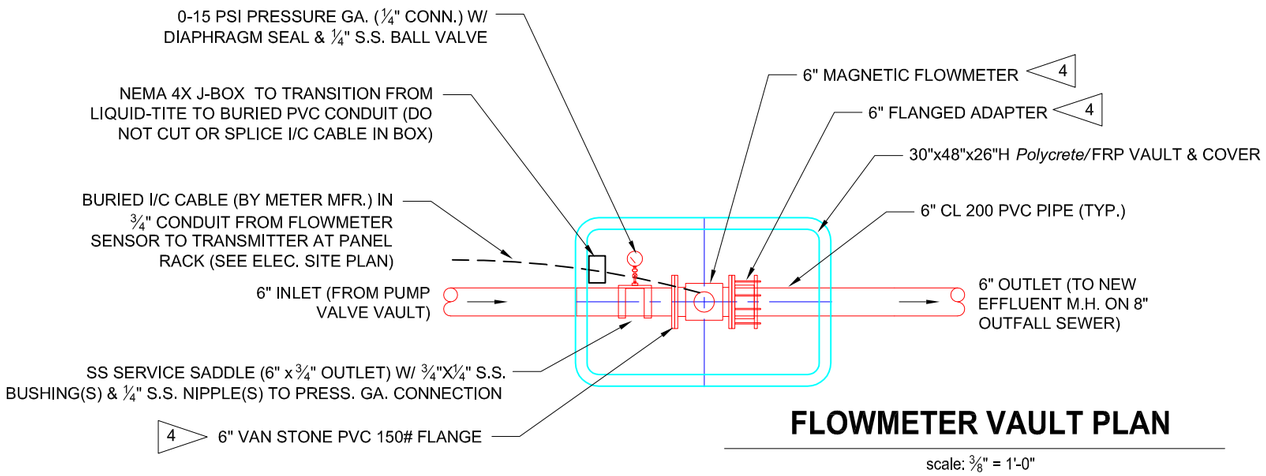

FLOWMETER VAULT PLAN

scale: ⅜" = 1'-0"

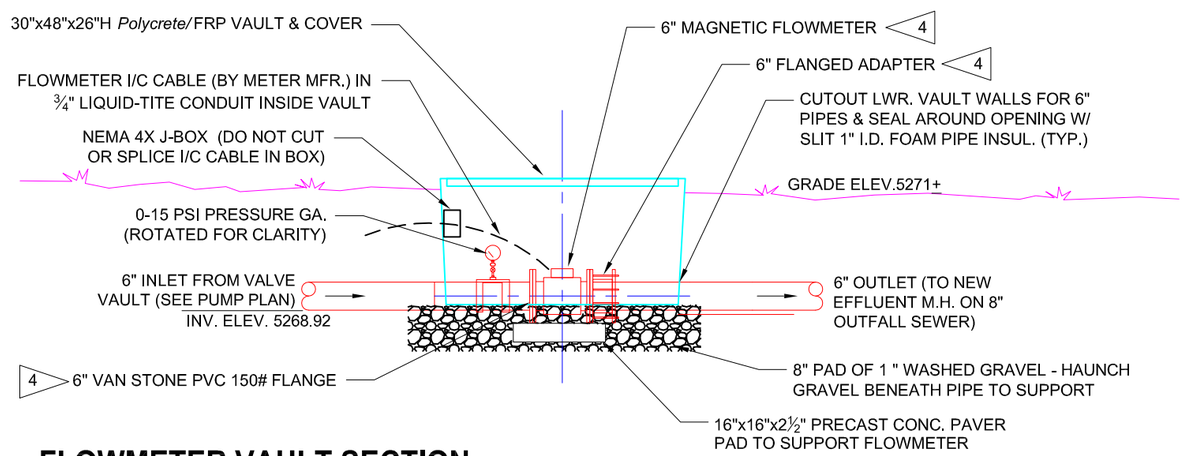

FLOWMETER VAULT SECTION

scale: ⅜" = 1'-0"

NOTES:

1. INSTALL ALL D.I. BENDS & GATE VALVES (INCL. WYE & CHECK VALVES) W/ CONC. THRUST RESTRAINGS PER *M.P.W. Std. Specifications* REQT'S. FOR BENDS & VALVES.
2. BITUMASTIC COAT ALL STEEL & D.I. FITTINGS & VALVE BODIES WHERE IN CONTACT WITH SOIL OR GRAVEL -- INCL. UNDERSIDE OF FITTINGS & VALVES WHERE EXPOSED IN VAULTS.
3. ASSEMBLE W/ SCH. 80 PVC SHORT MPT NIPPLES (LENGTH AS REQ'D.)
4. INSTALL GROUND RINGS EA. SIDE OF METER PER METER MFR'S. REQ'TS.

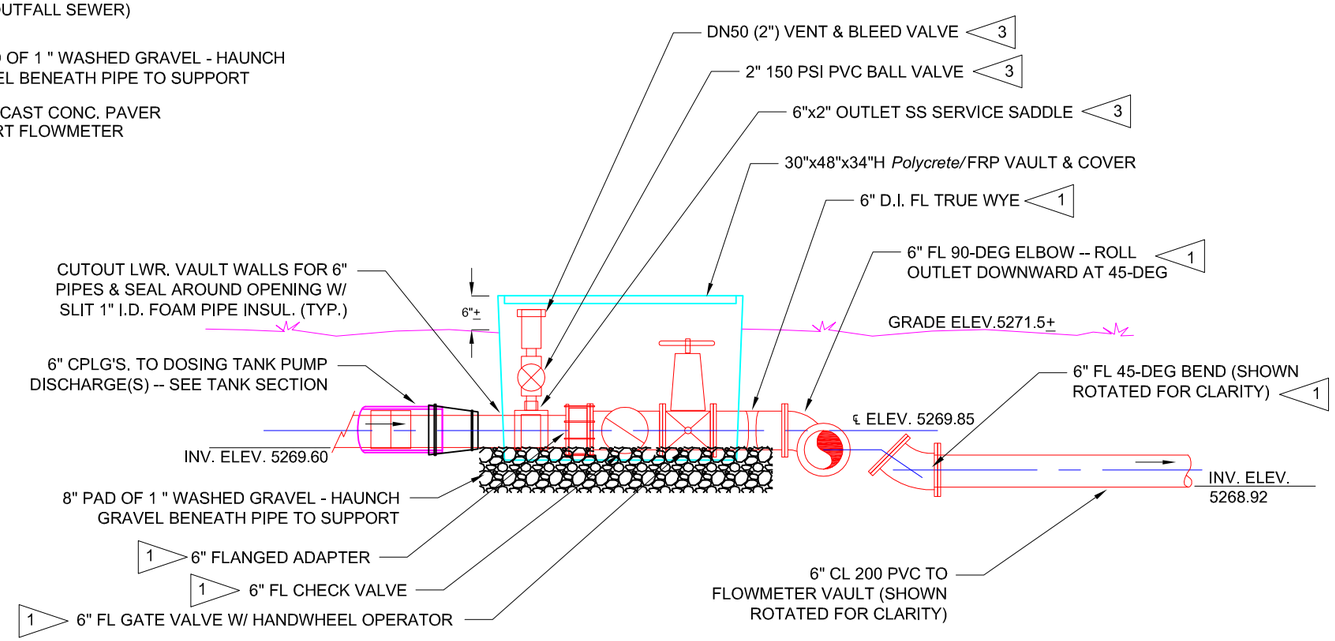

PUMP VALVE VAULT SECTION

scale: ⅜" = 1'-0"

designed: Alden G. Beard. P.E.
date: July 31, 2017
revised: Feb. 21, 2019

Lewis & Clark Caverns State Park
Upper Visitor Center Septic Replacement
FLOWMETER & VALVE VAULT PLAN & SECTIONS

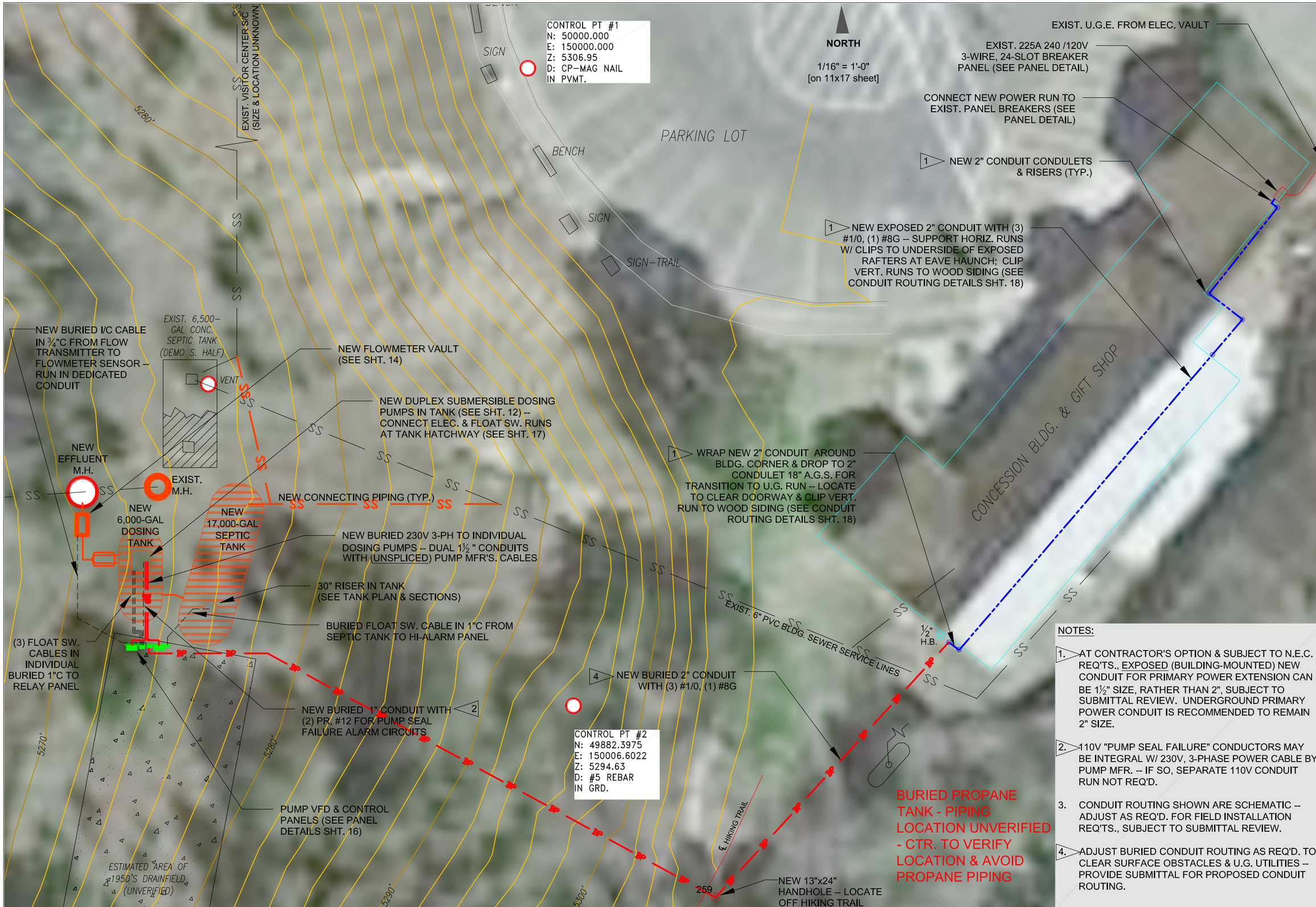

NOTES:

1. AT CONTRACTOR'S OPTION & SUBJECT TO N.E.C. REQ'TS., EXPOSED (BUILDING-MOUNTED) NEW CONDUIT FOR PRIMARY POWER EXTENSION CAN BE 1½" SIZE, RATHER THAN 2", SUBJECT TO SUBMITTAL REVIEW. UNDERGROUND PRIMARY POWER CONDUIT IS RECOMMENDED TO REMAIN 2" SIZE.
2. 110V "PUMP SEAL FAILURE" CONDUCTORS MAY BE INTEGRAL W/ 230V, 3-PHASE POWER CABLE BY PUMP MFR. -- IF SO, SEPARATE 110V CONDUIT RUN NOT REQ'D.
3. CONDUIT ROUTING SHOWN ARE SCHEMATIC -- ADJUST AS REQ'D. FOR FIELD INSTALLATION REQ'TS., SUBJECT TO SUBMITTAL REVIEW.
4. ADJUST BURIED CONDUIT ROUTING AS REQ'D. TO CLEAR SURFACE OBSTACLES & U.G. UTILITIES -- PROVIDE SUBMITTAL FOR PROPOSED CONDUIT ROUTING.

designed: Alden G. Beard. P.E.
date: July 31, 2017
revised: Feb. 21, 2019

Lewis & Clark Caverns State Park
Upper Visitor Center Septic Replacement
ELECTRICAL SITE PLAN

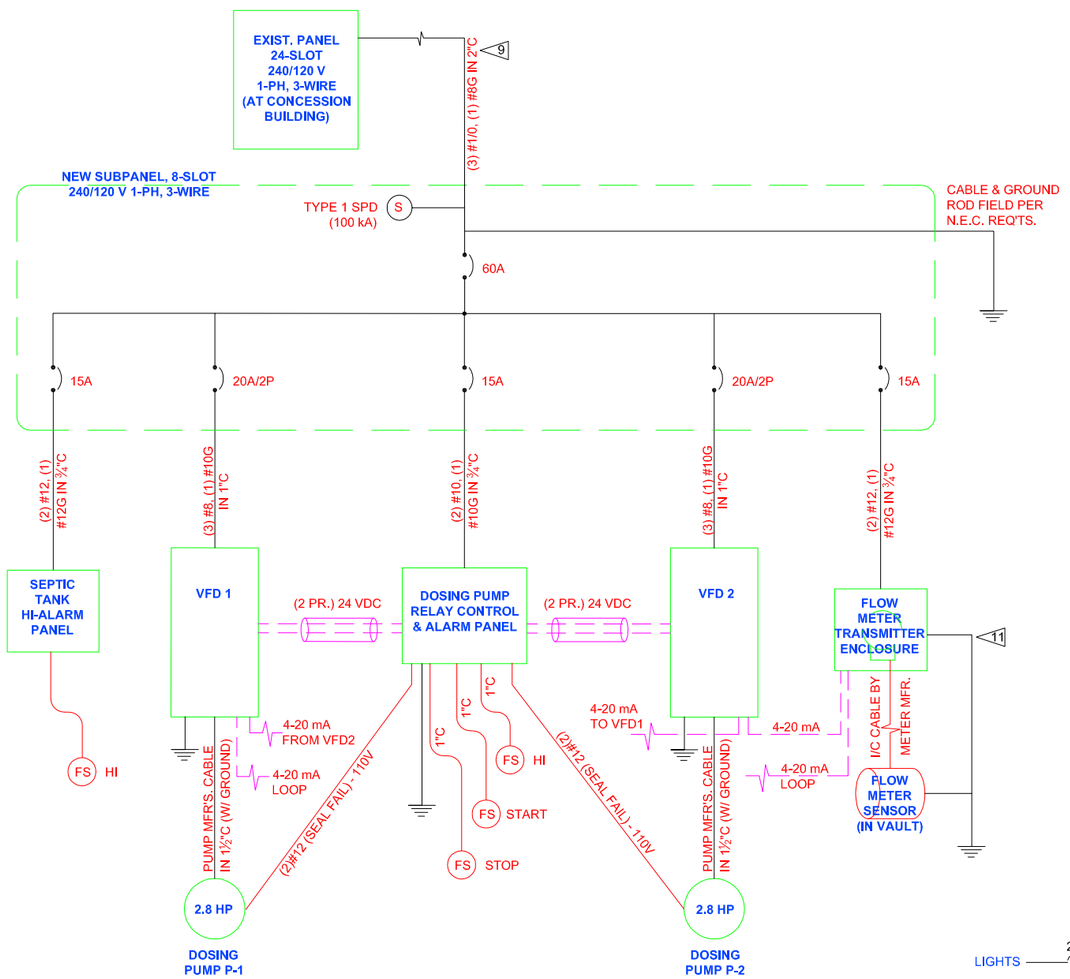

New 240 / 120V Power Distribution One-Line Diagram 10

no scale

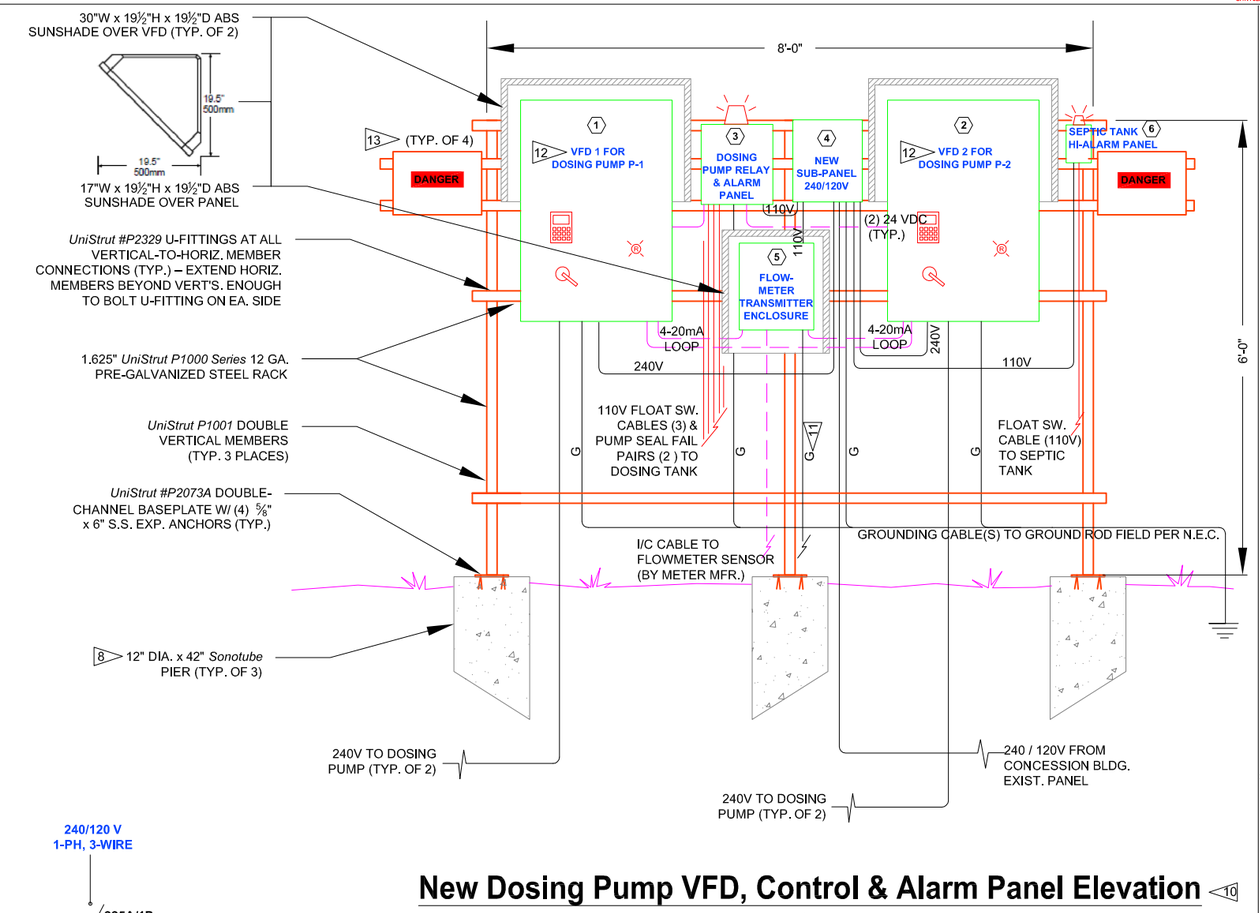

New Dosing Pump VFD, Control & Alarm Panel Elevation 10

scale: ½" = 1'-0"

PANEL NAMEPLATES – PROVIDE 8"x2" ETCHED 0.020" ALUMINUM ADHESIVE NAMEPLATES WITH ¾" *Modern* SILVER ENGRAVED LETTERING ON BLACK BACKGROUND FOR INDIVIDUAL PANELS TO READ AS FOLLOWS (SUBJECT TO SUBMITTAL REVIEW):

MARK

1. VFD 1 (DOSING PUMP P-1)
2. VFD 2 (DOSING PUMP P-2)
3. DOSING PUMP RELAY PANEL
4. 240/120V BREAKER PANEL
5. EFFLUENT FLOWMETER
6. SEPTIC TANK HI-ALARM *(4"X3" label size)*

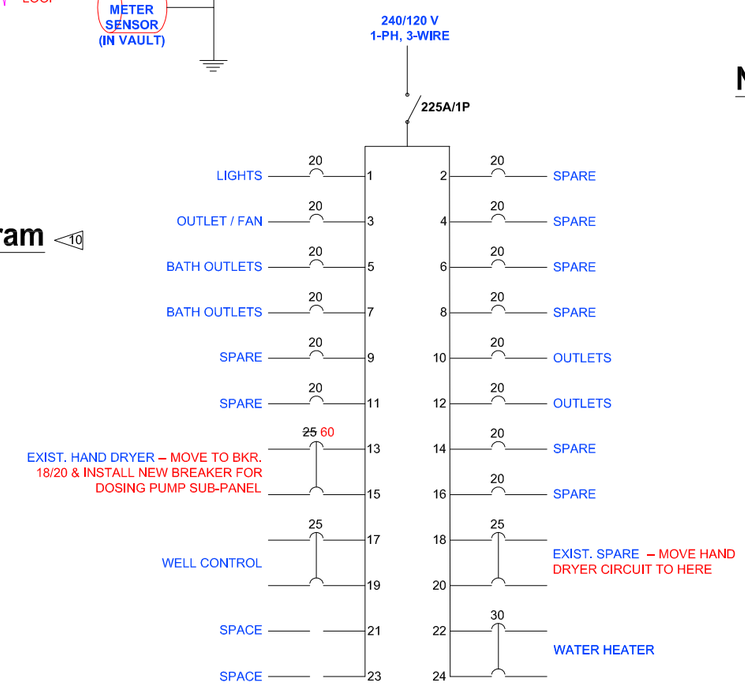

Exist. Concession Bldg. Lighting Panel Schematic

no scale

NOTES:

1. MOUNT PANELS TO *UniStrut* RACK PER PANEL MFR'S. RECOMMENDATIONS. USE ONLY S.S. FASTENERS.
2. CONFIGURE *UniStrut* HORIZONTAL MEMBERS AS REQ'D. TO ENGAGE ALL PANEL MOUNTING POINTS & TABS – PROVIDE ADDITIONAL HORIZONTAL & VERTICAL MEMBERS OTHER THAN THOSE SHOWN IF/AS REQ'D.
3. USE ONLY *UniStrut* GALVANIZED CONDUIT CLAMPS SIZED FOR CONDUITS INVOLVED, INCLUDING *Series P3400* STAND-OFF CLAMPS WHERE REQ'D. FOR CROSSING CLEARANCES OR OFFSETS.
4. SPACE PANELS AS REQ'D. FOR CLEARANCES & CONDUIT ROUTINGS – SPATIAL ARRANGEMENT SHOWN IS SCHEMATIC, SUBJECT TO CONTRACTOR CONFIRMATION & ORIENTATION OF PANEL CONNECTIONS. ADD J-BOXES IF/AS REQ'D. ON CONDUITS RUNS.
5. FLEXIBLE LIQUID-TIGHT CONDUIT MAY BE SUBSTITUTED FOR RIGID GALV. STEEL (RGS) OR INTERMEDIATE METAL CONDUIT (IMC) FOR RUNS BETWEEN PANELS ON RACK, SUBJECT TO REQ'TS. FOR SUBMITTAL REVIEW.
6. POWER (AC & DC) CONDUCTORS CANNOT BE ROUTED IN SAME CONDUIT AS I/C CABLES.
7. ALL WIRING & GROUNDING PER N.E.C. & EQUIPMENT MFR'S. REQ'TS.
8. MAINTAIN 4'-0" MINIMUM CLEARANCE FROM *Sonotubes* TO NEW SEPTIC & DOSING FRP TANK(S) FOOTPRINTS.
9. AT CONTRACTOR'S OPTION & SUBJECT TO N.E.C. REQ'TS., EXPOSED (BUILDING-MOUNTED) NEW CONDUIT FOR PRIMARY POWER EXTENSION CAN BE 1½" SIZE, RATHER THAN 2"', SUBJECT TO SUBMITTAL REVIEW. UNDERGROUND PRIMARY POWER CONDUIT IS RECOMMENDED TO REMAIN 2" SIZE.
10. DOSING PUMPS, CONTROLS, TANK ALARMS & RELATED WIRING MUST ALL MEET N.E.C. CLASS 1, DIVISION 2 REQ'TS. FOR HAZARDOUS LOCATIONS PER MDEQ *Circular DEQ4-4.2.3.1.*
11. GROUND FLOWMETER TRANSMITTER (AND SENSOR) PER METER MFR'S. REQ'TS.
12. GROUND VFD'S PER MFR'S. & N.E.C. REQ'TS.
13. SAFETY SIGNS PER TECH. SPEC. 10400.
14. POWER & CONTROL PANEL RACK WILL BE ENCLOSED WITH WOOD FENCE BY OWNER AFTER CONSTRUCTION.

designed: Alden G. Beard. P.E.
date: July 31, 2017
revised: Feb. 21, 2019

Lewis & Clark Caverns State Park
Upper Visitor Center Septic Replacement
ELECTRICAL PANEL SCHEMATICS & DETAILS

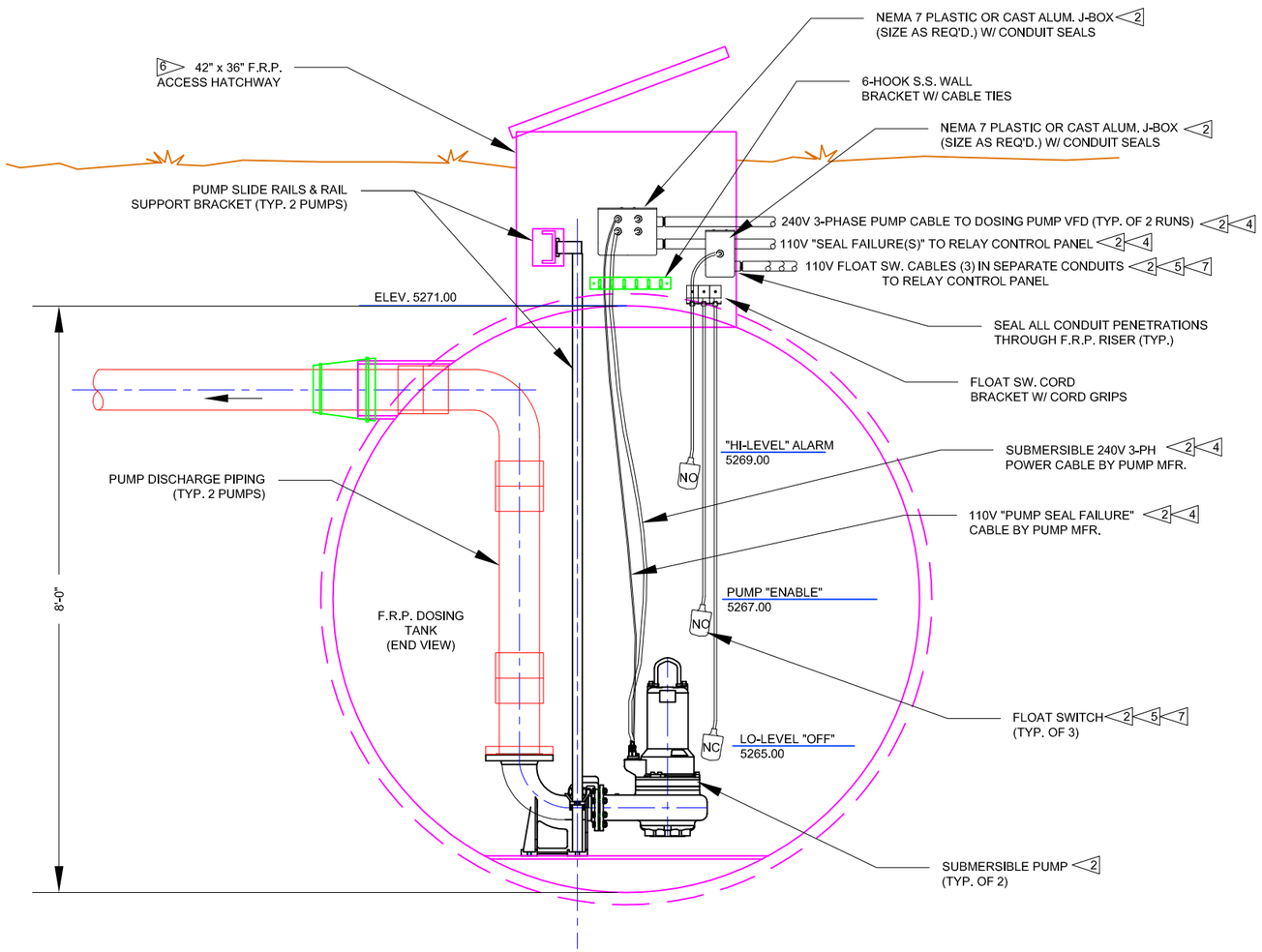

New Dosing Pump Wiring Detail

scale: ½" = 1'-0"

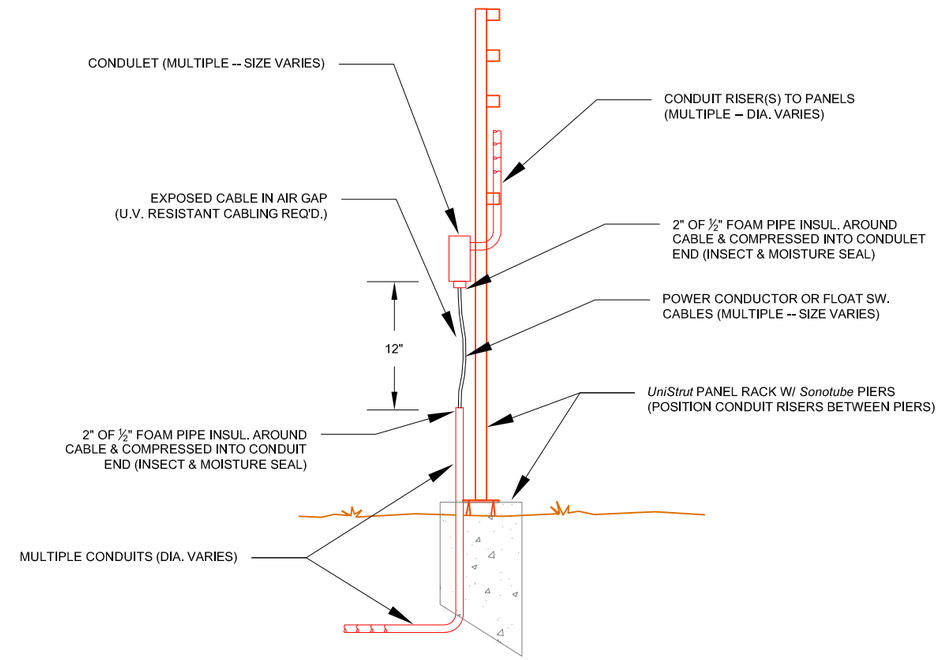

Conduit Air Gap Detail (Typ.) 2 8

no scale

NOTES:

1. ARRANGEMENT SHOWN TYP. FOR (2) SUBMERSIBLE PUMPS; CABLING FOR BOTH PUMPS TO FIT INSIDE SINGLE ACCESS HATCHWAY.

2. DOSING PUMPS, CONTROLS, FLOAT SWITCHES, TANK ALARMS & RELATED WIRING MUST ALL MEET N.E.C. CLASS 1, DIVISION 2 REQ'TS. FOR HAZARDOUS LOCATIONS PER MDEQ *Circular DEQ4-4.2.3.1*..

3. 110V FLOAT SWITCH CABLING TO BE RUN IN SEPARATE CONDUIT FROM PUMP POWER CABLES.

4. SUBMERSIBLE PUMP POWER CABLES PROVIDED BY PUMP MFR. & CANNOT BE SPLICED IN RUNS BACK TO PUMP VFD'S. SEPARATE RUNS REQ'D. FOR EACH PUMP. CONTRACTOR TO FIELD-VERIFY & PROVIDE ADEQUATE EQUIPMENT CABLE LENGTH. PROVIDE ADEQUATE SLACK IN CABLE FOR PUMP REMOVAL.

5. FLOAT SWITCH CABLES PROVIDED BY FLOAT MFR. & CANNOT BE SPLICED IN RUNS BACK TO PUMP RELAY CONTROL PANEL.CONTRACTOR TO FIELD-VERIFY & PROVIDE ADEQUATE EQUIPMENT CABLE LENGTH.

6. USE S.S. BOLTS W/ FENDER WASHERS OR BACKER PLATES TO MOUNT ALL ITEMS INSIDE F.R.P. ACCESS HATCHWAY PER F.R.P. TANK MFR'S. RECOMMENDATIONS. ORIENT ITEMS INSIDE HATCHWAY TO NOT INTERFERE W/ SUBMERSIBLE PUMP REMOVAL & TO MAINTAIN PUMP MFR'S. RECOMMENDED CLEARANCES.

7. RUN FLOAT SW. CABLES IN INDIVIDUAL (3) 1" PVC CONDUITS TO RELAY PANEL; PROVIDE CONDUIT SEALS.

8. N.E.C. COMPLIANT CONDUIT SEALS MAY BE USED INSTEAD OF AIR GAPS ON CABLE RUNS TO PANELS, AT CONTRACTOR'S OPTION.

designed: Alden G. Beard. P.E.
date: July 31, 2017
revised: Feb. 21, 2019

Lewis & Clark Caverns State Park
Upper Visitor Center Septic Replacement
DOSING PUMP WIRING DETAILS

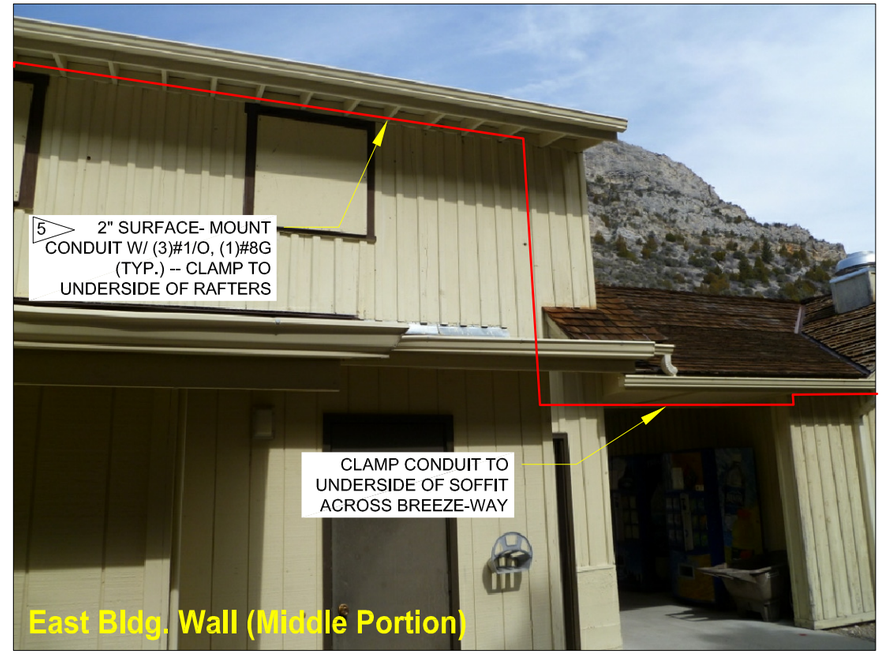

CONCESSION BLDG. CONDUIT ROUTING

no scale

NOTES:

1. USE CONDULETS TO MATCH CONDUIT SIZE, OR SURFACE-MOUNTED J-BOXES, AT ALL CHANGES IN DIRECTION, & AT TRANSITION TO UNDERGROUND RUNS .
2. FIELD-VERIFY ALL CONDUIT ROUTINGS, & AVOID CONFLICTS WITH OR OBSTRUCTING BLDG. OPENINGS & ROOF DRAINS.
3. SURFACE-MOUNT ALL CONDUITS W/ CONDUIT CLAMPS AT MAXIMUM OF 4'-0" O.C.
4. SEE ALSO SHT. 15 (ELECTRICAL SITE PLAN) FOR CONDUIT ROUTINGS.

5. AT CONTRACTOR'S OPTION & SUBJECT TO N.E.C. REQ'TS., EXPOSED CONDUIT CAN BE 1½" SIZE, RATHER THAN 2", SUBJECT TO SUBMITTAL REVIEW. UNDERGROUND PRIMARY POWER CONDUIT IS RECOMMENDED TO REMAIN 2" SIZE.

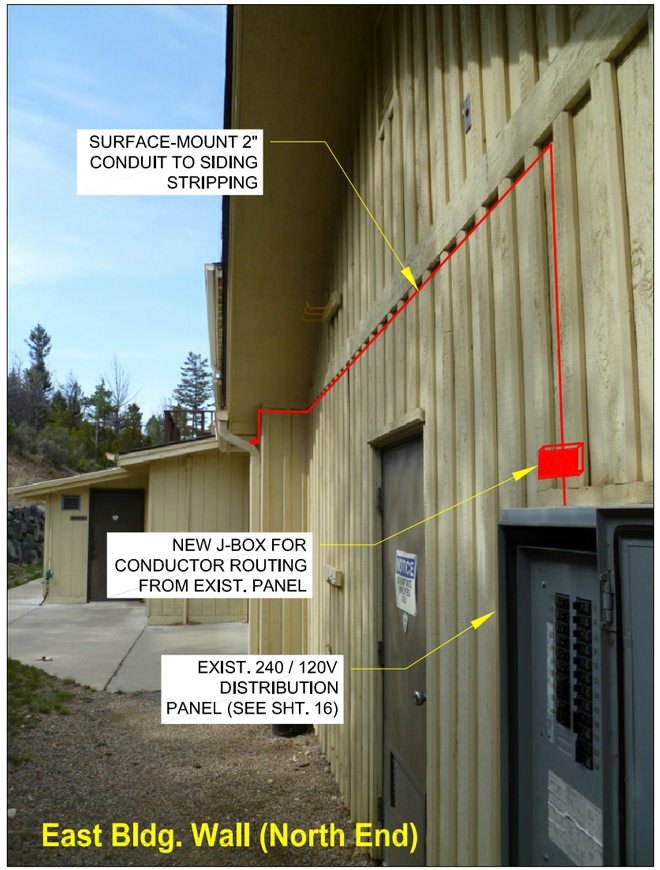

designed: Alden G. Beard. P.E.
date: Sept. 26, 2017
revised: Feb. 21, 2019

Lewis & Clark Caverns State Park
Upper Visitor Center Septic Replacement
POWER EXTENSION DETAILS

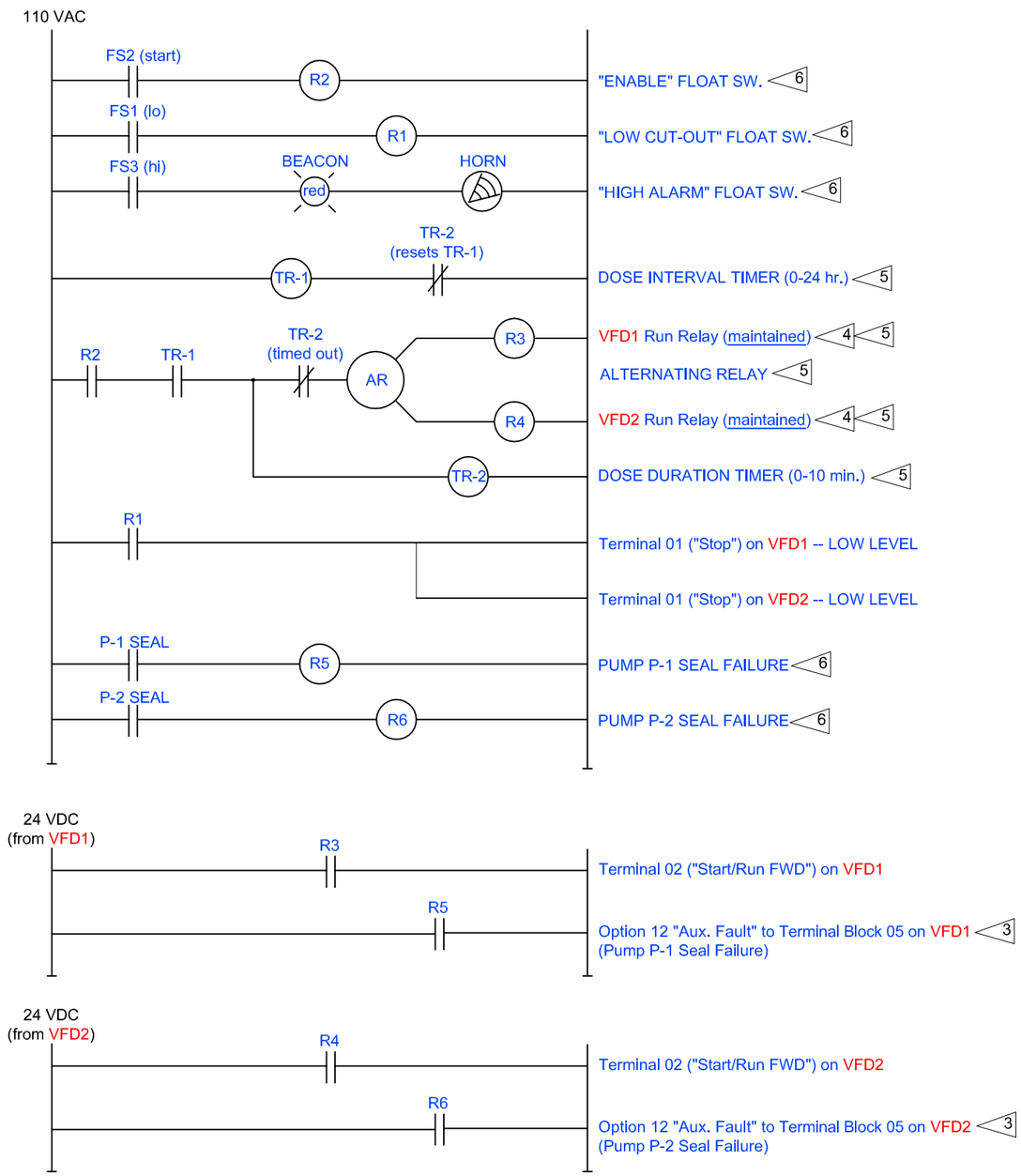

Dosing Pump Relay Control Panel Logic (Typ.) 2

no scale

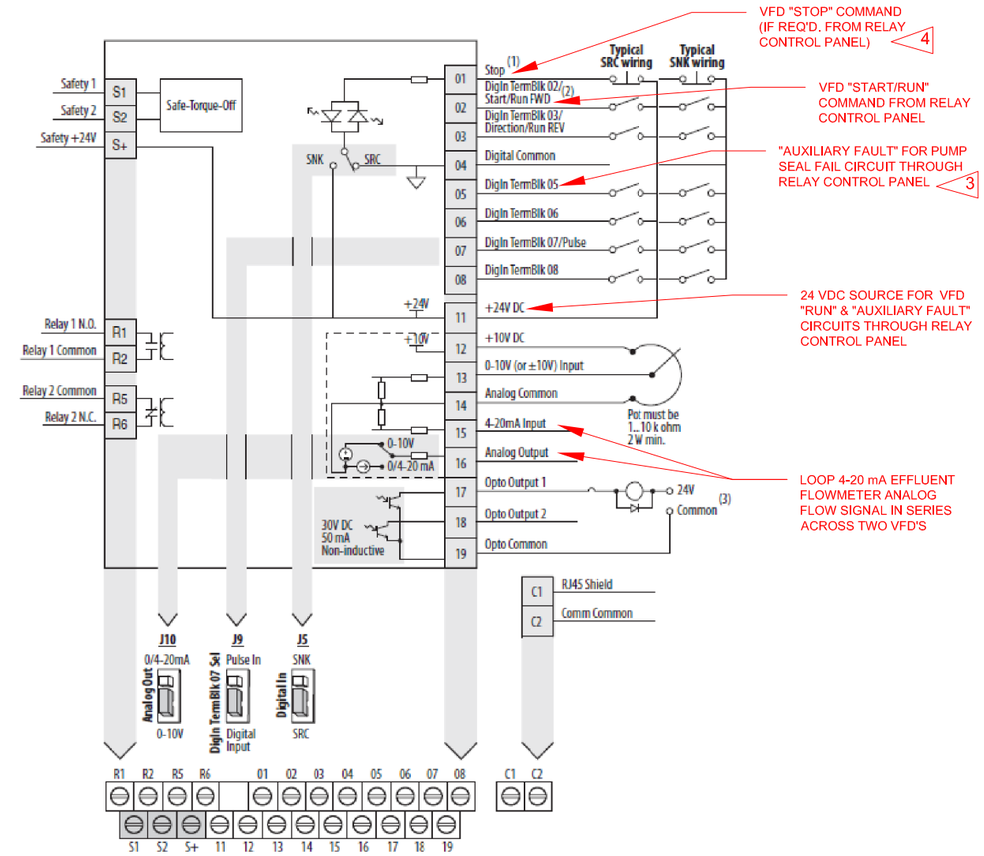

Dosing Pump VFD Terminal Wiring (Typ. of 2) 1

no scale

NOTES:

1. VFD TERMINAL WIRING SHOWN IS MFR'S. INFORMATION FOR *Allen Bradley/Rockwell PowerFlex 525* DRIVE(S) -- VERIFY WIRING REQ'TS. & MAKE ADJUSTMENTS TO ACHIEVE FUNCTIONALITY SHOWN IF OTHER DRIVE MODELS PROPOSED, SUBJECT TO REQ'TS. FOR SUBMITTAL REVIEW.

2. PUMP RELAY CONTROL LOGIC SHOWN BASED ON MANUFACTURER-MODIFIED MODEL *50A810 Duplex Time Dosing Panel* BY *Septic Products Inc.* -- VERIFY WIRING REQ'TS. & MAKE ADJUSTMENTS TO ACHIEVE FUNCTIONALITY SHOWN IF OTHER PRODUCTS PROPOSED, SUBJECT TO REQ'TS. FOR SUBMITTAL REVIEW.

3. "AUXILIARY FAULT" INDICATING PUMP SEAL FAILURE CAN BE CLEARED UNDER "OPTION 13" ON SAME VFD TERMINAL BLOCK -- IN THE EVENT OPERATOR WANTS TO CONTINUE TEMPORARILY RUNNING A PUMP EXPERIENCING SEAL (MOISTURE) FAILURE.

4. IF PUMP "RUN" RELAY/CONTACT STATUS IS NOT MAINTAINED (MOMENTARY), PROVIDE ADDITIONAL N.O. CONTACTS ON TR-2 & WIRE TO TERMINAL 01 "STOP" FOR EACH VFD.

5. THESE INDIVIDUAL RELAY FUNCTIONS SHOWN CAN ALL BE ACCOMPLISHED WITH *I.D.E.C. Gen. 6 Smart Relay* ELECTRONIC TIMING RELAY (SEE SPECIFICATIONS), SUBJECT TO REQ'TS. FOR SUBMITTAL REVIEW.

6. PROVIDE INTRINSICALLY SAFE RELAYS & FLOAT SWITCHES. DOSING PUMPS, CONTROLS, ALARMS & RELATED WIRING MUST MEET N.E.C. CLASS 1, DIVISION 2, REQ'TS. FOR HAZARDOUS LOCATIONS PER MDEQ *Circular DEQ4-4.2.3.1*.

sheet 19 of 25

designed: Alden G. Beard. P.E.
date: Sept. 20, 2017
revised: Feb. 21, 2019

Lewis & Clark Caverns State Park
Upper Visitor Center Septic Replacement
DOSING PUMP CONTROL SCHEMATICS