MATERIALS SCHEDULE

QTY.	UNIT	MATERIAL
		LUMBER & ROOFING
4	EACH	6"Φ X 10' MILLED PRESSURE TREATED PINE/FIR/LARCH POSTS
6	EACH	2 X 6 X 12' TONGUE AND GROOVE #1 DF/PINE DECKING
3	EACH	2 X 6 X 10' TONGUE AND GROOVE #1 DF/PINE DECKING
3	EACH	2 X 6 X 8' TONGUE AND GROOVE #1 DF/PINE DECKING
2	EACH	2 X 8 X 10' #1 DF/PINE
35	S.F.	30# ROOFING FELT
2	BUNDLE	OWENS-CORNING OAKRIDGE PRO 40 SHINGLES - BROWNWOOD COLOR
30	L.F.	BROWN ANODIZED ALUMINUM D STYLE DRIP EDGE
		MISCELLANEOUS HARDWARE
4	EACH	'SIMPSON' CB66 GALVANIZED STEEL POST BASE
8	EACH	5/8"Φ X 6 1/2" A307 MACHINE BOLTS W/ NUT AND WASHER (POST BASE TO POST)
18	EACH	3/8"Φ X 4 1/2" LAG SCREW W/ WASHER (ROOF ASSEMBLY AND FASCIA TO POST)
12	EACH	1/2"Φ X 3 1/2" LAG SCREW W/ WASHER (METAL SIGN FRAME TO POST)
4	EACH	'SIMPSON' A34 FRAMING ANCHOR
AS REQ'D		16d GALVANIZED BOX NAILS
AS REQ'D		1 1/4 GALVANIZED ROOFING NAILS

NOTE:
MATERIAL SCHEDULE QUANTITIES PROVIDED FOR CONVENIENCE ONLY.
VERIFY QUANTITIES PRIOR TO BIDDING, ORDERING OR CONSTRUCTION.

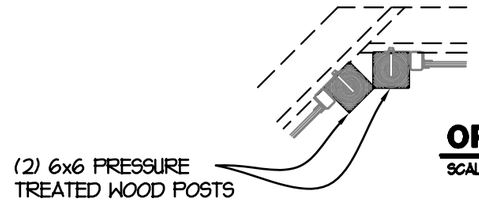

OPTIONAL SQUARE POST DETAIL

SCALE: NONE

3/2

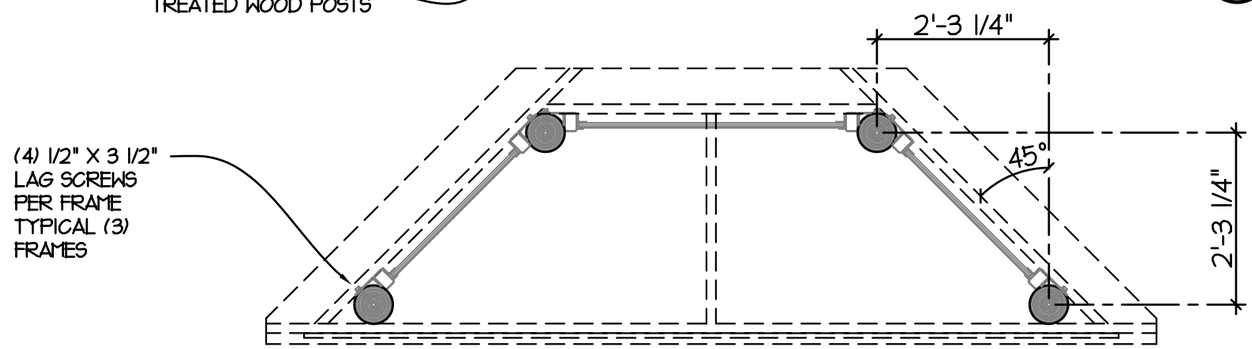

SECTION (PLAN VIEW)

SCALE: NONE

2/2

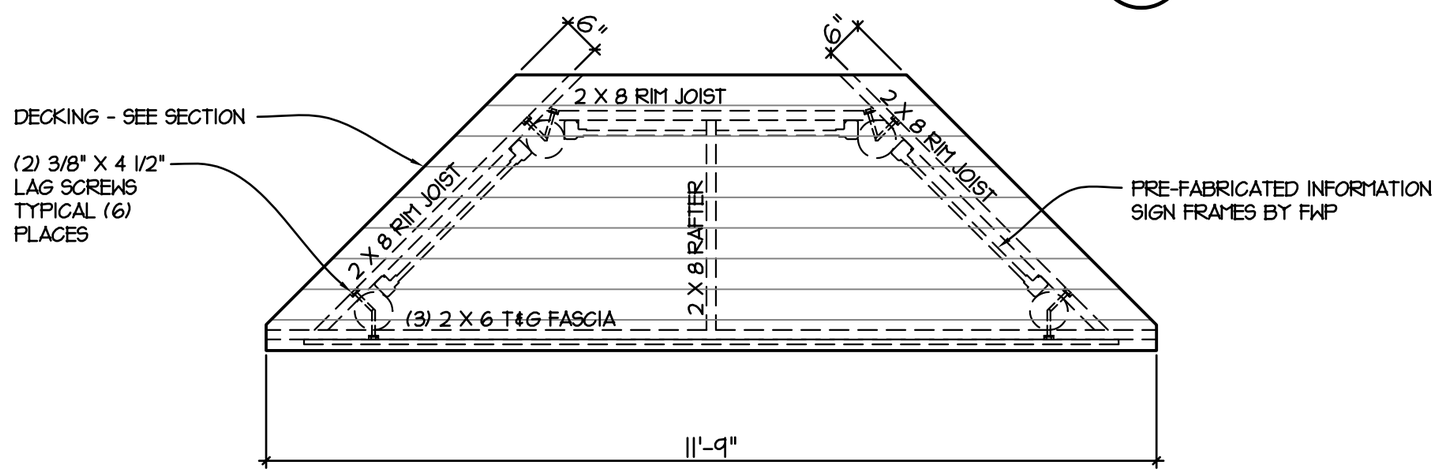

ROOF FRAMING PLAN

SCALE: NONE

1/2

B. Mangum February 22, 2005 DRAWN BY: DATE:	B. Mangum 3/11/2005 REVISED BY: DATE:	APPROVED BY: DATE:
CHECKED BY: DATE:	APPROVED BY: DATE:	APPROVED BY: DATE:

Montana Fish, Wildlife & Parks

Standard Kiosk
Montana State Parks

MONTANA STATE PARKS

SHEET: 2 of 2