PLANS FOR CONSTRUCTION OF:

MONTANA WILD EDUCATION CENTER GAZEBO PROJECT

HELENA, MONTANA
FWP PROJECT #17-16

MONTANA
JEFFREY L. LARSON
9455 P.E.
REGISTERED PROFESSIONAL ENGINEER
4-12-18

SHEET INDEX

TITLE SHEET	T1
SITE PLAN	C1
GAZEBO FLOOR PLAN	C2
GAZEBO SECTIONS	C3
NOTES AND DETAILS	C4
DETAILS	C5
GENERAL STRUCTURAL NOTES	S100
ROOF FRAMING AND FOUNDATION PLANS	S200
FOUNDATION DETAILS	S500
FRAMING DETAILS	S501
ELECTRICAL PLAN	E1

VICINITY MAP

LEGEND

EXISTING FEATURES

- BUILDING
- ASPHALT
- SIDEWALK
- DECOMPOSED GRANITE PATH
- ASPEN TREE
- LANDSCAPING ROCK
- SIGN
- WOOD FENCE
- CURB AND GUTTER
- FIRE HYDRANT
- —W— WATER MAIN
- ELECTRICAL JUNCTION BOX
- —UGP— UNDERGROUND ELECTRICAL POWER
- —IRR— IRRIGATION PIPING
- WATER MAIN EASEMENT

PROPOSED FEATURES

- DECOMPOSED GRANITE TRAIL
- SIDEWALK
- COLUMN
- —UGP— UNDERGROUND POWER
- —1" IRR— WATER LINE
- BOXED GROUND HYDRANT
- SEATING BOULDER
- BENCH
- 1000.82 SPOT ELEVATION

CIVIL SITE DESIGN BY:

LARSON CIVIL ENGINEERING, LLC

STRUCTURAL DESIGN BY:

REALIZE STUCTURAL ENGINEERING, INC.

ELECTRICAL DESIGN BY:

AMES ENGINEERING

J. LARSON	APRIL 12, 2018			
DRAWN BY:	DATE:	REVISED BY:	DATE:	APPROVED BY: DATE:
J. LARSON	APRIL 12, 2018	J. LARSON	APRIL12, 2018	
CHECKED BY:	DATE:	APPROVED BY:	DATE:	APPROVED BY: DATE:

Montana Fish, Wildlife & Parks

TITLE SHEET
MONTANA WILD EDUCATION CENTER GAZEBO PROJECT
FWP #17-16

LARSON CIVIL ENGINEERING, LLC
28 ANTLER AVENUE
CLANCY, MT 59634
406-443-6111
jeff@larsonce.com

SHEET: T1

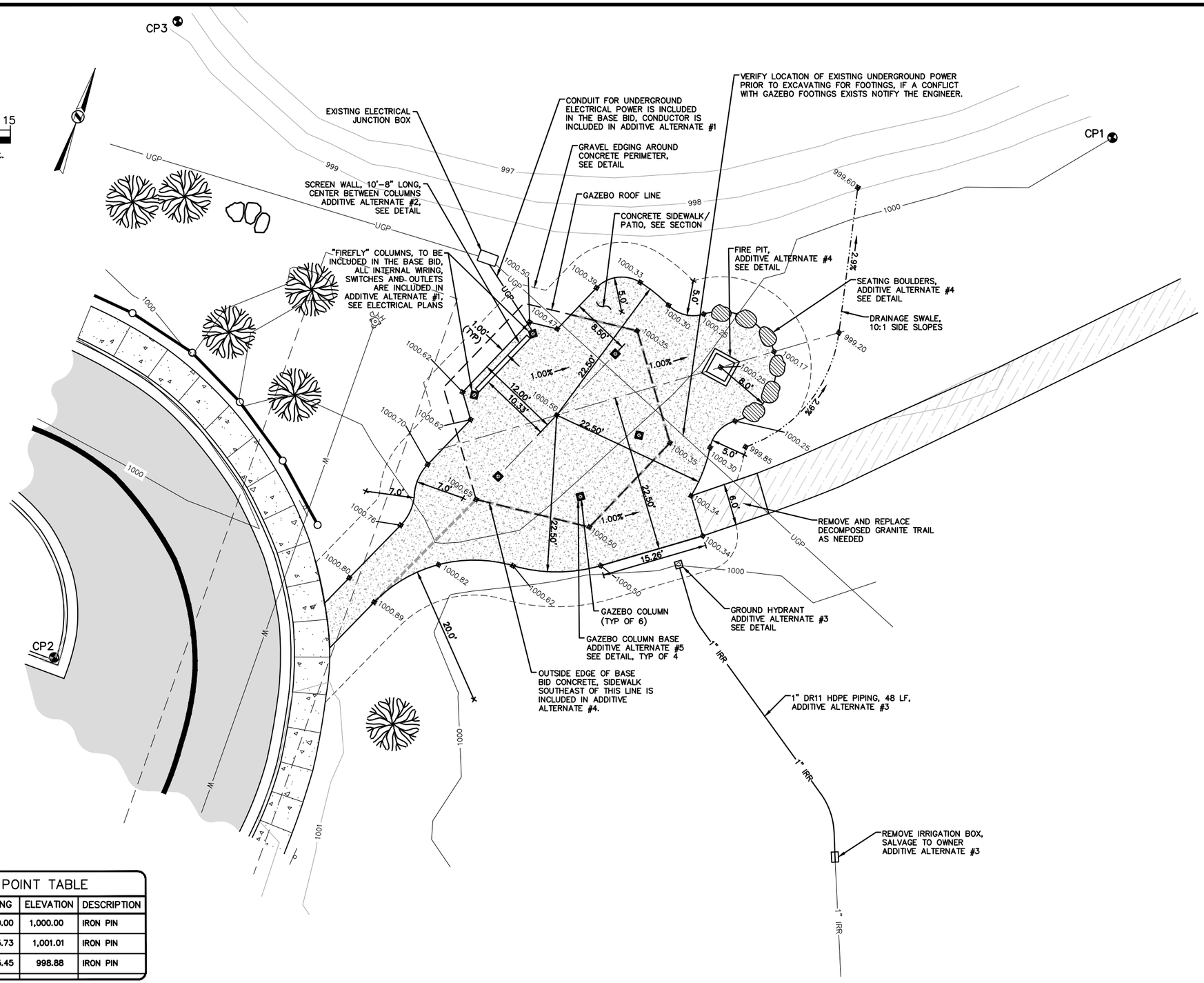

MONTANA PROFESSIONAL ENGINEER
JEFFREY L. LARSON
9455 P.E.
REGISTERED
4-12-18

CONTROL POINT TABLE				
POINT	NORTHING	EASTING	ELEVATION	DESCRIPTION
CP1	5,000.00	5,000.00	1,000.00	IRON PIN
CP2	4,859.44	4,905.73	1,001.01	IRON PIN
CP3	4,947.37	4,875.45	998.88	IRON PIN

ASSUMED DATUM

J. LARSON APRIL 12, 2018			
DRAWN BY: DATE:	REVISED BY: DATE:	APPROVED BY: DATE:	
J. LARSON APRIL 12, 2018	J. LARSON APRIL12, 2018		
CHECKED BY: DATE:	APPROVED BY: DATE:	APPROVED BY: DATE:	

Montana Fish, Wildlife & Parks

SITE PLAN

MONTANA WILD EDUCATION CENTER GAZEBO PROJECT
FWP #17-16

LARSON CIVIL ENGINEERING, LLC
28 ANTLER AVENUE
CLANCY, MT 59634
406-443-6111
jeff@larsonce.com

SHEET: C1

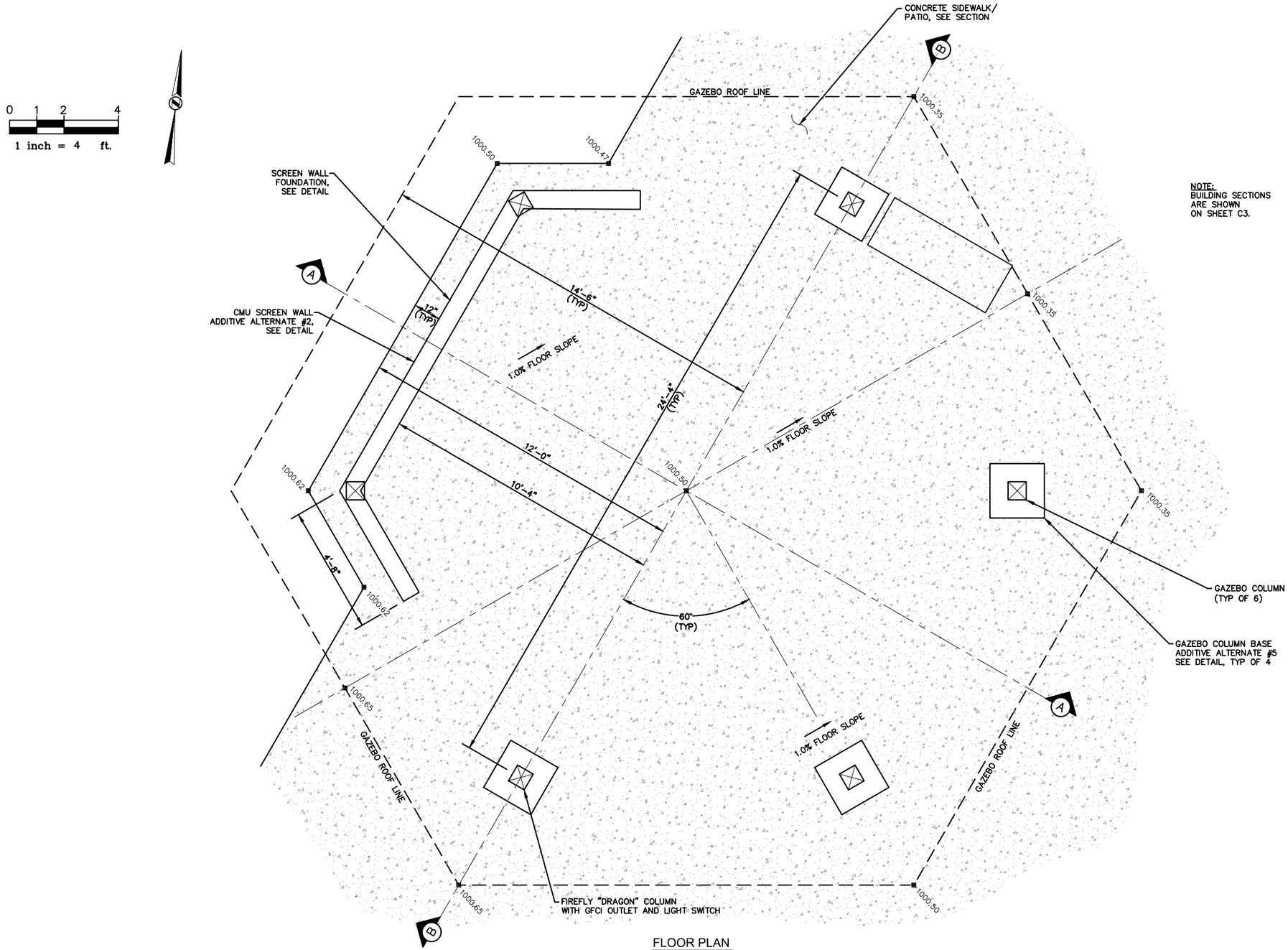

FLOOR PLAN
SCALE 1/4" = 1'-0"

NOTE:
BUILDING SECTIONS ARE SHOWN ON SHEET C3.

MONTANA PROFESSIONAL ENGINEER
JEFFREY L. LARSON
9455 P.E.
REGISTERED
4-12-18

J. LARSON	APRIL 12, 2018				
DRAWN BY:	DATE:	REVISED BY:	DATE:	APPROVED BY:	DATE:
J. LARSON	APRIL 12, 2018	J. LARSON	APRIL12, 2018		
CHECKED BY:	DATE:	APPROVED BY:	DATE:	APPROVED BY:	DATE:

Montana Fish, Wildlife & Parks

GAZEBO FLOOR PLAN

MONTANA WILD EDUCATION CENTER GAZEBO PROJECT
FWP #17-16

LARSON CIVIL ENGINEERING, LLC
28 ANTLER AVENUE
CLANCY, MT 59634
406-443-6111
jeff@larsonce.com

SHEET: C2

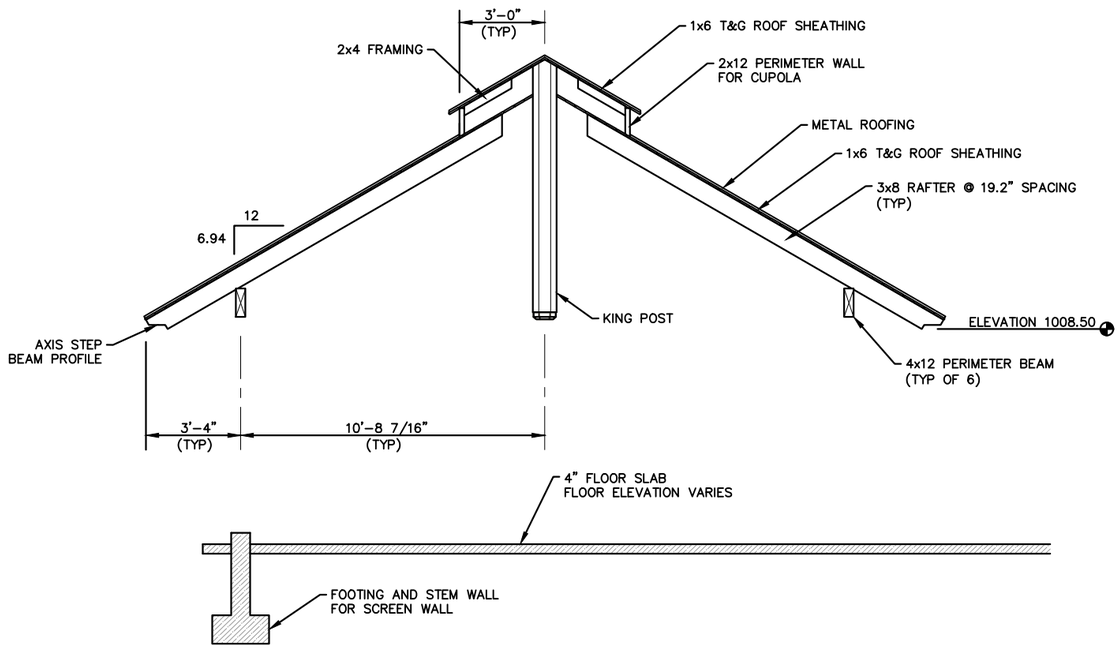

SECTION A-A
SCALE 3/16" = 1'-0"

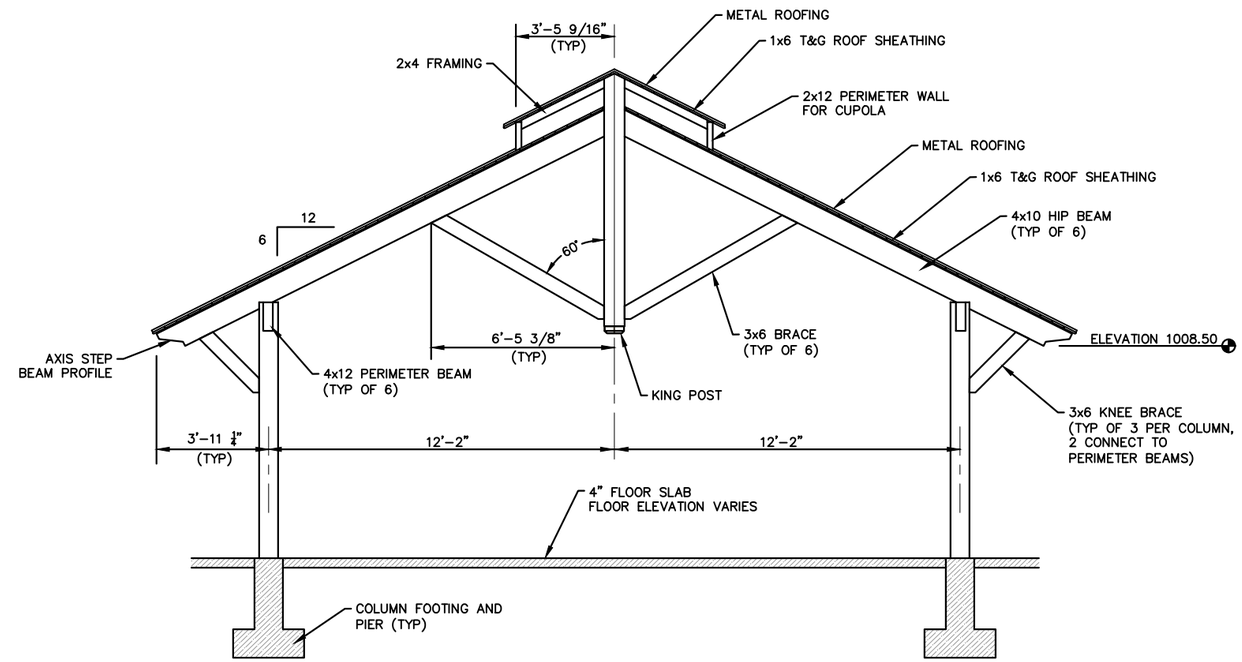

SECTION B-B
SCALE 3/16" = 1'-0"

MONTANA
JEFFREY L. LARSON
9455 P.E.
REGISTERED PROFESSIONAL ENGINEER
4-12-18

J. LARSON APRIL 12, 2018 DRAWN BY: DATE:	REVISED BY: DATE:	APPROVED BY: DATE:	Montana Fish, Wildlife & Parks	GAZEBO SECTIONS MONTANA WILD EDUCATION CENTER GAZEBO PROJECT FWP #17-16	LARSON CIVIL ENGINEERING, LLC 28 ANTLER AVENUE CLANCY, MT 59634 406-443-6111 jeff@larsonce.com
J. LARSON APRIL 12, 2018 CHECKED BY: DATE:	J. LARSON APRIL12, 2018 APPROVED BY: DATE:	APPROVED BY: DATE:			SHEET: C3

CONSTRUCTION NOTES:

1. ALL WORK SHALL BE CONSTRUCTED IN ACCORDANCE WITH "MONTANA PUBLIC WORKS STANDARD SPECIFICATIONS", SIXTH EDITION (MPW).
2. BEFORE DIGGING, CALL 811 TO LOCATE EXISTING UTILITIES.
3. EXISTING UTILITIES ARE SHOWN FOR REFERENCE ONLY. DEPTHS AND LOCATIONS ARE ESTIMATED. PRIVATE UTILITIES MAY NOT BE SHOWN. THE CONTRACTOR IS RESPONSIBLE TO LOCATE ALL UTILITIES PRIOR TO COMMENCING WORK. ANY CONFLICTS SHALL BE REPORTED TO THE ENGINEER.
4. MATERIALS TESTING SHALL BE PROVIDED BY THE CONTRACTOR AND SHALL INCLUDE 1 COMPACTION TEST PER 400 SF OF SIDEWALK AND/ OR PATIO ARE SUBGRADE. CONCRETE TESTING SHALL BE PER MPW STANDARD SPECIFICATION.
5. DISTURBED GROUND SURFACES SHALL BE RECLAIMED WITH A MINIMUM OF 4" OF TOPSOIL FOR SEEDING RECLAMATION. IMPORT ADDITIONAL TOPSOIL IF NECESSARY TO SUPPLEMENT THE TOPSOIL SALVAGED ON SITE.
6. A BUILDING PERMIT HAS BEEN SUBMITTED TO THE CITY OF HELENA FOR THIS PROJECT AND HAS BEEN PRE-APPROVED. THE CONTRACTOR IS RESPONSIBLE TO SIGN FOR THE PERMIT AND MEET ITS REQUIREMENTS INCLUDING COORDINATING INSPECTIONS. THE BUILDING PERMIT FEE WILL BE PAID BY THE OWNER.

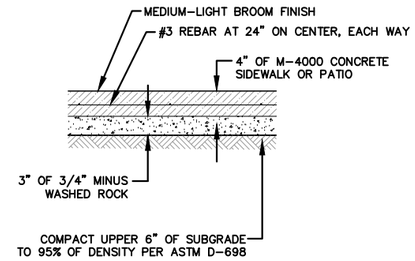

SIDEWALK AND PATIO AREA SECTION
NO SCALE

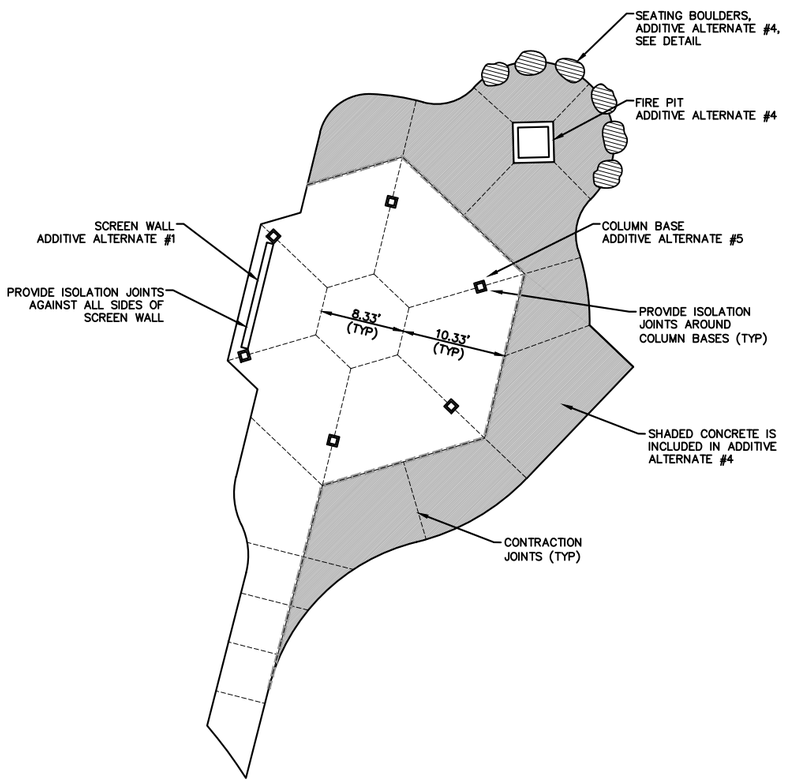

CONCRETE CONTROL JOINT DETAIL
NO SCALE

NOTE:
IF ADDITIVE ALTERNATE #2 IS AWARDED, THIS DETAIL WILL BE REPLACED BY THE SCREEN WALL – ADDITIVE ALTERNATE #2 DETAIL ON SHEET C4.

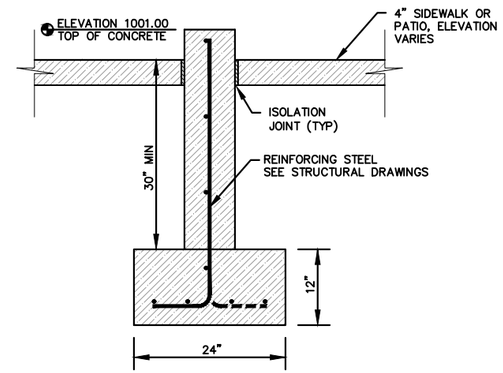

SCREEN WALL FOUNDATION
NO SCALE

NOTE:
IF ADDITIVE ALTERNATE #5 IS AWARDED, THIS DETAIL WILL BE REPLACED BY THE COLUMN BASE – ADDITIVE ALTERNATE #5 DETAIL ON SHEET C4.

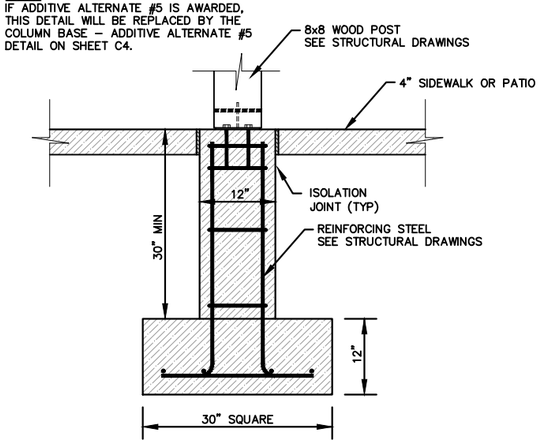

COLUMN BASE FOUNDATION
NO SCALE

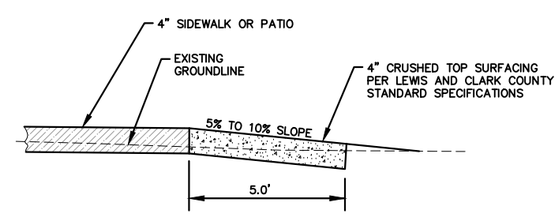

GRAVEL EDGING
NO SCALE

J. LARSON	APRIL 12, 2018				
DRAWN BY:	DATE:	REVISED BY:	DATE:	APPROVED BY:	DATE:
J. LARSON	APRIL 12, 2018	J. LARSON	APRIL12, 2018		
CHECKED BY:	DATE:	APPROVED BY:	DATE:	APPROVED BY:	DATE:

Montana Fish, Wildlife & Parks

NOTES AND DETAILS

MONTANA WILD EDUCATION CENTER GAZEBO PROJECT
FWP #17-16

LARSON CIVIL ENGINEERING, LLC
28 ANTLER AVENUE
CLANCY, MT 59634
406-443-6111
jeff@larsonce.com

SHEET: C4

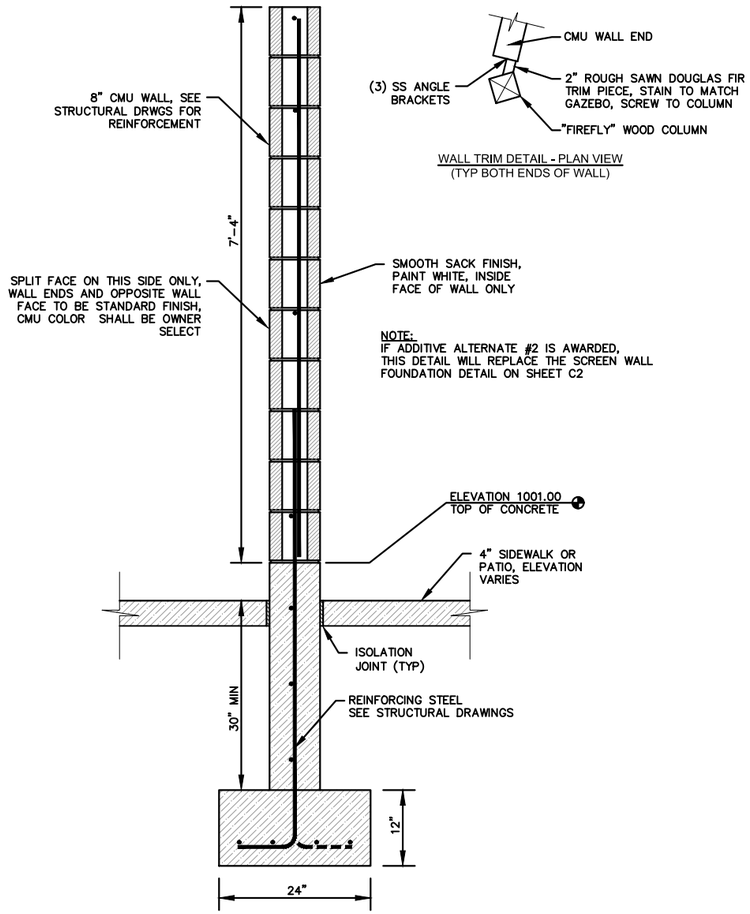

SCREEN WALL - ADDITIVE ALTERNATE #2
NO SCALE

WALL TRIM DETAIL - PLAN VIEW
(TYP BOTH ENDS OF WALL)

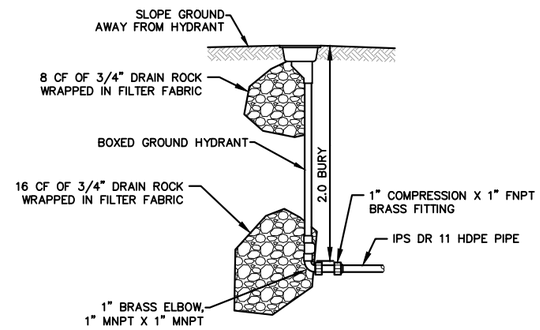

BOXED GROUND HYDRANT - ADDITIVE ALTERANATE #3
NO SCALE

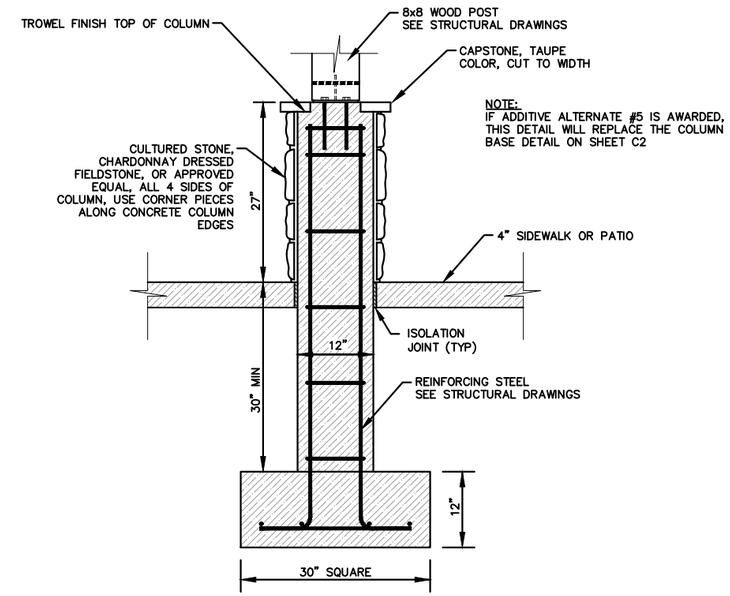

COLUMN BASE - ADDITIVE ALTERNATE #5
NO SCALE

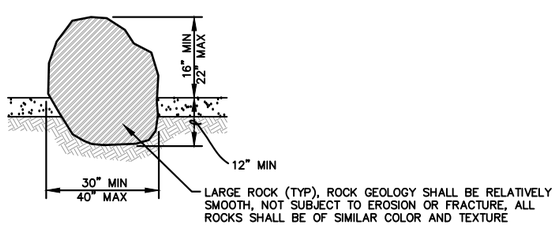

SEATING BOULDER - ADDITIVE ALTERNATE #4
NO SCALE

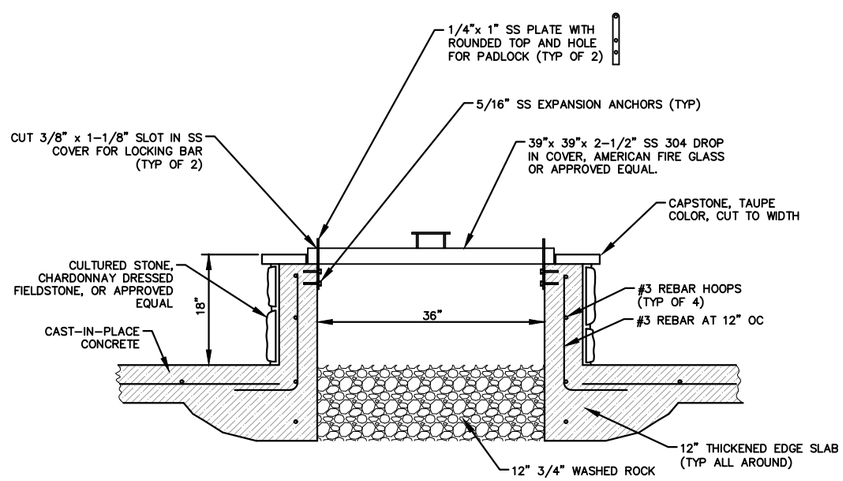

FIRE PIT - ADDITIVE ALTERNATE #4
NO SCALE

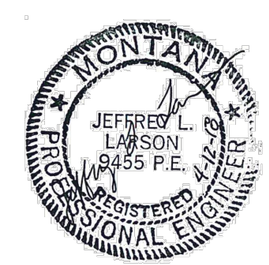

J. LARSON	APRIL 12, 2018				
DRAWN BY:	DATE:	REVISED BY:	DATE:	APPROVED BY:	DATE:
J. LARSON	APRIL 12, 2018	J. LARSON	APRIL12, 2018		
CHECKED BY:	DATE:	APPROVED BY:	DATE:	APPROVED BY:	DATE:

Montana Fish, Wildlife & Parks

DETAILS

MONTANA WILD EDUCATION CENTER GAZEBO PROJECT
FWP #17-16

LARSON CIVIL ENGINEERING, LLC
28 ANTLER AVENUE
CLANCY, MT 59634
406-443-6111
jeff@larsonce.com

SHEET: C5

GENERAL STRUCTURAL NOTES

GENERAL

1. CHANGES TO THESE CONTRACT DRAWINGS MAY BE MADE ONLY BY AN AUTHORIZED REPRESENTATIVE OF THE ENGINEER. THE ENGINEER SHALL NOT BE HELD RESPONSIBLE OR LIABLE FOR ANY CLAIMS ARISING DIRECTLY OR INDIRECTLY FROM CHANGES MADE WITHOUT WRITTEN AUTHORIZATION BY AN AUTHORIZED REPRESENTATIVE.
2. OMISSIONS OR CONFLICTS BETWEEN THE CONTRACT DRAWINGS AND/OR SPECIFICATIONS SHALL BE BROUGHT TO THE ATTENTION OF THE ENGINEER BEFORE PROCEEDING WITH ANY WORK INVOLVED. IN CASE OF CONFLICT, FOLLOW THE MOST STRINGENT REQUIREMENT AS DIRECTED BY THE ENGINEER AT NO ADDITIONAL COST TO THE OWNER.
3. THE CONTRACTOR SHALL BE RESPONSIBLE FOR MEANS, METHODS, TECHNIQUES, SEQUENCES, AND PROCEDURES IN ORDER TO COMPLY WITH THE CONTRACT DRAWINGS AND SPECIFICATIONS. THE CONTRACTOR SHALL PROVIDE ADEQUATE SHORING AND BRACING AS REQUIRED FOR THE CHOSEN METHOD OF ERECTION. SHORING AND BRACING SHALL REMAIN IN PLACE UNTIL FINAL CONNECTIONS FOR THE PERMANENT MEMBERS ARE COMPLETED. THE BUILDING SHALL NOT BE CONSIDERED STABLE UNTIL ALL CONNECTIONS ARE COMPLETED. WALLS, COLUMNS, OR PILASTERS SHALL NOT BE CONSIDERED SELF-SUPPORTING AND SHALL BE BRACED UNTIL THE FLOOR/ROOF SYSTEM IS COMPLETED.
4. THE CONTRACTOR SHALL SUBMIT A WRITTEN REQUEST TO THE ARCHITECT/ENGINEER BEFORE PROCEEDING WITH ANY CHANGES, SUBSTITUTIONS, OR MODIFICATIONS. ANY WORK DONE BY THE CONTRACTOR BEFORE RECEIVING WRITTEN APPROVAL WILL BE AT THE CONTRACTOR'S RISK.
5. THE CONTRACTOR SHALL VERIFY ALL SITE CONDITIONS AND DIMENSIONS. IF ACTUAL CONDITIONS DIFFER FROM THOSE SHOWN IN THE CONTRACT DRAWINGS, THE CONTRACTOR SHALL IMMEDIATELY NOTIFY THE ENGINEER BEFORE PROCEEDING WITH THE FABRICATION OR CONSTRUCTION OF ANY AFFECTED ELEMENTS.
6. ALL WORK SHALL BE DONE IN ACCORDANCE WITH OSHA REQUIREMENTS. POTENTIAL CONFLICTS BETWEEN THESE DOCUMENTS AND OSHA REQUIREMENTS SHALL BE BROUGHT TO THE ATTENTION OF THE STRUCTURAL ENGINEER BEFORE PROCEEDING WITH THE WORK.

BASIS FOR DESIGN

1. RISK CATEGORY — I
2. ROOF LIVE LOAD — 20 PSF
3. ROOF SNOW LOAD — 30 PSF
4. WIND LOAD
   - BASIC WIND SPEED (3 SECOND GUST) — 105 MPH
   - WIND EXPOSURE — B
   - INTERNAL PRESSURE COEFFICIENT — ± 0.18
5. SEISMIC DESIGN CRITERIA
   - MAPPED SPECTRAL RESPONSE ACCELERATIONS
     - SHORT PERIOD ACCELERATION — S_S = 0.541
     - 1-SECOND ACCELERATION — S_1 = 0.156
   - SITE CLASS (SOIL PROFILE) — D
   - SPECTRAL RESPONSE COEFFICIENTS
     - SHORT PERIOD ACCELERATION — S_{DS} = 0.515
     - 1-SECOND ACCELERATION — S_{D1} = 0.309
   - SEISMIC IMPORTANCE FACTOR — I/SEISMIC = 1.0
   - SEISMIC DESIGN CATEGORY D
   - EFFECTIVE STRUCTURAL SEISMIC WEIGHT — W
   - BASIC SEISMIC FORCE RESISTING SYSTEM — TIMBER FRAMES
   - RESPONSE MODIFICATION COEFFICIENT — R = 1.5
     - SYSTEM OVER-STRENGTH FACTOR — Ω_0 = 1.5
     - DEFLECTION AMPLIFICATION FACTOR — C_D = 1.5
     - DESIGN BASE SHEAR — $V = C_S * W$ = 34.3%
   - ANALYSIS PROCEDURE EQUIVALENT LATERAL FORCE
6. SERVICEABILITY CRITERIA
   - DEFLECTION LIMITS LIVE/SNOW, TOTAL
     - FLOOR — L/360 , L/240
     - ROOF — L/360, L/240
     - PERIMETER — L/600(3/8" MAX) –
   - INTER-STORY SEISMIC/WIND DRIFT — Δ /A < 0.02H ('H' IS STORY HEIGHT)

FOUNDATION

1. SOILS INVESTIGATION REPORT: — NONE
2. SOIL BEARING PRESSURE: — 1500 PSF – ASSUMED FOR DESIGN
3. CLEAR EXCAVATIONS OF DEBRIS AND LOOSE SOIL PRIOR TO PLACING FOOTINGS. ALL FOOTINGS SHALL BEAR ON UNDISTURBED NATURAL SUB-GRADE OR ENGINEERED COMPACTED FILL AS NOTED IN THESE DRAWINGS.

CONCRETE

1. MATERIALS UNLESS NOTED OTHERWISE:
   - NORMAL WEIGHT AGGREGATES — ASTM C 33
   - LIGHT WEIGHT AGGREGATES — ASTM C 330
     - LIGHT WEIGHT CONCRETE SHALL NOT EXCEED 110 PCF (± 3 PCF)
   - FLY ASH, CLASS F POZZOLAN — ASTM C618
   - REINFORCING STEEL
     - GENERAL — ASTM 615 GRADE 60 (60 KSI)
     - FRAME MEMBERS, SHEARWALL BOUNDARIES — ASTM A706 (60 KSI)
       ASTM A615 IS PERMITTED IF MILL CERTIFICATIONS ARE SUBMITTED SHOWING THAT ACTUAL YIELD STRENGTH DOES NOT EXCEED THE SPECIFIED STRENGTH BY MORE THAN 18000 PSI AND THE RATIO OF TENSILE TO YIELD STRENGTH IS GREATER THAN 1.25.
   - DEFORMED BAR ANCHORS (DBA) — ASTM A496
   - HEADED STUD ANCHORS (HSA) — ASTM A108
   - ANCHOR BOLTS: SEE STEEL AND/OR WOOD SECTION(S) OF GENERAL NOTES.
   - ADMIXTURES: AIR-ENTRAINING ADMIXTURES SHALL COMPLY WITH ASTM C 260 (WHEN USED).
   - CALCIUM CHLORIDE SHALL NOT BE ADDED TO THE CONCRETE MIX. EXCEPT UNREINFORCED CONCRETE SLABS ON GRADE MAY HAVE CALCIUM CHLORIDE NOT EXCEEDING ONE PERCENT.

   CEMENT COMPLYING WITH ASTM C-150 SHALL BE USED FOR ALL CONCRETE. SEE TABLE OF CONCRETE PROPERTIES FOR CEMENT TYPE. NO ALUMINUM CONDUIT OR PRODUCT CONTAINING ALUMINUM OR ANY OTHER MATERIAL INJURIOUS TO CONCRETE SHALL BE EMBEDDED IN CONCRETE.

Concrete Use	Exposure Classifications				Cement Type	(MIN) F'c (PSI)	(MAX) Cement Ratio	(MAX) Flayash Percent	(MAX) Air Content Percent	(MAX) Aggregate size	(MAX) Slump
Exterior Footings	F2	S0	P0	C1	I/II	3000	0.50	20	6	1"	6.00"
Exterior Slab on Grade	F2	S0	P0	C1	I/II	4000	0.45	20	6	3/4"	6.00"

3. THE CONTRACTOR SHALL BE RESPONSIBLE FOR THE DESIGN, DETAILING, CARE, PLACEMENT AND REMOVAL OF ALL FORMWORK AND SHORES. SUPPORTING FORMS AND SHORING SHALL NOT BE REMOVED UNTIL STRUCTURAL MEMBERS HAVE ACQUIRED SUFFICIENT STRENGTH TO SAFELY SUPPORT THEIR OWN WEIGHT AND ANY CONSTRUCTION LOAD TO WHICH THEY MAY BE SUBJECTED. IN NO CASE, HOWEVER, SHALL FORMS AND SHORING BE REMOVED IN LESS THAN 24 HOURS AFTER CONCRETE PLACEMENT. SUSPENDED SLABS SHALL BE RE-SUPPORTED AFTER FORM REMOVAL UNTIL CONCRETE REACHES ITS 28-DAY SPECIFIED COMPRESSIVE STRENGTH.
4. REINFORCEMENT SHALL HAVE THE FOLLOWING CONCRETE COVER: — CLEAR
   COVER:
   CAST-IN-PLACE CONCRETE
   - CAST AGAINST AND PERMANENTLY EXPOSED TO EARTH — 3" □
   - FORMED CONCRETE EXPOSED TO EARTH OR WEATHER:
     - #6 THRU #18 BARS — 2" □
     - #5 AND SMALLER BARS — 1 1/2"
   - CONCRETE NOT EXPOSED TO WEATHER OR IN CONTACT WITH GROUND:
     - SLABS, WALLS, JOISTS; #11 BARS AND SMALLER — 3/4"
     - BEAMS, COLUMNS: PRIMARY REINFORCEMENT, TIES,STIRRUPS, SPIRALS — 1 1/2"
5. CONSTRUCTION JOINTS AND CONTROL JOINTS:
   ALL HORIZONTAL AND VERTICAL CONSTRUCTION JOINTS, INCLUDING BETWEEN TOP OF FOOTING AND FOUNDATION WALLS, SHALL BE INTENTIONALLY ROUGHENED TO A FULL AMPLITUDE OF APPROXIMATELY 1/4".
   INSTALL CONSTRUCTION OR CONTROL JOINTS IN SLABS ON GRADE AT A SPACING NOT TO EXCEED 30 TIMES THE SLAB THICKNESS IN ANY DIRECTION, UNLESS NOTED OTHERWISE. CONTROL JOINTS SHALL BE INSTALLED IN SLABS ON GRADE SO THE LENGTH TO WIDTH RATIO OF THE SLAB IS NO MORE THAN 1.25:1. CONTROL JOINTS SHALL BE COMPLETED WITHIN 12 HOURS OF CONCRETE PLACEMENT.
   CONTROL JOINTS MAY BE INSTALLED BY EITHER:
   - SAW CUT WITH DEPTH OF 1/4 THE THICKNESS OF THE SLAB □
   - TOOLED JOINTS WITH DEPTH OF 1/4 THE THICKNESS OF THE SLAB

WOOD

1. MATERIALS
   DIMENSION LUMBER AND TIMBERS (SAWN LUMBER)
   - ALL DIMENSIONED LUMBER SHALL COMPLY WITH USDOC PS20.
   - VISUALLY GRADED DIMENSION LUMBER SHALL BE DOUGLAS FIR-LARCH #2 OR BETTER.
   - VISUALLY GRADED TIMBERS (5" X 5" AND LARGER) SHALL BE DOUGLAS FIR-LARCH #1 OR BETTER.
   - MACHINE STRESS RATED (MSR) LUMBER SHALL BE 1600F-1.6E OR BETTER.
   - END JOINTED LUMBER MAY BE USED INTERCHANGEABLY WITH SOLID SAWN MEMBERS OF THE SAME SPECIES AND GRADE WITH WRITTEN APPROVAL FROM THE ENGINEER.

   WOOD SHEATHING
   - WOOD SHEATHING SHALL HAVE THE FOLLOWING MINIMUM THICKNESSES AND SPAN RATINGS, UNLESS NOTED OTHERWISE:
     ROOF — 1X6 T&G
     NAILS OR OTHER APPROVED FASTENERS USED TO CONNECT SHEATHING TO THE STRUCTURE SHALL BE DRIVEN SUCH THAT THEIR HEAD OR CROWN IS FLUSH WITH THE SURFACE OF THE SHEATHING. DO NOT OVERDRIVE FASTENERS.

   BOLTS — CONNECTION BOLTS: ASTM A307 GRADE A/C/ OR A36
   - ALL BOLTED CONNECTIONS SHALL HAVE A STANDARD CUT OR LARGER WASHER ON BOTH SIDES OF THE CONNECTION (BETWEEN THE HEAD AND THE WOOD MEMBER AND BETWEEN THE NUT AND THE WOOD MEMBER).
   - BOLT HOLES SHALL BE A MINIMUM OF 1/32" TO A MAXIMUM OF 1/16" LARGER THAN THE BOLT DIAMETER. HOLES SHALL BE ACCURATELY ALIGNED IN MAIN MEMBERS AND SIDE PLATES OR SIDE MEMBERS. BOLTS SHALL NOT BE FORCIBLY DRIVEN.
2. CONNECTION HARDWARE
   - ALL CONNECTION HARDWARE SHOWN SHALL BE SUPPLIED BY FASTENMASTER TIMBERLOK CONNECTORS.
   - INSTALL ALL HARDWARE PER THE MANUFACTURER'S GUIDELINES.
   - CONNECTION HARDWARE OF EQUAL DESIGN PROPERTIES BY OTHER MANUFACTURERS MAY BE SUBSTITUTED WITH WRITTEN APPROVAL FROM THE ENGINEER.
3. ALL FASTENERS IN CONTACT WITH PRESSURE-TREATED OR FIRE-TREATED WOOD SHALL BE HOT-DIPPED ZINC-COATED GALVANIZED OR STAINLESS STEEL.
4. ALL WOOD IN CONTACT WITH CONCRETE, MASONRY OR SOIL SHALL BE PRESSURE TREATED OR REDWOOD.

POST-INSTALLED ANCHORS

1. FOLLOW ALL ICC EVALUATION REPORT AND MANUFACTURERS' REQUIREMENTS AND RECOMMENDATIONS FOR POST-INSTALLED ANCHOR INSTALLATION. WHERE CONFLICTS MAY EXIST, THE MOST STRINGENT REQUIREMENT APPLIES.
2. ALL HOLES IN HOLLOW, BRICK, OR STONE MASONRY SHALL BE DRILLED IN THE "ROTARY-ONLY" MODE WITH THE HAMMER FUNCTION OFF.
3. FOLLOW MANUFACTURER AND ICC EVALUATION REPORT REQUIREMENTS FOR INSTALLATION TEMPERATURE OF ADHESIVE ANCHORS. ADHESIVE ANCHORS SHALL NOT BE INSTALLED OR CURED OUTSIDE OF APPROVED TEMPERATURE RANGES.
   ADHESIVE ANCHORS IN CONCRETE SHALL BE
   - HIT RE-500 SD BY HILTI (ESR-2322) – NORMAL WEIGHT CONCRETE ONLY
   - SET-XP BY SIMPSON (ESR-2508)
   - PE1000+ BY POWERS FASTENERS (ESR-2583) – 1/2" TO 7/8" DIAMETER ONLY
4. THE CONTRACTOR MAY SUBMIT, FOR REVIEW AND APPROVAL, THE MANUFACTURER'S ICC EVALUATION REPORT OF ALTERNATE ANCHOR SYSTEMS. THE ALTERNATE METHOD SHALL PROVIDE MINIMUM CAPACITIES EQUAL TO OR GREATER THAN THOSE IN THE ABOVE NOTED ANCHORS. THE ALTERNATE METHOD SHALL BE APPROVED BY THE ENGINEER OF RECORD PRIOR TO THE SUBSTITUTION.
5. SPECIAL INSPECTION AND TESTING
   - SPECIAL INSPECTION SHALL BE PERFORMED ACCORDING TO THE REQUIREMENTS OF THE ICC EVALUATION REPORT, PER SECTION 1704.13 OF THE IBC.
   - TESTING SHALL BE DONE ACCORDING TO THE MORE STRINGENT REQUIREMENTS OF THE ICC EVALUATION REPORT AND THE VALUES LISTED BELOW.

MONTANA
RUSSELL D. MERRILL
11/30/2018
LICENSED PROFESSIONAL ENGINEER

REB	01-26-2018	REVISED BY: DATE:	APPROVED BY: DATE:	GENERAL STRUCTURAL NOTES	SHEET:
DRAWN BY:	DATE:			MONTANA WILD EDUCATION CENTER GAZEBO PROJECT	S100
REB	01-29-2018	APPROVED BY: DATE:	APPROVED BY: DATE:	FWP #17-16	
CHECKED BY:	DATE:				

Montana Fish, Wildlife & Parks

LARSON CIVIL ENGINEERING, LLC
28 ANTLER AVENUE
CLANCY, MT 59634
406-443-6111
jeff@larsonce.com