FRESNO RESERVOIR WILDLIFE MANAGEMENT AREA MANAGEMENT PLAN

December 19, 2017

TABLE OF CONTENTS

Table of Contents

EXECUTIVE SUMMARY **3**

PURPOSE OF THIS MANAGEMENT PLAN **4**

WILDLIFE MANAGEMENT AREA ESTABLISHMENT **4**

STATEWIDE GOAL FOR WMAS **4**

WMA GOAL **4**

DESCRIPTION OF WMA **5**

General Description 5

WMA Management Units 6

FRESNO WMA HABITAT MANAGEMENT UNITS **6**

HABITAT MANAGEMENT **9**

WETLANDS AND RIPARIAN HABITAT MANAGEMENT 9

UPLAND HABITAT MANAGEMENT 10

WEED MANAGEMENT **13**

INFRASTRUCTURE **14**

Infrastructure Management Objectives: 14

Wetland Enhancements 14

Fences 15

Roads 16

Signs 19

PUBLIC USE **20**

APPENDIX A – Decision Notice **21**

APPENDIX B – Current Lease Agreement **24**

APPENDIX C – Infrastructure **47**

APPENDIX D – Species List **54**

EXECUTIVE SUMMARY

Fresno Reservoir Wildlife Management Area (WMA) is located in Hill County approximately 23 miles northwest of Havre, MT, just upstream from Fresno Reservoir. At 2,677 acres, the WMA is administered by the Bureau of Reclamation (BOR) and has been managed by Montana Fish, Wildlife and Parks (FWP) through a series of Memoranda of Understanding (MOU). The first MOU was signed by both agencies in 1975; most recently a new MOU with a 20 year term was adopted in September 2013.

The primary goal of the Fresno WMA is to manage the wetland/riparian and upland habitats for the benefit of wildlife with waterfowl being the focus. The WMA also benefits a variety of other game and nongame birds, mammals, reptiles, and amphibians. A commensurate goal of the WMA is to provide public opportunity for outdoor recreation, primarily in the forms of hunting, trapping and bird watching.

There are two broad habitats that make up Fresno WMA –uplands make up the majority of the WMA (75%) and are comprised of native mixed grassland. A complex of riparian and constructed wetland habitats associated with the Milk River floodplain make up the remaining 25% of the WMA.

Before the WMA was established, upland vegetation was heavily impacted by domestic livestock grazing. The area was described in the original FWP proposal to create the WMA in 1975, as having almost completely lost all vegetation, seriously impacting wildlife habitat and other natural resource values. From 1975 until 1992, no grazing was permitted on the WMA; however, trespass livestock were common throughout this period of time due to insufficient boundary fences. Since 1992, managed grazing on the WMA has been applied to provide more effective nesting cover for game birds. In general, the uplands appear to be recovering from previous overgrazing.

The riparian areas provide tree and shrub cover mostly adjacent to the Milk River. Wetlands have been enhanced through construction of dikes. One dike was constructed in the mid-1970s (FWP with BOR), and additional dikes were added in 1988 (FWP and Ducks Unlimited) to establish two large wetland impoundments, totaling 28 and 127 acres respectively. These impoundments were designed to capture water by overland flow from the Milk River during high flow events, often due to ice jams in the spring. Since construction, the wetlands have been managed to provide productive breeding habitat as well as spring and fall migration habitat for waterfowl by capturing high water levels in the impoundments whenever possible. However, during the record spring runoff of 2011, the Milk River channels migrated and new gravel bars formed, affecting year round water flow patterns associated with the impoundment system. Currently, wetlands are regularly filled naturally from the north through new channels that were created. In addition, a significant increase in beaver activity in the primary outlet area has caused water levels in the wetlands and riparian zones to be permanently elevated to the point where manual water manipulation is no longer possible, and associated woody vegetation is

dying out due to flooding. Under these conditions, the once separated wetlands now function essentially as one large wetland that is approximately 330 acres in size.

PURPOSE OF THIS MANAGEMENT PLAN

In order to accomplish primary goals set forth for Fresno WMA, objectives and management strategies are detailed in this plan that address specific issues. FWP anticipates this plan will serve the needs of Fresno WMA during the term of the MOU with BOR. Per requirements of that MOU, FWP will review the plan on a 5-year interval or more often as needed to provide updates and new information, which would be in the form of addenda to this plan.

WILDLIFE MANAGEMENT AREA ESTABLISHMENT

In the 1970's, the State of Montana was facing a growing demand for outdoor recreation while at the same time, losses in wildlife habitat were occurring. Because of such factors, the State of Montana established new game management areas to secure quality habitat and to provide expanded opportunities for recreation. Fresno WMA is one of these areas.

The Montana Fish and Game Commission originally entered into an agreement with the BOR in 1975 to administer and develop fish and wildlife lands and facilities of the Fresno Reservoir area. The land is located within what was at the time determined to be one of the most productive waterfowl area in Northern Montana, and the primary purpose for managing the land was to add to this productivity.

STATEWIDE GOAL FOR WMAS

Montana's Wildlife Management Areas are lands managed by Montana Fish, Wildlife and Parks to benefit a diversity of wildlife species and their habitats on behalf of the public and provide compatible public access for fish and wildlife recreation.

WMA GOAL

The primary goal of the Fresno WMA is to manage the wetland/riparian and upland habitats for the benefit of wildlife with waterfowl being the focal species. The WMA will further benefit a variety of birds, mammals, reptiles, and amphibians. A commensurate goal of the WMA is to provide public opportunity for outdoor recreation, primarily in the forms of hunting, trapping, fishing, hiking, wildlife viewing, and bird watching.

DESCRIPTION OF WMA

General Description

Fresno WMA is located in Hill County approximately 23 miles northwest of Havre, MT (Figure 1). The WMA is bounded on the northeast side by a 3 mile segment of free-flowing Milk River, above the upper end of Fresno Reservoir. The WMA is part of a largely intact native habitat corridor that extends along the Milk River from Fresno Reservoir northeasterly to the Canadian border. Croplands occur extensively in the general area, comprising 64% of the land within a 5 mile radius of the WMA. Other cover types within the 5 mile radius include 19% grass, 8% floodplain/wetlands/water, 5% introduced vegetation including CRP, and 3% badlands. The WMA, comprising 2,677 acres, is administered by the BOR and managed by FWP through a MOU (Appendix A).

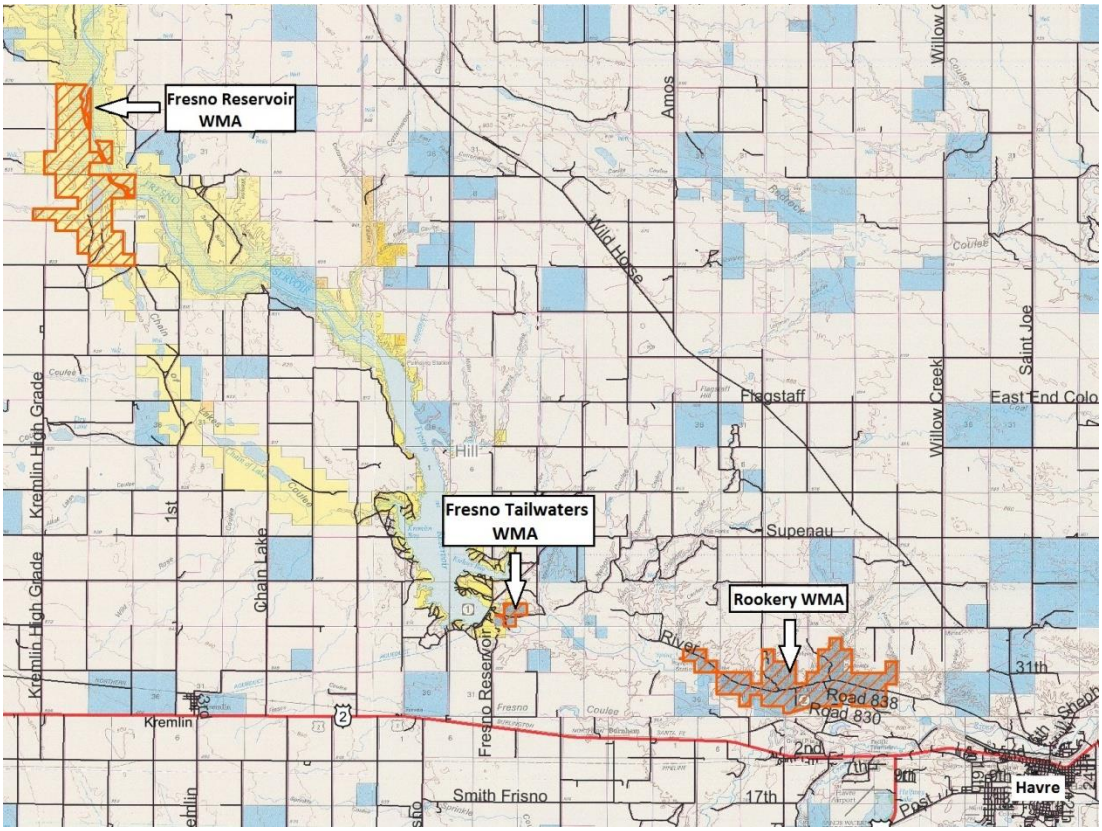

Figure 1: General location of Fresno WMA, located northwest of Havre

Approximately 75% of the WMA is uplands and the remaining 25% is wetland/riparian habitat. The uplands comprise native mixed grass prairie dominated by blue grama, needle and thread, western wheatgrass, green needle grass, prairie junegrass, and Sandberg's bluegrass. A low density of silver sagebrush and greasewood also occurs on the upland sites. Wetland habitats include manmade and natural impoundments totaling approximately 330 acres. Wetland

vegetation includes emergent vegetation along shorelines and islands dominated by cattail and bulrush. Submergent vegetation includes sago pondweed, duck weed, coontail, and native water-milfoil. Riparian habitat is confined to the Milk River floodplain and included 152 acres of Great Plains cottonwood, peach leaf and sandbar willow, buffaloberry, and Russian olive. Approximately 45% of this woody riparian habitat has either been submerged or is now seasonally flooded due to changes in water flow patterns since the flood of 2011.

The nearest climate data available for the WMA is for Havre. Havre receives an average of 11 inches of precipitation including 43 inches of snow annually. The number of days with any measurable precipitation is 90. On average, there are 182 sunny days per year. The average July high temperature is around 84 degrees and the average January low is 5.

WMA Management Units

The Fresno Reservoir WMA is composed of one contiguous tract of land. There are no in-holdings within the boundaries of the property. This WMA plan considers two broad habitat features as distinct management units – upland mixed grasslands and the wetland/riparian complex (Figure 2).

Figure 2: Overview of Fresno WMA taken from the uplands into the flooded water impoundment.

FRESNO WMA HABITAT MANAGEMENT UNITS

Upland Mixed Grasslands

The upland habitat comprises the majority of the WMA. While some crested wheatgrass has encroached into the southwest portion of the WMA, the main graminoid species comprising this habitat includes blue grama, needle and thread, western wheatgrass, green needle grass, prairie

junegrass, and Sandberg's bluegrass. Shrub species including silver sagebrush, greasewood, and winterfat occur in these habitats as well. The grasslands provide nesting cover for upland nesting game birds and grazing habitat for several big game species.

Prior to becoming a WMA, vegetation was heavily impacted by uncontrolled continuous grazing and was described in the original WMA proposal as having almost completely lost all vegetation. A long-term objective for the WMA has been to rehabilitate upland vegetation through controlled grazing practices, yet until 1992, trespass livestock grazing was a reoccurring problem due to poor fencing. However, since 1992, a rest-rotation grazing system has been implemented across the entire WMA.

An assessment of the uplands by FWP staff in 2014 found that while evidence indicative of historical overgrazing was present, relative condition of the uplands has improved since FWP took over management of the WMA. Evidence of historic overgrazing includes dense stands of blue grama found throughout the hillsides and hilltops, which typically persist for long periods of time. Other indications of overgrazing are evident on the valley floors south and west of the slough where native plant species are present but not in the proportions and combinations one would expect in less disturbed sites and introduced species are also more prevalent.

Throughout the uplands, in comparison to earlier historic descriptions, areas with bare soils have diminished and soils have stabilized. There is no longer any accelerated soil erosion, as historical head cuts have healed and are revegetating with grasses, and rills are rare. Bare soils are stable as indicated by the presence of cryptogams and increased organic litter, and grasses are not pedestalled, which would be expected if active erosion was still occurring.

These observations indicate the uplands have healed considerably, and appear to be stable, with an overall apparent positive trend. Preliminary plans are being developed for a vegetation monitoring program starting in 2016, which will further assess condition and trend in the future to ensure habitat conditions remain stable and/or continue to improve.

Wetland/Riparian Habitat

The wetland/riparian habitat comprise approximately 680 acres of the WMA. Within this habitat, there are manmade and natural water impoundments that are approximately 330 acres in size. Emergent vegetation along shorelines and islands is dominated by cattail and bulrush. Submerged vegetation includes sago pondweed, duck weed, coontail, and native water milfoil. The riparian zones in the river floodplain support sandbar willow, peachleaf willow, Great Plains cottonwood, buffaloberry, and Russian olive, adding to the diversity of habitats in the area.

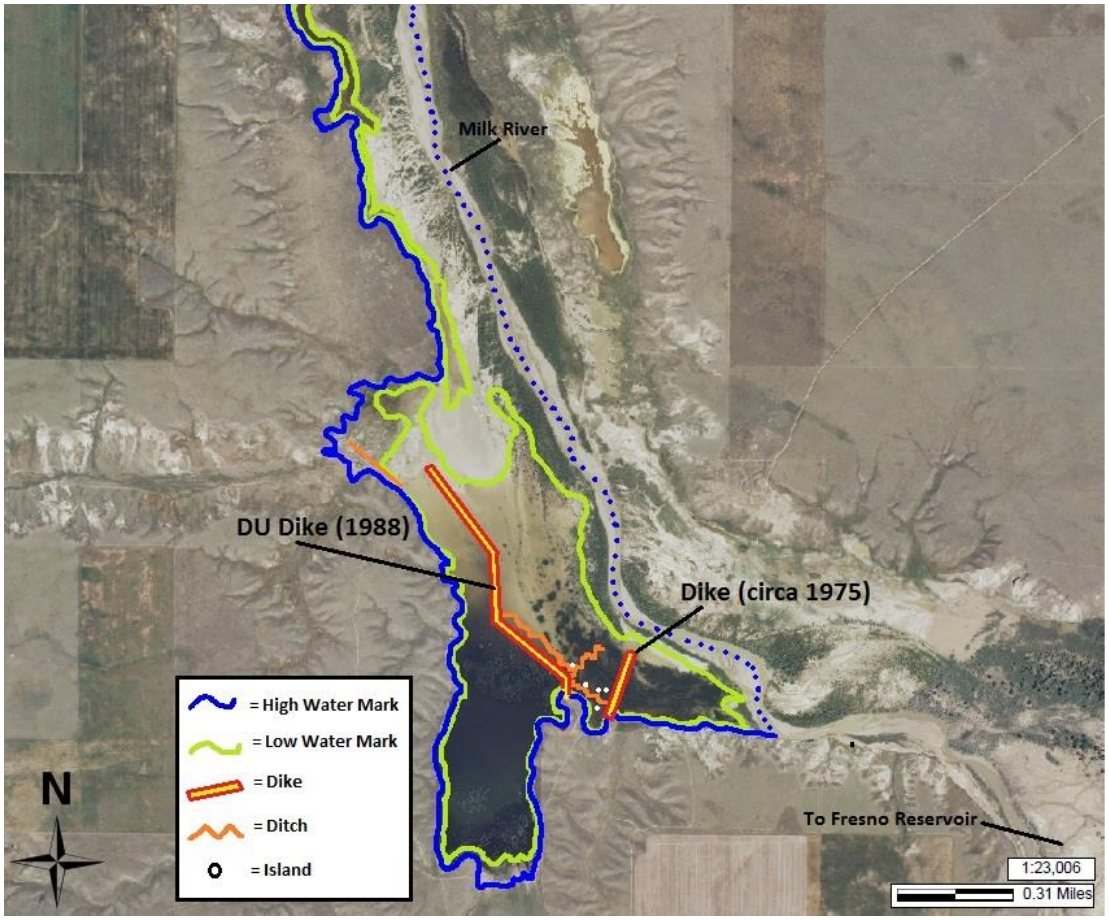

Figure 3: Aerial photo of Fresno WMA wetland enhancement structures and the current approximate high and low water shoreline

The wetland impoundments were developed to provide productive breeding habitat as well as spring and fall migration habitat for waterfowl. The dike system captured water during high river flows, such as spring floods and winter ice jams, and included the capability to manage water levels when desired. Periods of drought periodically caused natural draw downs, making managed draw downs unnecessary. The dikes received maintenance work in 2002 and then again in 2005 to keep them functional. However, changes occurred during the record spring runoff of 2011, including Milk River channel migration and formation of new gravel bars, directly affecting year-round water flow patterns associated with the impoundment system. Currently, the wetlands receive water more consistently and for a longer duration. Beaver dam activity downstream from the primary outlet has caused water levels in the wetlands and riparian zones to be elevated. The high static water levels have eroded the dikes and submerged the water control structures, making water level management impossible.

The riparian habitats provide hiding cover and browse for white-tailed deer as well as nesting and foraging areas for perching birds and other wildlife. Emergent vegetation provides habitat for a variety of wildlife, including marsh wrens, red-winged and yellow headed blackbirds and wintering pheasants. With the elevated water levels since 2011 (Figure 3), a significant portion of the woody habitat drowned,

and it is unclear how much will persist or establish within new riparian zones Within the confines of what is practical and cost effective, FWP intends to manage these areas to allow wetland and riparian vegetation to reestablish.

HABITAT MANAGEMENT

WETLANDS AND RIPARIAN HABITAT MANAGEMENT

Natural river systems are notorious for being dynamic with ever shifting channels and deposition zones. The flood of 2011 and the persisting elevated water levels have submerged considerable portions of the river's riparian zones, but also exposed new mud flats. Elevated water levels have (at least temporarily) reduced the amount of shrubs and trees along the river. Downstream beaver activity is inaccessible to heavy equipment and may persist into the future. Although the dike system isn't functioning as originally designed, the wetlands are extensive and support use by waterfowl and other wildlife. Any attempt to manage downstream beaver activity appears to be cost prohibitive and working against a relatively well functioning and naturally operating system.

Wetlands and Riparian Habitat Management Objectives:

Manage wetland impoundments as productive waterfowl breeding and migration habitat while also allowing for riparian restoration.

Wetlands and Riparian Habitat Management Actions:

Enhanced Wetlands

- Monitor enhanced wetlands for changing water levels on a monthly schedule from March until fall freeze up. Currently, manipulating water within the impoundments is not possible. A significant change in flows or beaver activity would be cause for re-assessing management options. If changes occur that allow manipulations of water levels, periodic monitoring and management of water levels from March until fall freeze up would occur. *High priority if manipulating water becomes possible.*

- Selectively reduce cattail choked areas to restore breeding pair and brood rearing habitat. Cattail control options will be limited until ability to manage water levels, including drying out the water impoundments, is restored. Under current water conditions, herbicide treatment is about the only option that could be used. If natural water levels recede and water manipulation abilities are restored, mowing, livestock grazing, or other

mechanical manipulation are options for reducing cattails. *Medium Priority if water levels recede.*

Figure 4: Wetlands enhanced by the construction of the S-shaped ditches and DU Dike

Woody Vegetation and Riparian Zones

- Allow natural succession processes to re-establish riparian vegetation. Use photo plot monitoring on a 3-year schedule and aerial imagery, starting in 2016, to assess and document progression and to assure management actions support riparian restoration. *High priority.*

Figure 5: Flooded woody vegetation impacted by elevated water levels

UPLAND HABITAT MANAGEMENT

When the Fresno WMA was established, the land was described as being subjected to severe overgrazing by livestock, primarily cattle, resulting in substantial impacts to native vegetation. Initially, upon taking over management of the area, the Montana Fish and Game Department (now FWP) attempted to keep livestock off the property entirely to help restore vegetation. This was a source of nearly continuous conflicts because of trespass livestock on the property and livestock traveling through

the property to neighboring lands (Appendix E). Fence condition and maintenance were apparently inadequate to effectively preclude grazing.

In 1992, a formal rest-rotation grazing system was implemented. Although vegetation has improved under the grazing system, it has not been evaluated. While initial field evaluations conducted in 2014 indicate improved native rangeland conditions (Figure 6), there is neither baseline data nor any trend data to determine to what extent the upland habitat is meeting the original purposes, which included: providing nesting cover for game birds, grazing habitat for Canada geese, and providing restoration of the native mixed grass plant community.

As a stand-alone parcel, the WMA provides benefits for wildlife that are limited to the bounds of the WMA. However, the WMA is part of a broader corridor of habitats associated with the Milk River, including floodplains, adjacent croplands (some of which have been restored to grasslands through the Conservation Reserve Program), and wetland complexes. This intact native habitat corridor extends along the Milk River from Fresno Reservoir upstream 23 miles to the Lost River WMA.

Upland Habitat Management Objective:

Provide for the restoration of native mixed grassland integrity and the direct benefits to wildlife at a scale that extends beyond the WMA.

Upland Habitat Management Actions:

Wildlife

- Conduct grassland bird surveys to establish a baseline reference of bird use on the WMA. *Medium Priority*

Vegetation

- Establish vegetation monitoring transects for identifying plant composition and trends. Provide a more detailed assessment of native rangeland ecological health on the WMA. *High Priority*

- Explore options for larger, landscape level enhancements through working with neighboring landowners. *Medium Priority*

Neighboring Landscape

- Work with neighboring landowners to develop voluntary “win-win” conservation measures that expand conservation benefits beyond the WMA. This could be accomplished through cooperative upland game bird habitat enhancement projects, grazing management agreements, or other land management opportunities. *Medium Priority*

- Enhance habitats on the WMA while working with neighboring landowners (private and public) on broader conservation measures that are consistent with working landscapes. *Medium Priority*

Figure 6: Typical vegetation in the uplands, and revegetation in the river valley following flooding.

WEED MANAGEMENT

While noxious weed infestations on the WMA have been limited in the past, the primary noxious weed species in need of control has been Canada thistle (*Cirsium arvense*). There have been both chemical and biological controls implemented to manage these weed species. Weed distribution and treatment locations are recorded by FWP personnel. Noxious weeds can impact native vegetation used by wildlife for food and cover. Infestations of weeds can be hard to control in some areas due to limitations of chemical use adjacent to water. Off road travel causes ground disturbance and can be a source for new infestations. Weed management and control continues to be a high priority.

Weed Management Objectives:

Prevent, contain, reduce, and/or eradicate noxious weeds on Fresno WMA and prevent dispersal of weed seed from the WMA.

Management Actions

- Continue to manage weeds in a manner consistent with FWP's "Statewide Integrated Noxious Weed Management Plan". *High Priority.*

- Continue to develop and maintain an inventory of noxious weeds on the WMA. *High Priority.*

- Continue to control noxious weeds annually with emphasis on new starts and areas of heavy public use, such as WMA roads and parking areas. Emphasis should also be placed on property boundaries. Chemical selection and use is restricted in some areas due to adjacent water. *High Priority.*

- Any weed infestation on one landownership is likely to spread to adjacent lands. Work cooperatively with adjacent landowners and the Hill County Weed Board to control weed infestations across the broader landscape. *High Priority.*

INFRASTRUCTURE

Infrastructure on the WMA includes fences, roads, wetland enhancements, and signs. Fences serve to define WMA boundaries as well as control livestock grazing in the area. The roads serve to provide motorized public and administrative access to portions of the WMA. Dikes, ditches, water control structures, and nesting structures have been built to enhance the wetlands and riparian zones. Signs serve to provide information to the public users. Deterioration of the infrastructure over time through natural processes and from public requires monitoring and maintenance. The WMA will be maintained according to FWP's Wildlife Management Area Maintenance Standards.

Infrastructure Management Objectives:

Infrastructure on the WMA will be maintained according to FWP's WMA Maintenance Standards. Maintaining infrastructure on the WMA in functional condition will promote public recreation consistent with purposes of the WMA, and help maintain credibility as good neighbors and responsible land managers.

Wetland Enhancements

In 1975, an 850 foot long earthen embankment with a fixed level culvert was constructed to impound overflow from the Milk River and Fresno Reservoir. In 1988, a large Ducks Unlimited project was completed that included four main developments: 1.) a 3,924-foot long earthen embankment with a variable level water control structure; 2.) approximately 2,015 feet of s-shaped level ditches between the new embankment and Milk River designed to provide additional breeding pair territories and brood travel corridors, and to improve water flow through the marsh between water control structures; 3.) creation of small islands along the level ditches to provide nesting and loafing areas for waterfowl; and 4.) a 1,100-foot long diversion channel to divert run-off water into the impoundment. A number of nesting structures were also installed in the water impoundments.

Because of the 2011 flood and associated channel migration, which resulted in more water flowing into the dike system, and because of downstream beaver activity, the ability to manage water levels or effect a periodic drawdown is currently (at the time of writing this plan) not a viable option. High static water levels have submerged the water control structure, and have eroded portions of the dike system. Specifically, the 3,924 foot long dike constructed in 1988 has been eroded by wave action. In the event water levels recede, it is unclear what condition the water control structure will be in (Figure 7). In its current state (at the time of writing this plan), static water levels are providing extensive wetland habitat, which brings into question any substantial management change (such as removing beaver dams) that would be cost effective and of lasting benefit. Presumably, the natural aspects of the wetland system will result in periodic drying during drought periods, which will result in enhanced wetland productivity.

All nesting structures have been found to be vulnerable to ice action and the culvert type nest structures, which were expected to be a low-maintenance option, consistently lose soil fill, which settles out the bottom into the wetland basin, making them inoperable or even a hazard if newly hatched chicks are unable to climb out of the structure. All nest structures require considerable annual maintenance to keep them functional. Past monitoring confirms that the structures are mostly used by Canada geese.

Management Actions:

- If water flow characteristics in the system changes, allowing for possible water level management, review feasibility of making repairs to the dike and water control structure. *High Priority*

- Maintain the remaining functional nest structures with hay bales and remove those that are no longer functional. *Medium Priority*

Estimated cost for the next 10-year period will depend largely on chosen management direction if the wetland system reverts back to is historic functioning state and how much of the constructed system remains functional. Until such time, the system appears to be self maintained by beaver activity. Estimated cost for maintaining functional nest structures over the next 10 years is less than $1,000.

Figure 7: Erosion on the DU (1988) dike and the flooded water control structure

Fences

Currently, the entire boundary of the WMA is fenced, with exception of the eastern boundary which is the Milk River. Two cross fences also exist on the WMA and serve to minimize trespass livestock issues and provide effective control of grazing when grazing leases have occurred on the WMA. Periodically, fences along the river have been compromised due to ice jams and wind deposited silt from neighboring fields have affected some stretches of boundary fence.

Management Actions

- Continue to annually inspect and maintain approximately 11.5 miles of boundary and approximately 2.5 miles of cross fences. *High Priority*
-
- As of the writing of this plan, the west boundary fence has built up silt from neighboring cropland. This has been a recurring problem. Fortunately, farming practices have changed and wind erosion is not as evident as it had been. Within the next 5 years, silt deposition will need to be addressed along with fence replacement. Timing of this work will depend in part on likelihood of livestock trespass issues and prior completion of necessary cultural resource evaluations *Medium Priority*

- Where chronic problems exist (such as ice jams), continue using alternative fencing options. Temporary electric fence is usually installed after spring thaw and spring run-off periods and then removed post grazing period.

Estimated cost for the next 10-year period to maintain and repair fences is $30,000 to $50,000.

Figure 8: An example of a fence that needs relocation due to increased water levels.

Roads

There are no improved roads or parking areas within the boundaries of the WMA. Several two-track trails exist, but due to elevated water levels some are submerged or softened and rutted and some of these trails are in need of maintenance. There currently are no designations as to what roads are available to motorized travel. Extraneous routes that receive periodic use by motorized vehicles are a source of weed infestation, disturbance to vegetation, and soil erosion. In addition, fire danger caused by overland vehicle use or parking over tall vegetation is a concern. Delineation of open trails could increase the amount of security available for wildlife on the WMA.

Management Actions

- Recognize the main routes within the WMA as designated public motorized routes (Figure 9).

- Annually mow motorized routes and parking areas to help reduce fire hazard and to help delineate open routes, as needed. *High Priority*

- If high water continues, adjust motorized routes to avoid flooded/wet areas and minimize the potential for rutting and erosion. *Medium Priority*

- Replace the existing culverts on the north trail at a higher elevation in order to reduce flooding problems and improve administrative access. *Medium Priority*

Estimated cost for the next 10-year period to maintain roads and parking areas is $3,000 to $6,000.

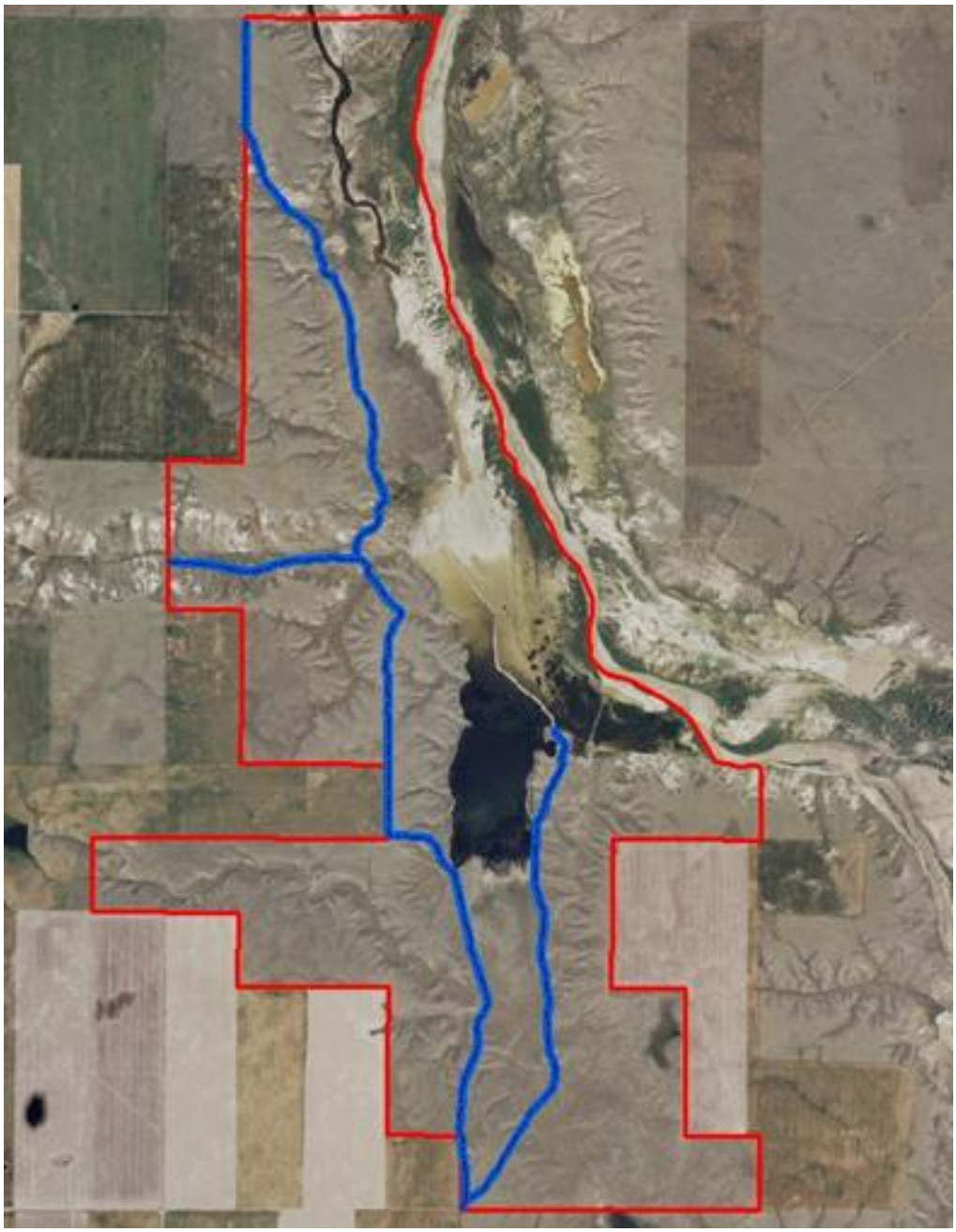

Figure 9: Designated Motorized Routes on Fresno WMA

Signs

Information for WMA users is limited to one entrance sign located at the southern entrance, and few boundary signs exist. WMA users that trespass on neighboring landowners can erode FWP/Landowner/Hunter relations, and there is a general lack of onsite information regarding rules and legal uses of the WMA. Sufficient information should be available to WMA users to ensure users obey WMA rules, and to minimize trespass issues.

Management Actions

- Continue to annually inspect and maintain boundary, road, and entrance signs. Signs will be installed and maintained according to FWP WMA maintenance standards. *High Priority*

Estimated cost for the next 10-year period to maintain and repair signs is $1,500 to $3,000.

Figure 10: Vandalized entrance sign to Fresno WMA located at the southern entrance.

PUBLIC USE

Commission rules regarding public use of all WMAs statewide are revised/adopted on a biennial schedule (http://fwp.mt.gov/fishAndWildlife/wma). As a general objective, public access to the WMA is intended to be as uncomplicated as possible with the intent of supporting public recreational opportunities so long as they do not conflict with FWP rules or the primary purposes of the WMA. Necessary restrictions include no use of motor vehicles off designated routes, pets kept under control, and no fires.

The Fresno WMA provides opportunity for outdoor recreation, primarily in the form of hunting, trapping, fishing, and bird watching. Level of recreational use on the WMA, particularly during summer, is not fully known. Habitat effectiveness, public user enjoyment, and plant community health are dependent in part on responsible use by public users of the WMA, and therefore, effective compliance of WMA rules and hunting regulations is important.

Management Objective – Provide waterfowl, upland game bird, and big game hunting opportunities. Provide additional year-round wildlife-related recreational opportunities such as bird watching and wildlife photography.

Management Action

- Continue to patrol the WMA, monitor public use, and show an FWP presence. *High Priority*

- Enforce WMA rules. Enforcement of Montana law and WMA rules helps maintain or improve relationships with neighboring landowners and law-abiding hunters and recreationists. In general, basic rules common to all WMAs should apply to Fresno WMA, unless there are specific circumstances that require additional rules. *Medium priority*

APPENDIX A – Decision Notice

Fresno Reservoir Wildlife Management Area Management Plan
Montana Fish, Wildlife & Parks
Region 6
1 Airport Road
Glasgow, MT 59230
December 19, 2017

Wildlife Management Area Plan

The Fresno Reservoir Wildlife Management Area (WMA) is located on Bureau of Reclamation property in Hill County, but is managed by Montana Fish, Wildlife & Parks (MFWP) through a long-term management agreement. The WMA is managed to conserve and enhance native upland and riparian areas for the benefit of wildlife with a focus on waterfowl. A secondary goal of the WMA is to provide public opportunities for outdoor recreation including, hunting, fishing, trapping, and bird watching.

In order to assist MFWP in attaining these goals, a draft management plan was created. The management plan identifies objectives and management strategies to be implemented by MFWP staff. The management plan helps regional staff prioritize funding and manpower. Some actions identified in the plan may require a separate analysis and public review, consistent with the Montana Environmental Policy Act.

MFWP proposes to accept the Draft Fresno Reservoir WMA Management Plan as Final.

Public Involvement

Public comment on the draft management plan was accepted for 30 days from March 29, 2017 through April 27, 2017. During this comment period, the draft management plan was available on both the MFWP website and at the Regional and Havre Area offices. A press release was issued and news articles regarding the proposal appeared in the Billings Gazette and Havre Daily News. Notifications of the availability of the draft management plan and the opportunity to comment were mailed to neighboring landowners and other interested parties.

Summary of Public Comments

MFWP received comments from two individuals regarding the Fresno Reservoir WMA Draft Management. The two commenters were supportive of the plan, but both included recommendations

for changes to the plan. All the comments received were primarily related to roads and travel management on the WMA

FWP Response to Public Comments

Comment--Would like to see priority for shifting motorized routes in flooded areas increased from medium to high priority.

MFWP Response- MFWP identified this issue in the draft management plan. The flooding in the spring of 2011 altered water flow in the area which resulted in increases in the size of wetlands and flooding of some fences and roads. The primary reason this management action wasn't prioritized at a higher level was the uncertainty regarding the current water conditions. MFWP wanted to ensure that water levels were stable prior to making modifications to roads and fences. It is possible that water levels could either continue to increase or return to historic patterns as drier conditions return.

Comment-Recommend more signs identifying closed roads on the WMA.

MFWP Response- MFWP had signed some roads on the Fresno WMA as closed in the past. New trails appear regularly and make signing all trails closed infeasible. Existing road closure signs on the WMA also required regular replacement or maintenance. MFWP determined it would be more effective to identify which roads are open to the public for motorized vehicle use and classify all other roads/trails as being closed to vehicle use. MFWP may still erect road closure signs in problem areas, but the absence of these signs would not imply a road or trail was open for motorized use.

Comment Recommend providing paper maps available to the public at the entrance to the WMA.

MFWP Response- MFWP does not typically provide paper maps on-site at WMAs. WMA maps are available through the MFWP website. MFWP has temporarily provided paper maps at one of the WMAs in Region 6. MFWP has determined it is not feasible to keep maps available on-site year-round at all WMAs in the region. One alternative that may be implemented in the future on the Fresno Reservoir WMA would be to provide a permanent map for reference at the entrance to the Fresno Reservoir WMA

***Comment-- Recommend parking areas be identified/established to reduce potential fire danger*.**

MFWP Response- One of the management actions identified in the plan was to mow identified parking areas on the WMA as needed. Many areas on the WMA are primarily shorter grass species, low enough that fire danger associated with parked vehicles in these areas is relatively low. FWP does not plan to develop improved (gravel) parking areas, due to the increased disturbance of native vegetation and subsequent weed issues.

MFWP FINAL DECISION

After reviewing this management plan and the public comments received, it is MFWP's decision to approve the Fresno Reservoir Wildlife Management Plan as final. Noting and including the responses to the public comments, the Draft Management Plan will become the Final Management Plan. MFWP believes the completion of this plan will help the department manage and enhance the upland, wetland,

and riparian habitats in this area for the benefit of wildlife and provide recreational opportunity for the public.

Mark Sullivan
Regional Supervisor

12/20/2017
Date

Ken McDonald
Wildlife Division Administrator

1/5/2018
Date

APPENDIX B – Current Lease Agreement

Agreement No. R13MU60014

MANAGEMENT AGREEMENT
BETWEEN
THE U.S. DEPARTMENT OF THE INTERIOR,
BUREAU OF RECLAMATION
AND
THE STATE OF MONTANA,
FISH, WILDLIFE AND PARKS
FOR THE
ADMINISTRATION OF LANDS
IN THE
FRESNO RESERVOIR WILDLIFE MANAGEMENT AREA

Article No.	Table of Contents	Page No.
1	Term of Agreement	2
2	Miscellaneous Provisions	2
3	Reclamation Use Paramount	3
4	Adjustment to Land Areas Shown on Exhibit "A"	3
5	Soil and Water Conservation	3
6	Reservations	4
7	Land Management Plan	4
8	Third Party Contracts and Permits	4
9	Fees and Charge	5
10	Visitor Use	5
11	Examination of Records	5
12	Facility Development	6
13	Liability of Contractors and Permittees	6
14	Title to Land, Improvements and Restoration	6
15	Review of Administration	7
16	Debris and Waste Removal	7
17	Safety and Unauthorized Use	7
18	Termination	8
19	Default	8
20	Accident Reporting	9
21	Variation in Water Level	9
22	Consumptive use of Water by FWP	9
23	Certification of Non-Segregated Facilities	9
24	Construction Materials and Mining	10
25	Risk – Damages	10
26	Protection of Resources	10
27	Notices	13
28	Contingent on Appropriation or Allotment of Funds	13
29	Modification of Agreement	13
30	Official or Employees Not to Benefit	14
	Signature Page	14

i

Exhibits:

Exhibit A -	Map Reclamation Land within the Fresno Wildlife Management Area
Exhibit B -	Reclamation Land Use Stipulation
Exhibit C -	Environmental Requirements
Exhibit D -	Equal Opportunity Requirements
Exhibit E -	Title VI, Civil Rights Act of 1964
Exhibit F -	Summary of Reporting Requirements

Agreement No. 13-AG-60-0001

MANAGEMENT AGREEMENT
BETWEEN
THE U.S. DEPARTMENT OF THE INTERIOR,
BUREAU OF RECLAMATION
AND
THE STATE OF MONTANA,
FISH, WILDLIFE AND PARKS
FOR THE
ADMINISTRATION OF LANDS
AT
FRESNO RESERVOIR
FOR
FISH AND WILDLIFE PURPOSES

This Management Agreement (Agreement), made this 30th day of September 2013, in accordance with the Reclamation Act of 1902 (ch. 1093, 32 Stat. 388; 43 USC 391 et seq.), as amended and supplemental; Economy Act of 1932 (ch. 314, 31 USC 1535), as amended; Reclamation Project Act of 1939 (ch. 418,53 Stat. 1187; 43 USC 485 et seq.); Federal Water Project Recreation Act of 1965 (Pub. L. 89-72; 79 Stat. 213, 214; 16 USC 460*l* et seq.), as amended; Architectural Barriers Act of 1968 (Pub. L. 90-480, 82 Stat.718; 42 USC 4151 et seq.); Rehabilitation Act of 1973 (Pub. L. 93-112; 87 Stat. 355; 29 USC 701 et seq.), as amended; Reclamation Recreation Management Act of 1992 (Pub. L. 102-575, Title XXVIII; 106 Stat. 4690; 16 USC 460*l*-31-460*l*-34), as amended; Law Enforcement Authority at Bureau of Reclamation Facilities, 2001(Pub. L. 107-69; 115 Stat. 593; 43 USC 373b); Federal Lands Recreation Enhancement Act of 2004 (Pub. L. 108-447, Div. J, Title VIII; 118 Stat. 3378; 16 USC 6801 et seq.); 43 Code of Federal Regulations (CFR) part 21, *Occupancy of Cabin Sites on Public Conservation and Recreation Areas;* 43 CFR part 24, *Department of the Interior Fish and Wildlife Policy*; 43 CFR part 420, *Off Road Vehicles*; 43 CFR part 423, *Public Conduct on Bureau of Reclamation Facilities, Lands, and Waterbodies*; 43 CFR part 429, *Use of Bureau of Reclamation Land, Facilities, and Waterbodies*; and Reclamation project specific authorities; and Montana Fish, Wildlife, and Parks statutory authority under W.S. 23-1-302 (a)(x)(xi); between the United States of America, acting through the Department of the Interior, Bureau of Reclamation, hereinafter termed "Reclamation", represented by the officer executing this instrument on its behalf, successor officers or duly authorized representatives; and, Montana Fish, Wildlife and Parks, hereinafter termed "FWP".

WITNESSETH, THAT:

WHEREAS, Fresno Reservoir is a multipurpose development providing irrigation water, flood control, and conservation purposes as a component of the Milk River Project;

WHEREAS, the real property shown on Exhibit A, attached hereto and incorporated herein, is owned, administered and maintained by Reclamation for Project purposes, is identified as the Fresno Wildlife Management Area and shall be the only lands associated with this agreement;

WHEREAS, FWP desires to manage the Fresno Wildlife Management Area for public recreation, wildlife, and other resource uses; and,

WHEREAS, Reclamation desires to permit FWP to undertake such management pursuant to the terms and conditions set forth below:

NOW, THEREFORE, in consideration of the mutual promises hereinafter set forth, Reclamation and FWP agree as follows:

1. TERM OF AGREEMENT.

The term of this Agreement shall commence on the date written above and continue for a period of twenty (20) years unless sooner terminated as described herein. There is no monetary compensation due to or from either party for this Agreement. Two (2) years prior to the expiration of this Agreement, FWP shall notify Reclamation in writing of its desire to either enter into a new Agreement for the next twenty (20) years, or to discontinue its management responsibilities upon expiration of this Agreement.

2. MISCELLANEOUS PROVISIONS.

Subject to the terms, conditions, limitations, exceptions, and reservations contained in this Agreement, FWP hereby accepts responsibility for all planning, development, construction, management, and operation and maintenance activities associated with the Fresno Wildlife Management Area. Such responsibilities also include the operation, maintenance, and replacement of any public recreation facilities.

A. FWP will, within the limits of its authority, adopt and enforce rules and regulations for public recreation use of the Fresno Wildlife Management Area as are necessary and desirable to protect the health and safety of persons using the area, for the preservation of law and order, and for the protection of resources and facilities. Said rules and regulations will, to the extent possible, be consistent with applicable Federal, State, and local laws, rules and regulations, Executive Orders, and Reclamation policies currently in place, or as may be adopted in the future.

B. Prior to any ground-disturbing or construction activities FWP shall coordinate with Reclamation on all site planning, construction, management, operation, and maintenance activities pursuant to this Agreement. Reclamation shall retain approval authority for all proposed projects and their associated engineering designs.

C. FWP shall manage the Fresno Wildlife Management Area consistent with authorized Project purposes of the Milk River Project.

D. FWP shall manage, operate, and maintain all public recreation facilities in good repair at its sole expense.

E. FWP shall manage, operate, and maintain all signs, boundary markers, posts, and any informational markers in good repair at its sole expense.

F. Any permits that are issued on Reclamation lands by FWP shall comply with Exhibit "B", entitled Reclamation Land Use Stipulation, which Exhibit is incorporated herein by reference and made a part hereof.

G. Upon receiving approval from Reclamation, FWP may construct, replace, add to, or alter public use facilities within the Fresno Wildlife Management Area. All work undertaken by FWP on Reclamation lands within the Fresno Wildlife Management Area shall be subject to the Environmental Requirements set forth in Exhibit "C" attached hereto and incorporated herein.

H. All applicable contracts issued by FWP, its contractors, or permittees relative to this Agreement for activities carried out within the Fresno Wildlife Management Area shall include the Equal Opportunity Requirements set forth in Exhibit "D" attached hereto and incorporated herein.

I. FWP agrees that it and its employees shall not discriminate because of race, color, age, religion, sex, or national origin against any person by refusing to furnish such person any accommodation, facility, service, or privilege offered to or enjoyed by the general public. FWP or its employees shall not publicize accommodations, facilities, services, or privileges in any manner that would directly or inferentially reflect upon or question the acceptability of the patronage of any person because of race, color, age, religion, sex, or national origin. FWP agrees to include and require compliance with a provision similar to the foregoing provision in any contract made with respect to the operations to be carried out hereunder.

J. This Agreement is subject to Title VI, Civil Rights Act of 1964 (78 Stat. 241) and Interior Regulations issued pursuant thereto in 43 CFR 17, as modified or amended, and set forth in Exhibit "E" attached hereto and incorporated herein.

3. RECLAMATION USE PARAMOUNT.

The rights of FWP under this Agreement are subordinate to the rights of Reclamation, its agents, employees, or assigns, relating to use of the Fresno Wildlife Management Area. Public use of the premises may be restricted whenever Reclamation determines that such restriction is necessary in the interest of Project purposes, operations, public or resource safety, or national security. Reclamation retains jurisdiction over the land and water areas not specifically addressed in this Agreement. Reclamation reserves the right of its officers, agents, and employees, at all times, to have unrestrictive access and ingress to, passage over, under, on, across, and egress from all Federal lands, to make investigations of all kinds, dig test pits and drill test holes, to survey for and construct reclamation and irrigation works and other structures incident to Federal Reclamation Projects, or for any purpose whatsoever.

4. ADJUSTMENT TO LAND AREAS SHOWN ON EXHIBIT A.

If future needs arise which Reclamation determines will require use of all or portions of the Fresno Wildlife Management Area, FWP shall be so notified by Reclamation. After the parties have consulted, Reclamation shall give full consideration to minimizing any resulting adverse effects relating to FWP's ability to manage the Fresno Wildlife Management Area. In the event Reclamation's need for all or portions of the Fresno

Wildlife Management Area makes it impractical for FWP to continue its management function, this Agreement will terminate as provided in Articles 19 and 20. Upon termination, FWP shall be solely responsible for bearing any of its costs associated with termination, including removal of improvements, loss of wages, revenues, salaries, or benefits to its employees, or for any other losses it may sustain as a result of the termination of this Agreement; provided, however, that termination of the Agreement by Reclamation pursuant to this Article 4 of the Agreement shall not be construed to obligate FWP to remove any dikes or other structural improvements on the landscape that were previously approved by Reclamation.

5. SOIL AND WATER CONSERVATION.

FWP shall take all reasonable measures necessary to minimize siltation and erosion; protect land and water resources; prevent and suppress wildfire; protect against the introduction and spreading of noxious weeds and other pests, including domestic or feral animals which are detrimental to natural resources, agriculture or public health and safety; and, shall cooperate in soil and water conservation, and fish and wildlife enhancement practices. FWP shall include suitable provisions for such controls in all licenses and permits issued, or contracts entered into by FWP with others. To the extent practicable, Reclamation and FWP will cooperate on water management issues to enhance fish and wildlife habitats within the Fresno Wildlife Management Area.

6. RESERVATIONS.

The privileges herein granted to FWP are subject to:

A. Existing and future rights-of-way in favor of the public or third parties for highways, roads, railroads, telephone, telegraph and electrical transmission lines, canals, laterals, ditches, flumes, siphons, and pipelines over, under, and across the land. Reclamation shall furnish to FWP, upon its request, a list of all existing land use authorizations within the Fresno Wildlife Management Area covered by this Agreement within thirty (30) days of such request.

B. The right of properly authorized officers, assignees, agents, employees, licensees, permittees, and lessees of Reclamation to enter upon the Fresno Wildlife Management Area without charge for the purpose of enforcing, protecting, and exercising the rights reserved to Reclamation and protecting the rights vested in those not party to this Agreement.

C. Reservations relative to construction material, mining, and the leasing of the mineral estate to third parties pursuant to Article 25, hereof.

7. LAND MANAGEMENT PLAN.

Within five years of execution of this Agreement, FWP shall submit, for Reclamation's review and approval, a Land Management Plan (Plan) describing the activities proposed by FWP for management of the Reclamation lands in the Fresno Wildlife Management Area. The Plan shall cover a five-year period, and shall include annual work plans for each year of the period.

FWP shall update the Plan every five years, and shall submit the update to Reclamation for review. If FWP is not proposing significant changes in the Plan, the five-year update may

simply be in the form of a letter from FWP to Reclamation, indicating that the existing Plan remains valid for the subsequent five-year period, and including a description of any additional or revised on-the-ground activities to be undertaken by FWP during the new five-year period.

The parties understand and agree that additional opportunities or needs for management activities may arise during the term of an approved Plan. In such cases, these additional management activities shall be submitted by FWP for review by Reclamation on a case-by-case basis. Upon approval by Reclamation, the written description of the approved activity shall be considered to be an addition to the Plan and shall be appended thereto.

Emergency maintenance, such as repair of vandalism, will occur on an as needed basis.

Reclamation reserves the right to approve or disapprove any actions identified in the Plan. Upon completion of an approved Plan, this Agreement shall be subject to the provisions contained therein. FWP will notify Reclamation if annual plans vary significantly from the approved Land Management Plan.

8. THIRD PARTY CONTRACTS AND PERMITS.

A. FWP may enter into basic service contracts without prior review and written approval of Reclamation. Such contracts may include, but not necessarily be limited to, services for normal management, operations, and maintenance of the area, including, but not limited to, trash removal and disposal, toilet pumping, etc. FWP may also enter into contracts, without prior review and written approval, for services to accomplish wildlife management objectives. These services will be consistent with management objectives and can include, but are not limited to, livestock grazing and farming.

B. All third party contracts and permits issued by FWP will be subject to applicable Federal laws and regulations, Reclamation policy, Executive orders, directives and standards, and applicable terms of this agreement. The term of such contracts shall not extend beyond the term of this agreement. Said contracts will also provide that in the event of the termination of this agreement, Reclamation may determine to stand in the stead of FWP as grantor for the remainder of the term of said contract; provided however, in the event of such termination, Reclamation may, at any time thereafter, terminate said contract by giving the contractor or permittee ninety (90) calendar days written notice thereof.

C. No contracts or permits entered into or granted by FWP shall purport to transfer or convey any interest in the land or any public facilities, the right given to FWP to enter into such contracts and permits shall not be construed as a right to grant or convey any interest in land. Such contracts and permits include, but are not limited to easements, leases, and other documents that may transfer Federal interest.

D. FWP shall not issue, or allow to be issued, directly or through the actions of its permittees, permits or other forms of agreements that allow for the development of privately-owned exclusive uses such as cabin sites, mobile home or travel trailer sites, private boat docks, or private road access.

E. Reclamation reserves the right and is responsible for the issuance of outgrants for land use (special use permits, licenses, crossing agreements, etc.) and resource management within the Federal Estate. Reclamation will, prior to approval, provide FWP a copy of any outgrant application for review and comment. FWP shall review any such application and make written comment to Reclamation's designated representative within 45 calendar days from receipt. Reclamation's designated representative will consider the written comments of FWP during the approval process. Comments received will be considered and, if applicable, incorporated into any outgrant. Outgrants shall contain reasonable measures to protect public recreation facilities, and reclaim or repair damages, which may occur to public recreation facilities.

9. FEES AND CHARGES.

FWP shall not charge user fees for public access to the Milk River Management Areas, but FWP has full authority to require members of the public to possess appropriate licenses for hunting, fishing, trapping, boating and other activities regulated by FWP. FWP may charge grazing lease fees, in the event FWP desires to allow for livestock grazing on Reclamation lands within the Milk River Management Areas. Any such proposed third-party grazing activities shall be part of an approved Land Management Plan.

10. VISITOR USE

FWP will furnish to Reclamation's representative, upon request, a summary of the recreation related use and/or resources on the Fresno Wildlife Management Area for the previous calendar year.

11. EXAMINATION OF RECORDS.

The Comptroller General of the United States or any duly authorized representatives, or the Secretary of the Interior or duly authorized representatives shall have access to and the right to examine any pertinent books, documents, papers, and records of FWP involving transactions related to this Agreement.

12. FACILITY DEVELOPMENT.

A. It is the intent of Reclamation and FWP to develop and enhance the natural resources and public recreation opportunities within the Fresno Wildlife Management Area. Site planning, public recreation facility construction and resource enhancement shall be accomplished on a mutually agreeable, incremental basis as user demands require and/or as fund availability permits. All development shall be in accordance with approved planning documents and the Fresno Wildlife Management Area land management plan, as described under Article 7.

B. New developments or improvements may include water and irrigation systems, green belts, hiking paths, camping and day-use areas, roads and parking areas, the planting of trees or wildlife food plots, dredging of bays, the installation of boat docks, signage, etc.

C. FWP shall be responsible for developing site plans, detailed drawings, and construction specifications for all public recreation facilities or improvements to be constructed on Reclamation lands under this Agreement and shall submit them to Reclamation for review and written approval prior to construction. Said site plans shall be prepared in sufficient detail to show facility location and to permit an analysis of the development. Reclamation

shall use due diligence in processing, checking, and approving plans and specifications submitted by FWP. Any approval, disapproval, or requirements for modification of said plans and specifications by Reclamation shall be transmitted to FWP in writing within sixty (60) days of receipt. In the event FWP does not receive any change orders within sixty (60) days, said plans shall be deemed approved. FWP may, during the course of this Agreement, contract with a third party to assume FWP's planning responsibilities as noted above. Any plans, detailed drawings, and construction specifications developed by the third party shall be submitted in the same manner as if FWP had performed the work.

D. See Exhibit C for environmental requirements in relation to facility development.

13. LIABILITY OF CONTRACTORS AND PERMITTEES.

A. FWP shall require all contractors and permittees to carry such insurance as is customary among prudent operators of similar businesses under comparable circumstances. FWP will furnish to Reclamation's representative, upon request, proof of insurance records.

B. FWP shall require all contractors and permittees to assume full responsibility for any and all liability arising out of, or connected with contractor or permittee activities on Federal lands, and FWP shall require contractors and permittees to agree to indemnify and hold harmless Reclamation, its officers, agents, and employees, from any and all such liability.

14. TITLE TO LAND, IMPROVEMENTS, AND RESTORATION.

A. Upon commencement of this Agreement, FWP shall keep a current and accurate inventory of such structures and improvements (including construction and/or purchase costs) within the Fresno Wildlife Management Area that, during the term of this agreement, were installed or constructed solely at its own expense, or by a contractor, and as may be requested by Reclamation, and FWP shall provide Reclamation an inventory of such structures and improvements.

B. For a period of one hundred-twenty (120) days after termination of this Agreement, or such longer period as may be determined by Reclamation, FWP shall have the privilege of selling, salvaging, and/or removing those structures or facilities installed or constructed by FWP at its sole costs or expense, exclusive of those structures or facilities paid for or partially paid for from funds expended by Reclamation. After the expiration of such period, title to all remaining such FWP-financed structures or facilities shall automatically vest in the United States and be under the jurisdiction of Reclamation. The right of FWP to remove such structures or facilities shall include the obligation of FWP to restore the land occupied by such structures to its original condition as determined to be satisfactory to Reclamation.

15. REVIEW OF ADMINISTRATION.

A. Reclamation may make inspections of the Fresno Wildlife Management Area at any time. However, Reclamation shall provide FWP a five (5) day advance notice of its intentions in order to include FWP in such inspections.

B. The parties hereto will meet as needed, when requested by either, to review and inspect the management, operation and maintenance of the Fresno Wildlife Management Area. The

purpose of these reviews and inspections is to ensure that management, operation, and maintenance procedures are adequate and consistent with the purposes of this Agreement and to identify and correct deficiencies and problems. Said reviews will include, but are not necessarily limited to: health and safety; appropriate use of Federal land, land interests and resources; and inspections of facilities and operations, including third party or commercial permits, and basic service contracts. FWP agrees to correct all deficiencies within specified time requirements established by Reclamation.

16. DEBRIS AND WASTE REMOVAL.

FWP shall provide litter control and trash removal on Reclamation lands of the Fresno Wildlife Management Area to the satisfaction of Reclamation and to the extent necessary to maintain the area in a safe condition suitable for public recreation use. FWP shall properly dispose of all waste, discarded or abandoned items, and debris generated by its management, and operation and maintenance activities. Said waste, debris, etc. shall be disposed of or recycled in a properly permitted disposal or recycling facility outside of the Project boundaries.

17. SAFETY AND UNAUTHORIZED USE.

A. FWP shall, within the limits of its statutory authority, adopt and enforce rules and regulations for recreational use of the Fresno Wildlife Management Area as are necessary and appropriate to protect the health and safety of the recreating public; for the preservation of law and order; and, for the protection of the Fresno Wildlife Management Area resources and facilities. Said rules and regulations shall, to the extent possible, be consistent with applicable Federal and state laws, regulations, and policies currently in place or as may be adopted in the future.

B. The primary responsibility for identifying and preventing unauthorized uses or encroachment within the Fresno Wildlife Management Area belongs to FWP. FWP shall, in cooperation with Reclamation, take all reasonable measures necessary to identify, investigate, and resolve incidents of unauthorized use or encroachment. These measures include any legal actions necessary to prevent or prosecute such unauthorized use. Reclamation hereby assigns to FWP the right to bring action in FWP's name in order to protect each party's interests and carry out their responsibilities in connection therewith. Resolution of boundary disputes shall be the responsibility of Reclamation. FWP shall notify Reclamation's designated representative of boundary disputes or unauthorized incidents immediately upon discovery.

C. Reclamation shall authorize FWP, and FWP shall enforce, provisions found in FWP Regulation Chapter 23, Regulation Governing Uses of Land and Waters Acquired or Administered by FWP.

18. TERMINATION.

This Agreement shall terminate and all rights of FWP hereunder shall cease:

A. At the expiration of this Agreement.

B. FWP may terminate its obligations under this Agreement by giving Reclamation one (1) year advance written notice. If the Agreement is terminated as the result of such written

notice, all rights and obligations of FWP under this Agreement shall cease at the end of said period, and FWP shall immediately return all management control to Reclamation.

i. In the event that FWP fails to provide Reclamation one (1) year notice, by fax, email or letter, Reclamation shall take over administration of Reclamation lands within the Fresno Wildlife Management Area, and FWP shall reimburse Reclamation for administrative costs incurred during a six (6) month transition period, not to exceed $3,000.

C. As may be provided for in Article 4.

19. DEFAULT.

If Reclamation finds that FWP has violated any portion of this Agreement, Reclamation shall:

A. Provide written notice of the violation to FWP and such opportunity to cure as is appropriate. Generally, FWP shall be afforded not more than sixty (60) days after receipt of written notice to cure the violation. In the event a violation constitutes a clear and present danger to the public's health, safety and welfare, Reclamation shall immediately notify FWP, in the most expeditious manner possible, of such violation and such opportunity to cure the danger as is warranted by the violation. Subsequent written notice of the violation shall also be sent to FWP. In the case of a violation constituting a clear and present danger to the public's health, safety and welfare, Reclamation may, at its sole discretion, elect to immediately cure the violation. In such case, Reclamation shall bill FWP for all costs, not to exceed $5,000, for curing the violation.

B. If FWP has not cured the violation by the end of the period identified pursuant to Article 19.A., Reclamation shall notify FWP that it is in default of the terms of this Agreement, and that if the violation is not cured within thirty (30) calendar days from the date of default notice, the Agreement, either in whole or in part, shall be terminated for cause. If FWP fails to meet such requirement by the end of the thirty (30) day period, the Agreement, either in whole or in part, shall be terminated and FWP shall immediately vacate or remove any and all personal property. If Reclamation makes a determination that said personal property is necessary for the future operation of the Fresno Wildlife Management Area, Reclamation shall have the right to purchase from FWP said personal property at its fair market value.

20. ACCIDENT REPORTING.

FWP shall investigate, within its statutory authority, cooperate in the investigation by the agency having jurisdiction, all accidents involving death, serious injury or property damage, hazardous material spills, or other incidents of a serious nature within the Fresno Wildlife Management Area, and shall take immediate steps to control the incident, if possible, and notify Reclamation in accordance with Article 28.A. FWP shall make an initial verbal report on the accident to Reclamation's Montana Area Office within five working days of knowledge of the incident. For all accidents or incidents, FWP shall, within its statutory authority and within five calendar days of the verbal notice, provide Reclamation copies of written reports describing the nature of the death, spill, injury or damage, the date of occurrence, the cause if known, and if appropriate, the estimated costs of repair, and the estimated date of repair. Hazardous material spills shall be

reported to the appropriate agencies as required by Federal, State and local laws, rules and regulations as well as to Reclamation.

21. VARIATION IN RESERVOIR WATER LEVEL.

Reclamation reserves the right to vary the reservoir water level as necessary for Project purposes. Reclamation shall, to the extent reasonably practicable, provide timely notice to FWP of any special or emergency increases or decreases in water level that would adversely affect public recreation facilities and public use of the Fresno Wildlife Management Area. FWP agrees that Reclamation shall not be held responsible to FWP for losses or damages, either financial (lost revenues, incomes, profits, etc.) or to fixed assets (docks, boat launch ramps, buoys, buildings, materials, etc.), incurred during the construction, operation, or maintenance of the Project. Reclamation's monthly operating plans are available by FWP request.

22. CONSUMPTIVE USE OF WATER BY THE FWP.

A. FWP may, subject to Montana water law and water availability, use water from reservoir supplies, as has been acquired or retained for the operation of public recreation facilities and for livestock watering within the Fresno Wildlife Management Area.

B. When FWP furnishes water to the public, it shall furnish only potable drinking water which meets appropriate Federal, State, and local health standards. Reclamation does not warrant the quality of reservoir water as to its suitability either for domestic purposes or for human consumption. FWP shall not issue water contracts, or water rights, to any person, corporation, company, entity, or facility to extract water from any Reclamation lands within the Fresno Wildlife Management Area.

23. CERTIFICATION OF NONSEGREGATED FACILITIES.

FWP certifies that it does not maintain or provide for its employees any segregated facilities at any of its establishments, and does not permit its employees to perform their services at any location under its control where segregated facilities are maintained. FWP certifies further that it shall not maintain or provide for its employees any segregated facilities at any of its establishments, and that it shall not permit its employees to perform their services at any location under its control where segregated facilities are maintained. FWP agrees that a breach of this certification is a violation of the Equal Opportunity Clause in this Agreement. As used in this certification, the term "segregated facilities" means any waiting rooms, work areas, restrooms and washrooms, restaurants and other eating areas, time clocks, locker rooms, and other storage or dressing areas, parking lots, drinking fountains, public recreation and entertainment areas, transportation, and housing facilities provided for employees which are segregated by explicit directive or are, in fact, segregated on the basis of race, creed, color, or national origin, because of habit, local custom, or otherwise. FWP agrees that (except where it has obtained identical certification from proposed subcontractors for specific time periods) it shall obtain identical certification from proposed subcontractors prior to the award of subcontracts exceeding $10,000 which are not exempt from the provisions of the Equal Opportunity Clause, and that it shall retain such certification in its files.

NOTE: The penalty for making false statements in offers is prescribed in 17 U.S.C. 1001.

24. CONSTRUCTION MATERIALS AND MINING.

There is reserved to Reclamation the right to remove from the Fresno Wildlife Management Area materials necessary for construction, operation, and maintenance of the Project works and facilities, the right to prospect for, extract, and carry on the development for oil, gas, coal, and other minerals, and the right to issue leases or permits to prospect for oil, gas, or other minerals on said lands under the Act of February 25, 1920 (41 Stat. 437), and acts amendatory thereof or supplementary thereto, and the Act of August 7, 1947 (61 Stat. 913). FWP shall be consulted and Reclamation shall give full consideration to the FWP's interest concerning any proposal prior to the exercise of these rights within the Fresno Wildlife Management Area.

25. RISK - DAMAGES.

A. Reclamation and FWP will each be responsible and liable for the negligent acts or omissions of their respective officers, agents, employees, or assigns to the extent provided by law. Nothing in this Agreement will be construed as admission of fault or liability, and nothing will limit the defenses and immunities legally available to each party. Neither FWP nor the State of Montana waives sovereign immunity by entering into this Agreement and specifically retain immunity and all defenses available to them as sovereigns pursuant to State laws.

B. Within thirty (30) days of receipt by either party of any claim for liability arising from actions within the scope of this Agreement, the party receiving the claim shall notify the other party of such claim and provide a copy of the claim to the other party, if it is in written form. Nothing in this Article shall be construed to limit the right of either party to assert such affirmative defenses and file such cross complaints as may be appropriate in relation to any claim affecting the liability of such party.

26. PROTECTION OF RESOURCES.

A. Environmental Protection

i. FWP shall comply with the provisions of all applicable Federal, State and local laws and regulations, and Reclamation policies and instructions, pertaining to the protection of the public, employees, natural and cultural resources within the area of operation.

B. Hazardous Materials/Waste Management

i. FWP may not allow contamination or pollution of Federal lands, waters or facilities for which FWP has the responsibility for care, operation, and maintenance by its employees or agents and shall take reasonable precautions to prevent such contamination or pollution by third parties. Substances causing contamination or pollution shall include but are not limited to hazardous materials, thermal pollution, refuse, garbage, sewage effluent, industrial waste, petroleum products, mine tailings, mineral salts, misused pesticides, pesticide containers, or any other pollutants.

ii. FWP shall comply with all applicable Federal, State, and local laws and regulations, and Reclamation policies and directives and standards, existing or hereafter enacted or promulgated, concerning any hazardous material that shall be used, produced, transported, or stored on or in Federal lands, waters or facilities.

iii. "Hazardous material" means any substance, pollutant, or contaminant listed as hazardous under the Comprehensive Environmental Response, Compensation, and Liability Act of 1980, as amended, 42 U.S.C. section 9601, et seq., and the regulations promulgated pursuant to that Act.

iv. Upon discovery of any event which may or does result in contamination or pollution of Federal lands, waters or facilities, FWP shall initiate any necessary emergency measures to protect health, safety and the environment and shall report to Reclamation within twenty-four (24) hours of such discovery the full details of the event and actions taken.

v. Violation of any of the provisions of this sub-Article, as determined by Reclamation, may constitute grounds for termination of this Agreement. Such violations require immediate corrective action by FWP and shall make FWP liable for the cost of full and complete remediation and/or restoration of any Federal resources or facilities that are adversely affected as a result of the violation.

vi. FWP agrees to include the provisions contained in paragraphs i.-v. of this sub-Article in any subcontract, third-party contract, or permit they may issue pursuant to this Agreement if the contractor or permittee will be using or handling any hazardous materials.

vii. Reclamation agrees to provide information necessary for FWP, using reasonable diligence, to comply with the provisions of this sub-Article.

C. Weed Control

i. All herbicides shall be used in accordance with the current registration, label direction, or other directives regulating their use and with applicable Reclamation policy and directives and standards. Applicators will meet applicable State training or licensing requirements. Records maintenance shall be in accordance with applicable State requirements and such records shall be furnished to Reclamation as per State requirements, if any, or on request by Reclamation.

ii. Any equipment, tools, and machines used for herbicide application shall be in good repair and suitable for such use. Equipment shall be calibrated prior to the spraying season.

iii. Mixing, disposal, and cleaning shall be done where herbicide residues cannot enter storm drains, sewers, or other non-target areas.

iv. FWP shall initiate any necessary measures for containment and clean up of herbicide spills. Spills shall be reported to Reclamation as per state requirements, if any.

v. Aerial application of herbicide is allowed with prior notification to Reclamation.

vi. FWP agrees to include the provisions contained in paragraphs i-vi of the sub-Article in any contract for herbicide application on Reclamation property at Fresno Reservoir.

D. Pest Control

i. FWP shall not permit the use of any pesticides on Federal lands without prior written approval by Reclamation. FWP shall submit to Reclamation for

approval an Integrated Pest Management Plan for the prescribed area at least thirty (30) days in advance of pesticide application.

ii. All pesticides shall be used in accordance with the current registration, label direction, or other directives regulating their use and with applicable Reclamation policy and directives and standards. Applicators will meet applicable State training or licensing requirements. Records maintenance shall be in accordance with applicable State requirements and such records shall be furnished to Reclamation on a yearly basis prior to the spraying season.

iii. Any equipment, tools, and machines used for pesticide application shall be in good repair and suitable for such use. Equipment shall be calibrated prior to the spraying season and as deemed necessary by Reclamation.

iv. Mixing, disposal, and cleaning shall be done where pesticide residues cannot enter storm drains, sewers, or other non-target areas.

v. FWP shall initiate any necessary measures for containment and clean up of pesticide spills. Spills shall be reported to Reclamation within twenty-four (24) hours with full details of the actions taken.

vi. Aerial application of pesticides is prohibited without prior written approval by Reclamation.

vii. FWP agrees to include the provisions contained in paragraphs i.-vi. of this sub-Article in any contract for pesticide application on Reclamation property at Fresno Reservoir.

E. Historic, Cultural and Archaeological Values

i. FWP shall take reasonable and necessary precautions to protect and preserve any and all antiquities or other objects of archaeological, paleontological, cultural, historic, or scientific interests on Federal lands. Objects under consideration include but are not limited to, historic or prehistoric ruins, human remains, funerary objects, and other artifacts. Should such sites or objects, or evidence of sites or objects, be discovered FWP shall immediately suspend any and all work involving the area in question, make a reasonable effort to protect such discovery, and advise Reclamation of the existence of such discovery. FWP shall immediately provide an oral notification to Reclamation of the discovery of human remains on Reclamation lands. FWP shall forward a written report of their findings to Reclamation within forty-eight (48) hours by certified mail. FWP shall cease activity, stabilize, and protect such discoveries until authorized to proceed by Reclamation. Protective and mitigation measures specified by Reclamation shall be the responsibility of FWP. Reclamation shall have the area inspected within ten (10) working days to determine its historical significance and the appropriate actions to follow (salvage, test excavation, etc., and resumption of construction). Cost of any salvage work will be borne by the Reclamation. All objects salvaged from Federal lands are the property of the United States Government and will be turned over to Reclamation for disposition.

27. NOTICES.

A. Any notice, demand, or request required or authorized by this Agreement to be given or made to or upon Reclamation shall be deemed properly given or made if delivered by mail, to the Area Manager, Montana Area Office, P.O. Box 30137 Billings, MT. 59107.

B. Any notice, demand, or request required or authorized by this Agreement to be given or made to or upon FWP shall be properly given or made if delivered by mail, to the Montana Fish, Wildlife and Parks : Attn: Wildlife Program Manager, 54078 Hwy 2 West, Glasgow, MT 59230.

C. The designation of the person to or upon who any notice, demand, or request is to be given or made, or the address of any such person, may be changed at any time by notice given in the same manner as provided in this section for other notices.

28. CONTINGENT ON APPROPRIATION OR ALLOTMENT OF FUNDS.

The expenditure of any funds and the performance of any work by Reclamation or by FWP as provided for by the terms of this Agreement, which may require an appropriation by the respective legislative bodies, or the allotment of funds, shall be contingent upon such appropriation or allotment being made. The failure of either of such legislative bodies to appropriate funds or the absence of any allotment of funds shall not impose any liability on either of the parties hereto.

29. MODIFICATION OF AGREEMENT.

A. This Agreement may be modified, amended, or superseded at any time during its term upon mutual written agreement by the parties hereto.

B. If any portion of this Agreement is rendered null and void as a result of applicable laws, regulations, Executive Orders, Reclamation Policy, court rulings, etc., all remaining portions of the Agreement will remain in full force and effect, provided the voided portion or portions do not affect the primary purposes of this Agreement.

30. OFFICIALS OR EMPLOYEES NOT TO BENEFIT.

No member or delegate to Congress or Commissioner, and no officer, agent, or employee of the Department of the Interior, or official or employee of FWP shall be admitted to any share or part of this Agreement.

IN WITNESS WHEREOF, the parties hereto have executed this Agreement as of the date first above written.

U.S. Department of the Interior
Bureau of Reclamation
Montana Area Office

Brent C Esplin, Area Manager
Bureau of Reclamation

State of Montana
Montana Fish, Wildlife and Parks

M. Jeff Hagener, Director
Montana Fish, Wildlife and Parks

MAP OF FRESNO WMA

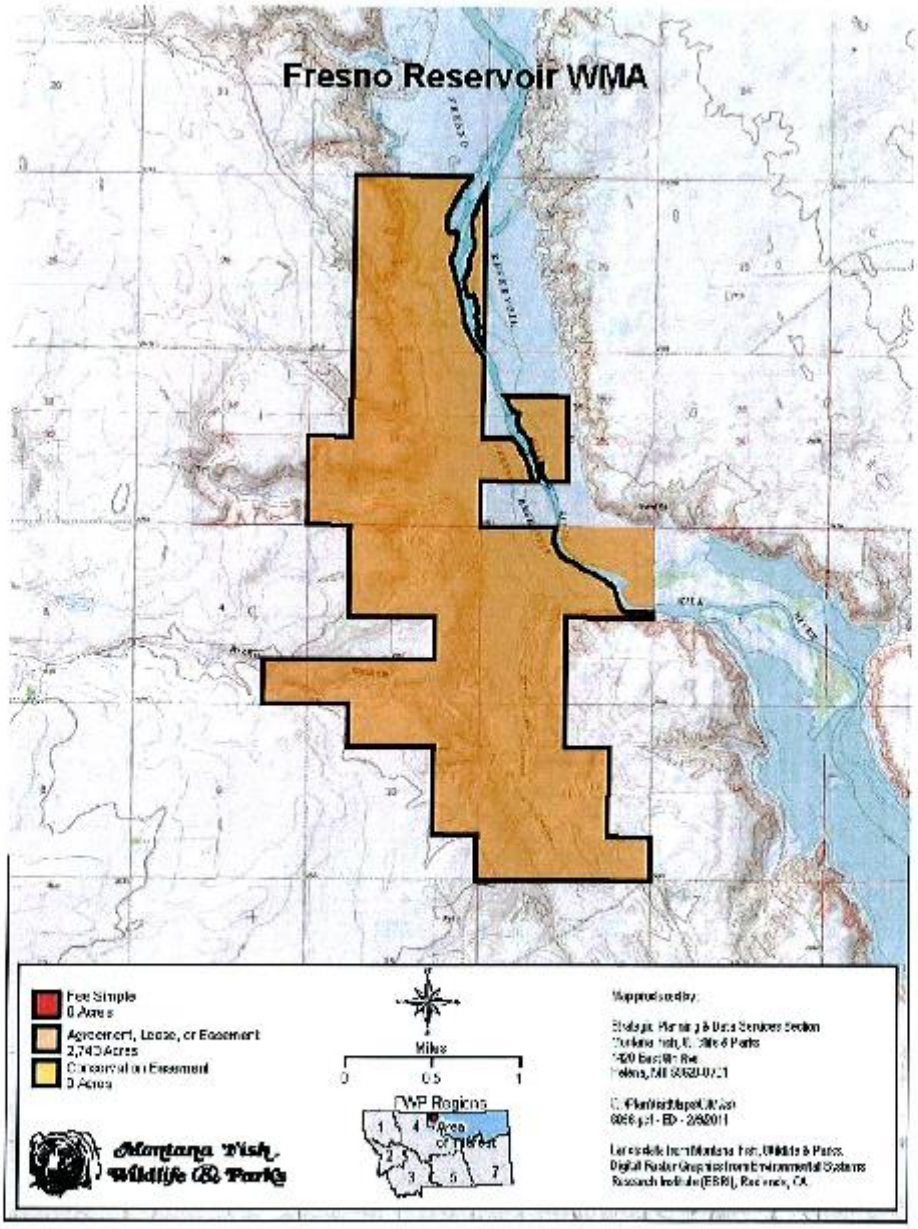

15

EXHIBIT B

RECLAMATION LAND-USE STIPULATION

A. There is reserved to Reclamation, its successors or assigns, the prior right to use any of the lands herein described to construct, operate, and maintain all structures and facilities including, but not limited to, canals, waste ways, laterals, ditches, roadways, electrical transmission lines, dams, dikes, reservoirs, pipelines, telephone and telegraph lines, communication structures generally, substations, switch yards, powerplants and any other appurtenant irrigation and power structures and facilities, without any payment made by the Bureau of Reclamation or its successors for such right.

B. FWP further agrees that if the construction of any or all of such structures and facilities across, over or upon said lands should be made more expensive by reason of the existence of improvements or works of FWP thereon, such additional expense is to be estimated by the Secretary of the Interior, whose estimate is to be final and binding upon the parties hereto. Within 30 days after demand is made upon FWP for payment of any such sums, FWP will make payment thereof to Reclamation or any of its successors or assigns constructing such structures and facilities across, over, or upon said lands. As an alternative to payment, and if approved by Reclamation, FWP, at its sole cost and expense and within time limits established by the Government, may remove or adapt facilities constructed and operated by it on said lands to accommodate the aforementioned structures and facilities of Reclamation.

C. FWP shall bear the cost to the Government of any costs occasioned by the failure FWP to remove or adapt its facilities within the time limits specified.

D. There is also reserved to Reclamation the right of its officers, agents, and employees, at all proper times and places freely to have ingress to, passage over, and egress from all of said lands for the purpose of exercising, enforcing, and protecting the rights reserved herein.

E. FWP further agrees that Reclamation, its officer, agents, and employees and its successors and assigns shall not be held liable for any damage to FWP's improvements or works by reason of the exercise of the rights here reserved; nor shall anything contained in this paragraph be construed as in any manner limiting other reservations in favor of Reclamation contained in this Agreement.

EXHIBIT C

ENVIRONMENTAL REQUIREMENTS

A. No artificial modification of the environment shall be undertaken without prior approval of the Reclamation in writing. In approving such artificial modification, Reclamation may require FWP to provide an Environmental Assessment which it will use to determine the actions necessary to meet the requirements of the National Environment Policy Act.

B. FWP shall plan, construct, operate, maintain, and manage all structures and facilities on the premises herein described so as to minimize adverse environmental consequences. In so doing FWP shall give particular consideration to alleviating potentially harmful effects on, but not limited to, landscape, soils, water, air, mineral, timber, or population or other animate resources

C. FWP shall correct or modify any pollution of soil, air, or water and deterioration of living or inanimate resources caused by or resulting from exercise of the privileges granted herein in accordance with rules, regulations, and directives of the Secretary of the Interior, including, but not limited to, aesthetic qualities of the environment, and in compliance with all Federal laws. Increased cost will not justify noncompliance with environmental quality controls required by Reclamation.

D. FWP shall comply fully with all applicable Federal laws, orders, and regulations and the laws of the State of Montana, all as administered by appropriate authorities, concerning the pollution of streams, reservoirs, ground water, or water courses with respect to thermal pollution or the discharge of refuse, garbage, sewage effluent, industrial waste, oil, mine tailings, mineral salts, or other pollutants, and concerning the pollution of the air with respect to radioactive materials or other pollutants.

E. In planning for projects, FWP shall allow enough time for the Montana Area Office (MTAO) to comply with cultural resources laws, regulations, guidelines and policies. MTAO will be the lead Federal agency for compliance with these requirements. FWP shall furnish all necessary data to MTAO for this compliance. Any cultural resources surveys or research which may be required as part of data submittals shall be performed by persons or institutions holding valid permits from Reclamation to conduct such work. The cost of any required cultural resource investigations shall be borne by FWP. Forty five (45) to sixty (60) days is the amount of time required for Reclamation to comply with cultural resource laws and regulations. The forty five (45) to sixty (60) days start once all the necessary plans have been submitted to MTAO. Work must not start to modify existing, or build new facilities until the appropriate cultural resource compliance is completed by MTAO and FWP is notified as such.

EXHIBIT D

EQUAL OPPORTUNITY REQUIREMENTS

During the performance of this contract, FWP agrees as follows:

A. FWP will not discriminate against any employee or applicant for employment because of race, color, age, religion, sex, or national origin. FWP will take affirmative action to ensure that applicants are employed, and that employees are treated during employment, without regard to their race, color, age, religion, sex, or national origin. Such action shall include, but not be limited to, the following: Employment, upgrading, demotion, or transfer; recruitment or recruitment advertising; layoff or termination; rates of pay or other forms of compensation; and selection for training, including apprenticeship. FWP agrees to post in conspicuous places, available to employees and applicants for employment, notices to be provided by the Reclamation setting forth the provisions of this Equal Opportunity clause.

B. FWP will, in all solicitations or advertisements for employees placed by or on behalf of FWP, state that all qualified applicants will receive consideration for employment without regard to race, color, age, religion, sex, or national origin.

C. FWP will send to each labor union or representative of workers with which it has a collective bargaining Agreement or other contract or understanding, a notice to be provided by Reclamation, advising the labor union or worker's representative of FWP's commitments under this Equal Opportunity clause, and shall post copies of the notice in conspicuous places available to employees and applicants for employment.

D. FWP will comply with all provisions of Executive Order No. 11246 of September 24, 1965, as amended, and of the rules, regulations, and relevant orders of the Secretary of Labor.

E. FWP will furnish all information and reports required by said amended Executive Order and by the rules, regulations, and orders of the Secretary of Labor, or pursuant thereto, and will permit access to its books, records, and accounts by Reclamation and the Secretary of Labor for purposes of investigation to ascertain compliance with such rules, regulations, and orders.

F. In the event of FWP noncompliance with the Equal Opportunity clause of this contract or with any of the said rules, regulations, or orders, this contract may be canceled, terminated, or suspended, in whole or in part, and FWP may be declared ineligible for further Government contracts in accordance with procedures authorized in said amended Executive Order, and such other sanctions may be imposed and remedies invoked as provided in said Executive Order, or by rules, regulation, or order of the Secretary of Labor, or as otherwise provided by law.

G. FWP will include the provisions of paragraphs A.-F. in every subcontract or purchase order unless exempted by rules, regulations, or orders of the Secretary of Labor issued pursuant to Section 204 of said amended Executive Order, so that such provisions will be

binding upon each sub-contractor or vendor. FWP will take such action with respect to any subcontract or purchase order as Reclamation may direct as a means of enforcing such provisions, including sanctions for noncompliance: Provided, that in the event FWP becomes involved in, or is threatened with, litigation with a sub-contractor or vendor as a result of such direction by Reclamation, FWP may request Reclamation to enter into such litigation to protect the interests of Reclamation.

EXHIBIT E

TITLE VI, CIVIL RIGHTS ACT OF 1964

A. FWP agrees that it will comply with Title VI of the Civil Rights Act of July 2, 1964 (78 Stat. 241), and all requirements imposed by or pursuant to Department of the Interior regulation (43 CFR 17) issued pursuant to that title, to the end that, in accordance with Title VI of that Act and the regulation, no person in Reclamation shall, on the ground of race, color, sex, or national origin be excluded from participation in, be denied the benefits of, or be otherwise subjected to discrimination under any program or activity for which FWP receives financial assistance from Reclamation and hereby gives assurance that it will immediately take any measures to effectuate this Agreement.

B. If any real property or structure thereon is provided or improved with the aid of Federal financial assistance extended to FWP by Reclamation, this assurance obligates FWP, or in the case of any transfer of such property, any transferee for the period during which the real property or structure is used for a purpose involving the provision of similar services or benefits. If any personal property is so provided, this assurance obligates FWP for the period during which it retains ownership or possession of the property. In all other cases, this assurance obligates FWP for the period during which the Federal financial assistance is extended to it by Reclamation.

C. This assurance is given in consideration of and for the purpose of obtaining any and all Federal grants, loans, contracts, property, discounts, or other Federal financial assistance extended after the date hereof to FWP by Reclamation, including installment payments after such date on account of arrangements for Federal financial assistance which was approved before such date. FWP recognizes and agrees that such Federal financial assistance will be extended in reliance on the representations and Agreements made in this assurance, and that the Reclamation shall reserve the right to seek judicial enforcement of this assurance. This assurance is binding on FWP, its successors, transferees, and assignees.

EXHIBIT F

SUMMARY OF REPORTING REQUIREMENTS

Submittals from FWP are required during the term of the contract. Required submittals are as follows:

RSN	*Clause Or Section Title*	*Submittals Required*	*Due date or delivery time*
1	Land Management Plan	Written plan proposing plans and activities for the term of the agreement	Within 5 years of execution of agreement
2	Recreation Use Data Report	Report consisting of any information collected by the Department on public recreational use	Upon Reclamation's request
3	Accident Reporting	Copies of written reports describing the incident after verbal notice	Within 5 calendar days of incident
4	Weed Control	Records as per State regulations. Any spills that occur	Upon Reclamation's request and/or per State requirements
5	Pest Control	Prior approval needed. Records as per State regulations. Any spills that occur	Upon Reclamation's request and/or per State requirements
6	Historic, Cultural, and Archaeological Values	Written report of findings after verbal notice	Within 48 hours of finding

APPENDIX C – Infrastructure

MT-031

FRESNO WMA

MONTANA

DUCKS UNLIMITED

A Waterfowl Habitat Project

Developed By

Ducks Unlimited, Inc.

In Cooperation With The

Montana Department of Fish, Wildlife and Parks

COMPLETED PROJECT REPORT

Fresno WMA

Location: Township 34N; Range 12E; Sections 2,3 & 11; Hill County, MT. Eleven miles NW of Kremlin, 30 miles NW of Havre and 50 miles NE of Chester.

Access: From Kremlin travel W on Highway #2 for 3 1/2 miles. Turn N onto a gravelled county road and proceed for 3/4 mile whereupon you will cross Burlington Northern Railroad tracks. Continue N for another 9 1/4 miles then turn E onto a very primitive two-wheel vehicle trail (section-line road) and proceed for 1 mile until you see a gate. There is a Wildlife Management Area (WMA) sign posted on the gate. Proceed through the gate and follow the trail in a NE direction for another 1 1/2 miles. It will lead you to the top of a hill overlooking the project site. A Ducks Unlimited Inc. (DU) sign designates the project area. Park vehicle and proceed by foot to the embankment, water level control structure and level ditches.

Ownership & Management: All land is owned by the U.S. Government and managed by the Montana Department of Fish, Wildlife and Parks (MTFWP).

Size:

Uplands	2500 acres
Wetlands	500 acres
Total Management Unit	3000 acres

History & Description: Fresno WMA is located in extreme north central Montana in prairie pothole country. The topography is relatively flat with some scattered breaks or coulees. The WMA lies adjacent to the Milk River and is part of the Chain of Lakes drainage. The soil is sandy but compact and is able to retain water when available. The major source of water on the WMA is supplied from run-off and spring overflow of the Milk River. It has been dry from 1981-1986 during these low run-off years.

The U.S. Government owns the land and in the early 1970's the Bureau of Reclamation (BOR) signed a long term lease/management agreement with the MTFWP creating a 3,000-acre WMA. An earthen embankment with a fixed level culvert was constructed in 1975 to impound overflow from the Milk River and Fresno Reservoir. Though the structure was still in working order, it did not adequately impound enough water to sustain a wetland ecosystem.

In 1986, the MTFWP submitted a proposal to DU to; construct a large earthen embankment with a variable level water control structure, improve the existing structure and excavate level ditches and a water diversion channel.

Upland Vegetation: The uplands on the WMA are dominated by native short-grass prairie grass species that include western wheatgrass, blue grama and needle and thread grass. Abundant amounts of silver sage and some snowberry are found. Livestock grazing occurs along the flood plain of the Milk River. Only trespass grazing occurs on the uplands. The only trees and woody shrubs found on the WMA are in the flood plain and consist mostly of willow, Russian olive, buffalo berry and wild prairie rose. Small grains, wheat and barley, are farmed on lands adjacent to the WMA.

Aquatic Vegetation: Prior to project construction scattered stands of bulrush with some cattail were found on the WMA. Smartweed and spikerush are expected to become established once water is impounded.

Some sago pondweed, a submergent species and duckweed, a floating aquatic, currently occur in wet areas. Coontail and water milfoil should become established after the impoundment fills with water.

Limiting Factors: The major factors limiting waterfowl production on Fresno WMA were the lack of secure, reliable brood-rearing habitat and lack of water level management capabilities. In Spring, water was available for waterfowl breeding and early nesting. By the time broods started to hatch however, water levels were often too low forcing the hens with broods to travel hazardous long distances in search of food and safe habitat. Installation of a variable level water control structure in a larger earthen dam will allow the MTFWP to impound more water and manage it to create a hemi-marsh condition, which is vital for optimum waterfowl production.

Improvements: DU constructed a 3,924-foot long, 12-foot wide earthen embankment with 3:1 side slopes. The fill used to construct the embankment came from a large borrow area located inside the designated impoundment site.

A variable level water control structure was installed in the berm of the embankment. The 60-inch diameter corrugated metal pipe (CMP) riser with attached trash rack, has an 18-inch diameter,

14-foot-long CMP inlet pipe and a 24-inch diameter, 48-foot-long CMP outlet pipe. Stoplogs housed inside the riser can be added or removed to manage water levels as desired. Approximately 2,015 feet of sinuous patterned (s-shaped) level-ditches were excavated between the newly constructed embankment and the Milk River. This excavation increased waterfowl breeding pair territory sites, provided brood travel corridors and enhanced water movement throughout the marsh basin. These 20-foot wide ditches have a depth of 3 feet with 3:1 side slopes. The spoil was placed adjacent to the ditches on the outside curves to form small islands which provide excellent loafing and nesting sites for geese and ducks.

An 1,100-foot-long 20-foot wide diversion channel was excavated to divert run-off water towards the impoundment. Located between the diversion channel and new embankment is a 685-foot wide natural emergency spillway.

The existing fixed level CMP water control structure was lowered to improve the overflow capabilities of the riser barrel. A level-ditch excavated between the existing embankment and the new embankment serves not only as additional pair habitat, but also to improve the conveyance of water between the two water control structures. All disturbed areas were reseeded with a dense nesting cover seed mixture.

At the full supply level of 2579.5-feet above mean sea level, the newly created 127-acre impoundment will store 340 acre-feet of water. The project was completed in December 1988.

Quantities:

Earthwork (includes diversion channel)	39,973	cubic yards
Level ditching	4,776	cubic yards
Water for Dike Compaction	377,500	gallons
18-inch diameter CMP inlet pipe	14	linear feet
24-inch diameter CMP outlet pipe	48	feet
60-inch diameter CMP riser	1	

Wildlife Values:

Mallards, pintails, wigeons, gadwalls, blue-winged teals and Canada geese will benefit most from project development. When water is available, large numbers of geese nest on the WMA. Snow geese and tundra swans utilize the area during migration. High concentrations of godwits use the WMA as do sandpipers, Wilson's phalaropes, lesser yellowlegs and great blue herons. Golden eagles have also been seen on the WMA.

Year round residents include ring-necked pheasants, sage and sharp-tailed grouse, gray partridge, white-tailed and mule deer and antelope.

Management Agreement: The MTFWP is responsible for all routine operations and maintenance on the project area. These duties include: regularly inspecting the water level control structures and earthen embankments and making any necessary repairs promptly; seeding all disturbed areas; conducting breeding pair counts, nesting surveys, brood surveys, etc. to determine waterfowl utilization; and managing water levels, including periodic drawdowns. The Site Specific Agreement is in effect for 30 years commencing March 4, 1988.

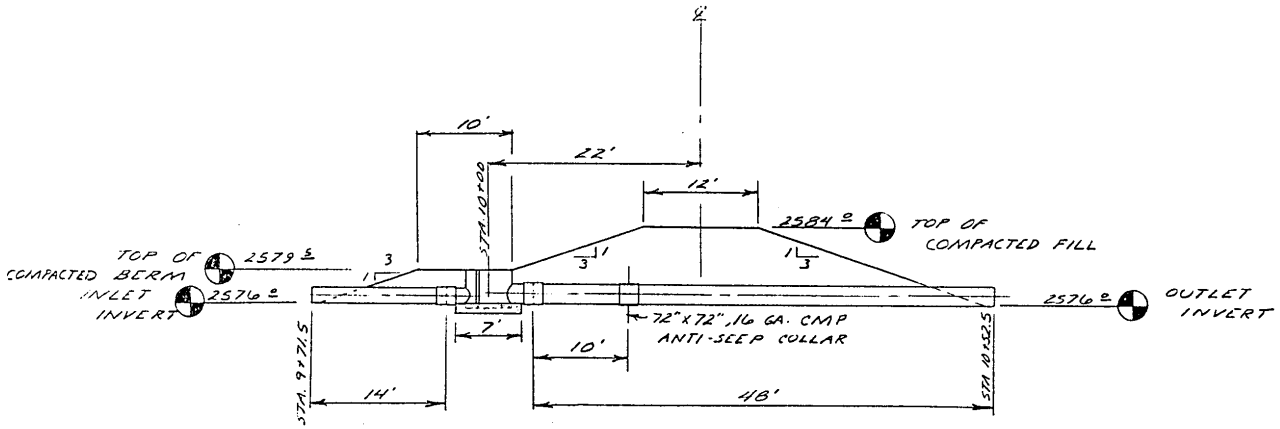

CONTROL STRUCTURE ℄ PROFILE

(7)

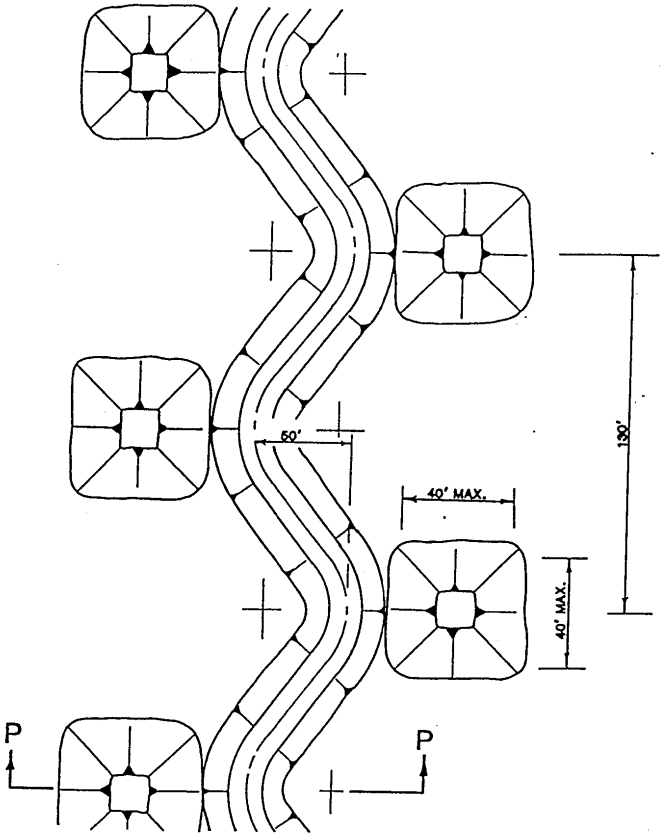

TYPICAL LEVEL DITCH PLAN

NTS

APPENDIX D – Species List

BIRDS			
Alder Flycatcher	Cinnamon teal	Lark Sparrow*	Say's Phoebe*
American Avocet*	Clark's Grebe	Least Flycatcher*	Semipalmated Plover
American Bittern*	Clay-Colored Sparrow*	Least Sandpipier	Semipalmated
American Coot*	Cliff Swallow*	Lesser Scaup	Sharp-tailed Grouse*
American Crow*	Common Goldeneye*	Lesser Yellowlegs	Short-eared Owl
American Goldfinch*	Common Grackle*	Lincoln's Sparrow	Snow Bunting
American Kestrel*	Common Merganser*	Loggerhead Shrike	Snow Goose
American Pipit	Common Nighthawk*	Long-billed Curlew*	Snowy Owl*
American Robin*	Common Poorwill	Long-billed Dowitcher	Solitary Sandpiper
American Redstart	Common Raven	Long-eared Owl	Song Sparrow*
American Tree Sparrow*	Common Redpoll	Mallard*	Sora
American White Pelican*	Common Tern*	Marbled Godwit*	Spotted Sandpiper*
American Wigeon	Common Yellowthroat*	Marsh Wren*	Spotted Towhee
Baird's Sandpiper	Cooper's Hawk	McCown's Longspur*	Sprague's Pipit*
Baird's Sparrow*	Dark eyed Junco	Merlin	Swainson's Hawk*
Bald Eagle*	Double-crested	Mourning Dove*	Tree Swallow*
Baltimore Oriole	Downy Woodpecker	Northern Flicker*	Tundra Swan*
Bank Swallow*	Dusky Flycatcher	Northern Harrier*	Turkey Vulture
Barrow's Goldeneye	Eared Grebe*	Northern Rough-winged Swallow*	Upland Sandpiper
Belted Kingfisher	Eastern Kingbird*	Northern Shoveler*	Veery
Black Tern*	Eurasian Collared-Dove	Northern Shrike	Vesper Sparrow*
Black-Bellied Plover	European Starling	Orange-crowned Warbler	Virginia Rail
Black-billed Magpie*	Ferruginous Hawk*	Osprey	Warbling Vireo
Black-capped Chickadee	Field Sparrow	Pectoral Sandpiper	Western Grebe*
Black crowned Night-Heron	Forster's Tern*	Pied-billed Grebe*	Western Kingbird*
Black necked Stilt*	Fox Sparrow	Prairie Falcon	Western Meadowlark*
Blackpoll warbler	Franklin's Gull	Red-breasted Merganser	Western Sandpiper
Blue Jay	Gadwall*	Red-eyed Vireo	Western Wood-pewee*
Blue-winged Teal*	Golden Eagle*	Redhead*	White-breasted
Bobolink	Grasshopper Sparrow*	Redheaded woodpecker	White-crowned
Bohemian Waxwing	Gray Catbird*	Red necked Grebe	White-faced Ibis
Bonaparte's Gull	Gray Partridge*	Red-necked Phalarope	Wild Turkey
Brewer's Blackbird*	Great Blue Heron*	Red-tailed Hawk*	Willet*
Brewer's Sparrow*	Great Horned Owl*	Red-winged Blackbird*	Willow Flycatcher
Brown Thrasher*	Greater Yellowlegs	Ring-billed Gull*	Wilson's Phalarope*
Brown-headed Cowbird*	Green-winged Teal	Ring-necked Duck	Wilson's Snipe
Bufflehead	Hoary Redpoll	Ring-necked Pheasant*	Wilson's Warbler
Bullock's Oriole*	Hoode Merganser	Rock Pigeon	Wood Duck
Burrowing Owl*	Horned Grebe	Rock Wren*	Yellow Warbler*
California Gull*	Horned Lark*	Rose-breasted Grosbeak	Yellow-breasted Chat
Canada Goose*	House Finch	Ross's Goose	Yellow-headed
Canvasback*	House Sparrow	Rough-legged Hawk	Yellow-rumped warbler
Cedar Waxwing*	House Wren*	Ruddy Duck*	
Chestnut-collared Longspur	Killdeer*	Sandhill Crane	
Chipping Sparrow	Lark Bunting*	Savannah Sparrow*	

*These species have been observed on or near the wildlife management area. All other species may be present on the wildlife management are based on the habitat present and their known distribution, but actual observations have not been recorded.

MAMMALS	MAMMALS	AMPHIBIANS
American Beaver*	Mule Deer*	
American Mink*	Muskrat*	Boreal Chorus Frog*
Badger*	Northern Pocket Gopher*	Great Plains Toad
Big Brown bat*	Norway Rat	Northern Leopard Frog*
Black-tailed Prairie Dog*	Olive-backed Pocket Mouse*	Plains Spadefoot
Bobcat*	Porcupine*	Western Tiger Salamander
Bushy-tailed Woodrat	Prairie Vole	Woodhouse's Toad
Common Raccoon*	Preble's Shrew	
Coyote*	Pronghorn*	
Deer Mouse*	Pygmy Shrew	
Desert Cottontail*	Red Fox*	
Dusky Shrew	Richardson's Ground Squirrel*	
Eastern Red Bat*	Sagebrush Vole	
Hayden's Shrew	Short-tailed Weasel	REPTILES
Hoary Bat*	Silver Haired bat*	Gophersnake*
House Mouse	Striped Skunk*	Greater Short-horned Lizard
Least Weasel	Swift Fox*	North American racer
Little Brown Myotis*	Thirteen-line Ground Squirrel	Painted Turtle
Long-legged Myotis*	Western harvest Mouse	Plains Gartersnake*
Long-tailed Vole	Western Jumping Mouse	Plains Hog-nosed snake
Long-tailed Weasel	Western Small-footed Myotis	Prairie Rattlesnake*
Masked Shrew*	White-footed Mouse	Terrestrial Gartersnake*
Meadow Vole*	White-tailed Deer	
Merriam's Shrew	White-tailed Jack rabbit*	
Mountain Cottontail	Yuma Myotis*	
Mountain Lion		

*These species have been observed on or near the wildlife management area. All other species may be present on the wildlife management are based on the habitat present and their known distribution, but actual observations have not been recorded.