PROJECT LOCATION

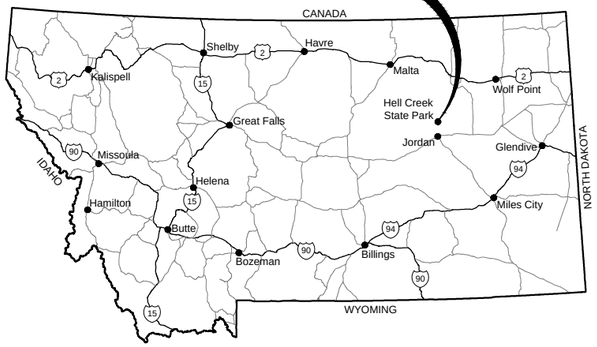

MONTANA FISH WILDLIFE & PARKS

HELL CREEK STATE PARK INFRASTRUCTURE IMPROVEMENTS

CONSTRUCTION DRAWINGS

SECTION 26, TOWNSHIP 21 NORTH, AND RANGE 37 EAST

NOT TO SCALE

SHEET INDEX

PROJECT: 1-17113

DATE: FEBRUARY 8, 2018

SHEET 1	COVER
SHEET 2	LEGEND - ABBREVIATIONS AND GENERAL NOTES
SHEET 3	OVERALL SITE PLAN
SHEET 4	WATER SYSTEM PLAN
SHEET 5	WATER MAIN IN PLAN AND PROFILE
SHEET 6	WATER MAIN OUT PLAN AND PROFILE
SHEET 7	FISH CLEANING STATION PLAN
SHEET 8	SAND FILTER AND DRAINFIELD PLAN
SHEET 9	SEWER FORCEMAIN PLAN AND PROFILE
SHEET 10	SEWER FORCEMAIN PLAN AND PROFILE
SHEET 11	SEWER FORCEMAIN PLAN AND PROFILE
SHEET 12	WATER TANK DETAILS
SHEET 13	WATER PIPING DETAILS
SHEET 14	PUMP BUILDING ELEVATIONS
SHEET 15	SEWER DETAILS
SHEET 16	SEWER DETAILS
SHEET 17	RECIRCULATION TANK DETAILS
SHEET 18	SAND FILTER DETAILS
SHEET 19	DOSE TANK DETAILS
SHEET 20	DRAINFIELD DETAILS
SHEET 21	FENCING DETAILS
SHEET 22	DETAILS
SHEETS E1-E11	ELECTRICAL

PLANS PREPARED FOR:

Montana Fish Wildlife and Parks
HELL CREEK STATE PARK

Montana Fish, Wildlife & Parks

APPROVED BY:

Todd Kuxhaus, P.E.
GREAT WEST ENGINEERING

MONTANA TODD KUXHAUS 14589 PE LICENSED PROFESSIONAL ENGINEER 1-18-2018

QA/QC BY:

Steve F. Lipetzky, P.E.
GREAT WEST ENGINEERING

MONTANA STEVE F. LIPETZKY 38458 PE LICENSED PROFESSIONAL ENGINEER 1-18-2018

PLANS PREPARED BY:

BRET ANDERSON
TRAVIS CRAIG, E.I.

GreatWest engineering®
2501 BELT VIEW DRIVE
HELENA, MT 59601
(406)449-8627

NO.	REVISION DESCRIPTION	BY	DATE
△			
△			
△			
△			
△			
△			

SET NO.

SHEET NO.

1

F:\1-17113 Montana FWP Hell Creek Campground Renovations\CADD 1-17113\Sheets\1-17113-01-Cover.dwg

ABBREVIATIONS

@	AT
Δ	ANGLE OF DEFLECTION, DELTA ANGLE
<PT	ANGLE POINT
AB	ANCHOR BOLT
ABDN	ABANDON
AC	ASBESTOS CONCRETE
ADDN	ADDITIONAL
ADJ	ADJACENT
AFF	ABOVE FINISHED FLOOR
ALT	ALTERNATE
ANSI	AMERICAN NATIONAL STANDARDS INSTITUTE
APPROX	APPROXIMATE
APVD	APPROVED
ARCH	ARCHITECTURE, ARCHITECTURAL
ASPH	ASPHALT
AVE	AVENUE
AVG	AVERAGE
BFV	BUTTERFLY VALVE
BLDG	BUILDING
BLK	BLOCK
BLVD	BOULEVARD
BM	BEAM, BENCHMARK
BOT	BOTTOM
BRG	BEARING
BRKT	BRACKET
BVC	BEGIN VERTICAL CURVE
C–C	CENTER TO CENTER
CHAN	CHANNEL
CHK	CHECK
CI	CAST IRON
CIPC	CAST–IN–PLACE CONCRETE
CIRC	CIRCULAR
CJ	CONSTRUCTION JOINT, CONTROL JOINT
℄	CENTER LINE
CLR	CLEAR, CLEARANCE
CMP	CORRUGATED METAL PIPE
CMU	CONCRETE MASONRY UNITS
CO	CLEANOUT
COL	COLUMN
CONC	CONCRETE
CONSTR	CONSTRUCTION
CONT	CONTINUE, CONTINUED, CONTINUOUS
CONTR	CONTRACTOR
COORD	COORDINATE
CP	CONTROL PANEL, CONTROL POINT
CPLG	COUPLING
CTR	CENTER
CTV	CABLE TELEVISION
CU	CUBIC, COPPER
CF	CUBIC FEET
CULV	CULVERT
CY	CUBIC YARD
DET	DETAIL
DI	DUCTILE IRON, DRAIN INLET
DIA, ø	DIAMETER
DIAG	DIAGONAL
DIM	DIMENSION
DR	DRIVE
DWG	DRAWING
E	EAST
EA	EACH
EL, ELEV	ELEVATION
ELB	ELBOW
ELEC	ELECTRIC, ELECTRICAL
ENCL	ENCLOSE
ENGR	ENGINEER
EOP	EDGE OF PAVEMENT
EQ	EQUAL, EQUALLY
EQ SP	EQUALLY SPACED
EQUIP	EQUIPMENT
EQUIV	EQUIVALENT
EVC	END VERTICAL CURVE
EW	EACH WAY
EXC	EXCAVATE
EXP	EXPANSION
EXP JT	EXPANSION JOINT
EXST	EXISTING
FCV	FLOW CONTROL VALVE
FD	FLOOR DRAIN
FDN	FOUNDATION
FES	FLARED END SECTION
FET	FLARED END TERMINAL
FF	FINISHED FLOOR
FG	FINISH GRADE
FHYD	FIRE HYDRANT
FJ	FLANGE JOINT
FL	FLOW LINE
FLEX	FLEXIBLE
FM	FORCEMAIN
FT	FOOT, FEET
FO	FIBER OPTIC
FTG	FOOTING, FITTING
G	NATURAL GAS
GA	GAGE, GAUGE
GAL	GALLON
GALV	GALVANIZED
GND	GROUND
GVL	GRAVEL
HB	HOSE BIB
HDPE	HIGH DENSITY POLYETHYLENE
HOR, HORIZ	HORIZONTAL
HWY	HIGHWAY
HYD	HYDRANT
ID	INSIDE DIAMETER
IE	INVERT ELEVATION
IN	INCH
INV	INVERT
JB	JUNCTION BOX
JT	JOINT
K	RATE OF VERTICAL CURVATURE
LBS	POUNDS
LF	LINEAR FEET
LN	LANE
LPG	LIQUID PROPANE GAS
LT	LEFT
MAX	MAXIMUM
MD	MEASURE DOWN
MFD	MANUFACTURED
MFR	MANUFACTURE, MANUFACTURER
MH	MANHOLE
MIN	MINIMUM
MISC	MISCELLANEOUS
MJ	MECHANICAL JOINT
MOV	MOTOR OPERATED VALVE
MPWSS	MONTANA PUBLIC WORKS STANDARD SPECIFICATIONS
N	NORTH
NE	NORTHEAST
NG	NATURAL GAS
NIC	NOT IN CONTRACT
NO	NUMBER
NOM	NOMINAL
NTS	NOT TO SCALE
NW	NORTHWEST
OC	ON CENTER
OD	OUTSIDE DIAMETER
OF	OVERFLOW
OH	OVERHEAD
OHP	OVERHEAD POWER
OHT	OVERHEAD TELEPHONE
OPNG	OPENING
PC	POINT OF CURVATURE
PCC	POINT OF COMPOUND CURVATURE
PE	PLAIN END, POLYETHYLENE
PERP	PERPENDICULAR
PI	POINT OF INTERSECTION
PL	PROPERTY LINE
PNL	PANEL
PRC	POINT OF REVERSE CURVATURE
PREFAB	PREFABRICATED
PRELIM	PRELIMINARY
PREP	PREPARE, PREPARATION
PROP	PROPERTY
PRV	PRESSURE REDUCING VALVE
PSF	POUNDS PER SQUARE FOOT
PSI	POUNDS PER SQUARE INCH
PT	POINT, POINT OF TANGENCY
PVC	POLYVINYL CHLORIDE
PVI	POINT OF VERTICAL INTERSECTION
PVMT	PAVEMENT
R, RAD	RADIUS
RC	REINFORCED CONCRETE
RCP	REINFORCED CONCRETE PIPE
RD	ROAD
RDCR	REDUCER
REBAR	REINFORCEMENT BAR
REF	REFERENCE
REINF	REINFORCE
REQD	REQUIRED
RR	RAILROAD
RST	REINFORCING STEEL
RT	RIGHT
R/W	RIGHT–OF–WAY
S	SOUTH, SANITARY SEWER
SAN	SANITARY
SCH	SCHEDULE
SD	STORM DRAIN
SDWK	SIDEWALK
SE	SOUTHEAST
SECT	SECTION
SF	SQUARE FOOT
SHT	SHEET
SIM	SIMILAR
SLP	SLOPE
SPEC	SPECIFICATION
SQ	SQUARE
SSTL	STAINLESS STEEL
STA	STATION
SS	SANITARY SEWER SERVICE
STD	STANDARD
ST	STREET
STL	STEEL
STRUCT	STRUCTURE
SW	SOUTHWEST
SYM	SYMMETRICAL
TB	THRUST BLOCK
TBC	TOP BACK OF CURB
TBM	TEMPORARY BENCH MARK
TEL	TELEPHONE
TEMP	TEMPORARY
THRU	THROUGH
TYP	TYPICAL
UG	UNDERGROUND
UGP	UNDERGROUND POWER
UGT	UNDERGROUND TELEPHONE
UTIL	UTILITY
V	VALVE, VOLT
VB	VALVE BOX
VERT	VERTICAL
VOL	VOLUME
W	WEST, WATER
WTR	WATER
WD	WOOD
W/	WITH
W/O	WITHOUT
WL	WETLAND
WM	WIRE MESH, WATER METER
WS	WATERSTOP, WATER SURFACE, WATER SERVICE
WT	WEIGHT
WV	WATER VALVE
WWF	WELDED WIRE FABRIC
WWM	WELDED WIRE MESH
XFMR	TRANSFORMER
X–ING	CROSSING
XS	CROSS SECTION
YD	YARD

LEGEND

EXISTING	PROPOSED	DESCRIPTION
		MAJOR CONTOUR
		MINOR CONTOUR
OHT	OHT	OVERHEAD TELEPHONE
UGT	UGT	UNDERGROUND TELEPHONE
CTV	CTV	CABLE TELEVISION
FO	FO	FIBER OPTIC
G	G	NATURAL GAS
OHP	OHP	OVERHEAD POWER
UGP	UGP	UNDERGROUND POWER
S	S	SANITARY SEWER
SS	SS	SANITARY SEWER SERVICE
FM	FM	SANITARY SEWER FORCEMAIN
SD	SD	STORM DRAIN
		STORM CULVERT
W	W	WATER
WS	WS	WATER SERVICE
		CHAINLINK FENCE
X	X	BARBED WIRE FENCE
		WOOD FENCE
		PAVED ROAD
		GRAVEL ROAD
		PROPERTY/LOT LINE
		PROPERTY EASEMENT
		PROPERTY SETBACK
		RIGHT–OF–WAY
		CITY LIMIT/DISTRICT BOUNDARY
		RAILROAD
		DITCH
		WATER EDGE
WL		WETLAND
		BUILDING
		BENCHMARK
		CONTROL POINT
		PROPERTY PIN
		BORING
		MONITORING WELL
		TEST PIT
		BOLLARD
		MAIL BOX
		SIGN

EXISTING	PROPOSED	DESCRIPTION
		STUMP
		SHRUB/BUSH
		TREE–CONIFER
		TREE–DECIDUOUS
		TREE LINE
		COMMUNICATION MANHOLE
		COMMUNICATION VAULT
		TELEPHONE RISER
		CABLE TV RISER
		NATURAL GAS METER
		NATURAL GAS RISER
		NATURAL GAS VALVE
		LIGHT POLE
		STREET LIGHT POLE
		POWER RISER
		PAD MOUNTED TRANSFORMER
		POWER VAULT
		UTILITY POLE
		GUY WIRE
		SANITARY MANHOLE
		SANITARY CLEANOUT
		SANITARY LAMPHOLE
		STORM MANHOLE
		STORM ROUND INLET
		STORM SQUARE INLET
		STORM CATCH BASIN
		11.25° ELBOW
		22.50° ELBOW
		45° ELBOW
		90° ELBOW
		TEE
		CROSS
		CAP
		FIRE HYDRANT
		GATE VALVE
		REDUCER
		WATER METER
		WELL
		CURB STOP
		FROST FREE HYDRANT

GENERAL NOTES:

1. THIS IS A STANDARD LEGEND AND ABBREVIATION LIST. THEREFORE, NOT ALL SYMBOLS AND ABBREVIATIONS MAY BE USED ON THIS PROJECT.
2. UNLESS MODIFIED BY THE CONTRACT DOCUMENTS, ALL WORK WILL CONFORM TO THE MONTANA PUBLIC WORKS STANDARD SPECIFICATIONS, SIXTH EDITION, APRIL 2010 (REFERRED TO COLLECTIVELY AS MPWSS).
3. EXISTING UNDERGROUND UTILITIES SHOWN ARE FROM THE BEST INFORMATION AVAILABLE. THIS INFORMATION IS APPROXIMATE AND MAY BE INCOMPLETE. FOR ACCURATE LOCATION, THE CONTRACTOR SHALL CONTACT, PRIOR TO EXCAVATION, THE UTILITIES UNDERGROUND LOCATION CENTER AT: 1–800–424–5555.

PROJECT NOTES:

1. THE LOCATIONS OF EXISTING PARK OWNED UTILITIES IS APPROXIMATE. THE CONTRACTOR SHALL MAKE PROVISIONS FOR REPAIRS IN THE EVENT EXISTING UTILITIES ARE DAMAGED DURING CONSTRUCTION.
2. THE PROJECT LIMITS ARE WITHIN THE BOUNDARY OF HELL CREEK STATE PARK.

GENERAL DESIGN DESIGNATIONS:

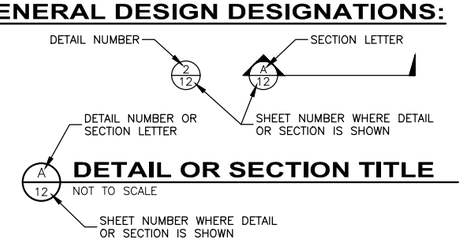

NO.	REVISION DESCRIPTION	BY	DATE

PROJECT: 1-17113
DESIGNED: TKK / BAA
DRAWN: BAA / TLC
CHECKED: CRP
APPROVED: TKK
DATE: FEBRUARY 8, 2018

MONTANA TODD KAYHAUS PE 14589 PROFESSIONAL ENGINEER

GreatWest engineering©
2501 BELT VIEW DRIVE
HELENA, MT 59601
(406)449-8627

MONTANA FISH WILDLIFE & PARKS
HELL CREEK STATE PARK
INFRASTRUCTURE IMPROVEMENTS
LEGEND - ABBREVIATIONS AND GENERAL NOTES

SHEET NO.
2
OF 22

F:\1-17113 Montana FWP Hell Creek Campground Renovations\CADD 1-17113\Sheets\1-17113-02-General.dwg

F:\1-17113 Montana FWP Hell Creek Campground Renovations\CADD 1-17113\Sheets\1-17113-03-Overall Site Plan.dwg

MONTANA FISH WILDLIFE & PARKS
HELL CREEK STATE PARK
INFRASTRUCTURE IMPROVEMENTS

OVERALL SITE PLAN

SHEET NO. 3 OF 22

GreatWest engineering®
2501 BELT VIEW DRIVE
HELENA, MT 59601
(406)449-8627

MONTANA LICENSED PROFESSIONAL ENGINEER
TODD KOXHAUS
14589 PE
10-08

PROJECT: 1-17113	NO.	REVISION DESCRIPTION	BY	DATE
DESIGNED: TKK / BAA				
DRAWN: BAA / TLC				
CHECKED: CRP				
APPROVED: TKK				
DATE: FEBRUARY 8, 2018				

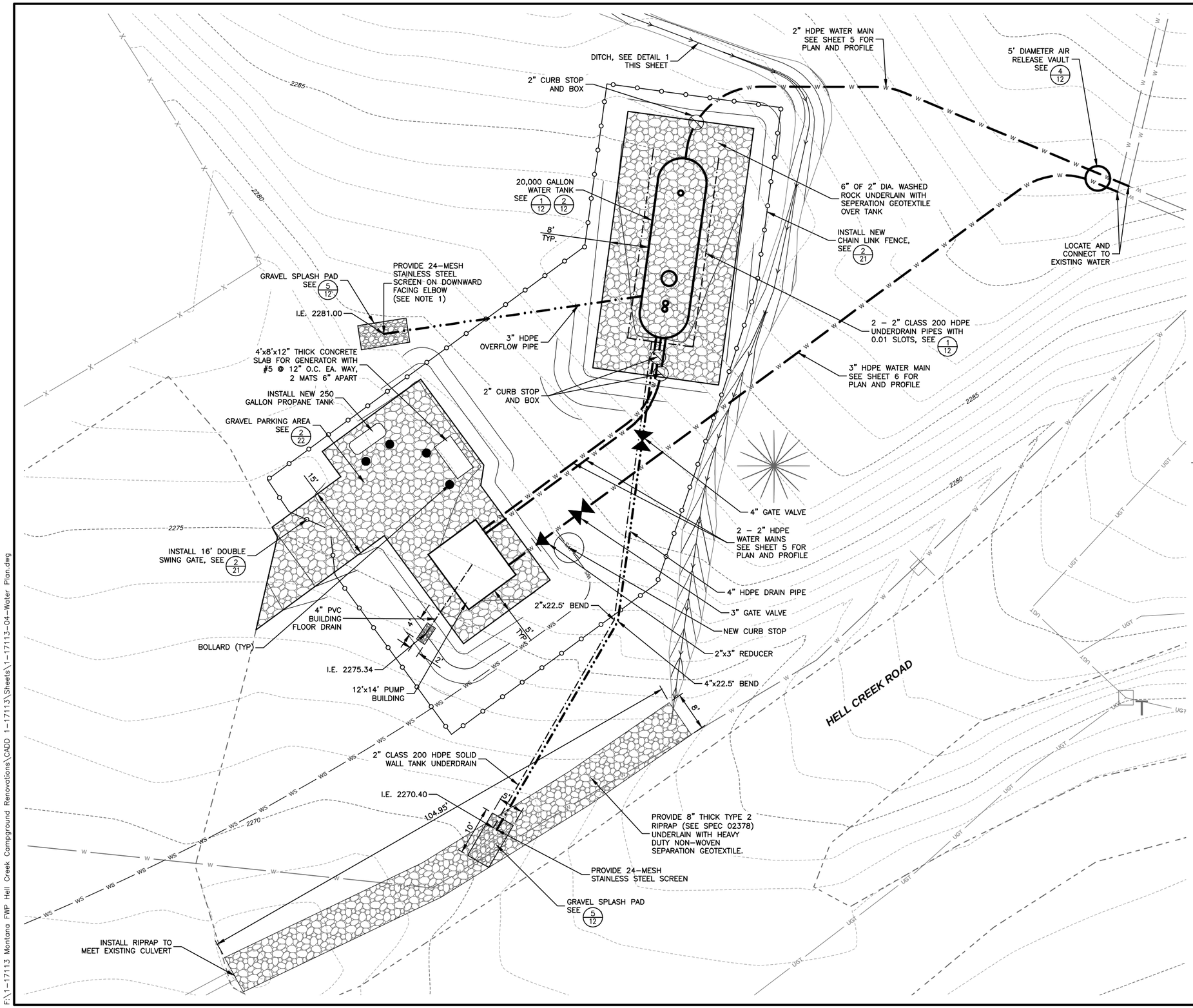

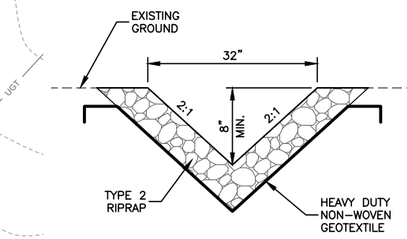

1/4 **TYPICAL V-DITCH**
NOT TO SCALE

NOTES:
1. DISCHARGE END OF PIPING MUST BE BETWEEN 12 AND 24 INCHES ABOVE GROUND SURFACE.

NO.	REVISION DESCRIPTION	BY	DATE

PROJECT: 1-17113
DESIGNED: TKK / BAA
DRAWN: BAA / TLC
CHECKED: CRP
APPROVED: TKK
DATE: FEBRUARY 8, 2018

TODD KRAUS HEIL
14589 PE
PROFESSIONAL ENGINEER
MONTANA

GreatWest engineering©
2501 BELT VIEW DRIVE
HELENA, MT 59601
(406)449-8627

MONTANA FISH WILDLIFE & PARKS
HELL CREEK STATE PARK
INFRASTRUCTURE IMPROVEMENTS

WATER SYSTEM PLAN

SHEET NO.
4
OF 22

F:\1-17113 Montana FWP Hell Creek Campground Renovations\CADD 1-17113\Sheets\1-17113-04-Water Plan.dwg

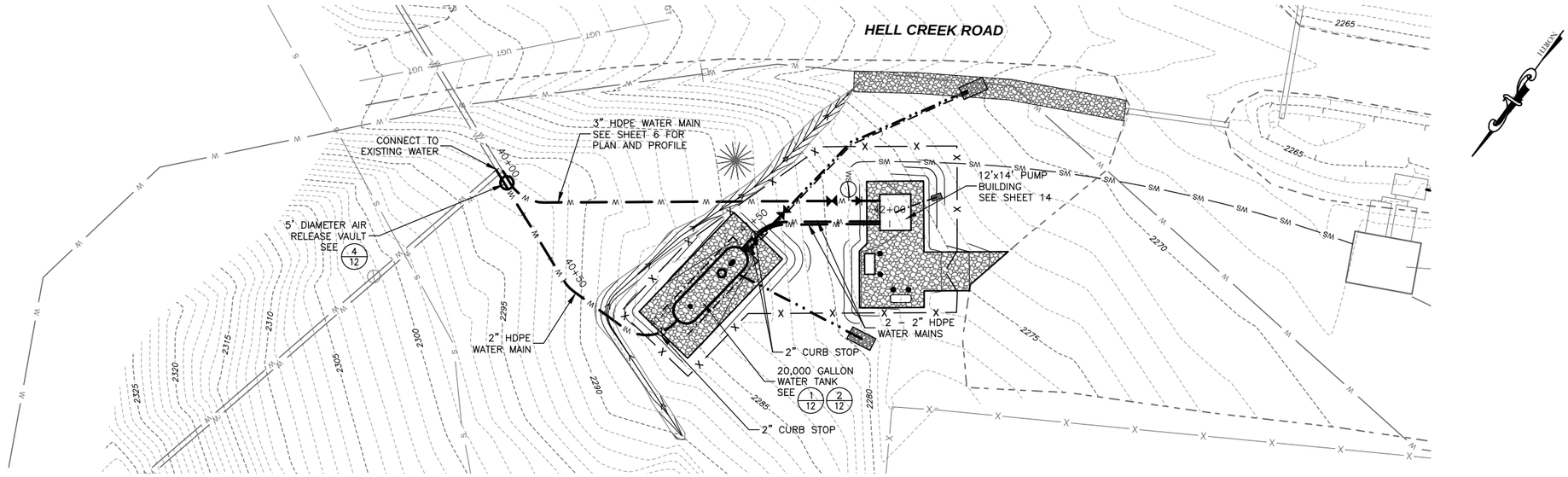

PLAN VIEW OF WATER MAIN IN

0 25 50
SCALE IN FEET

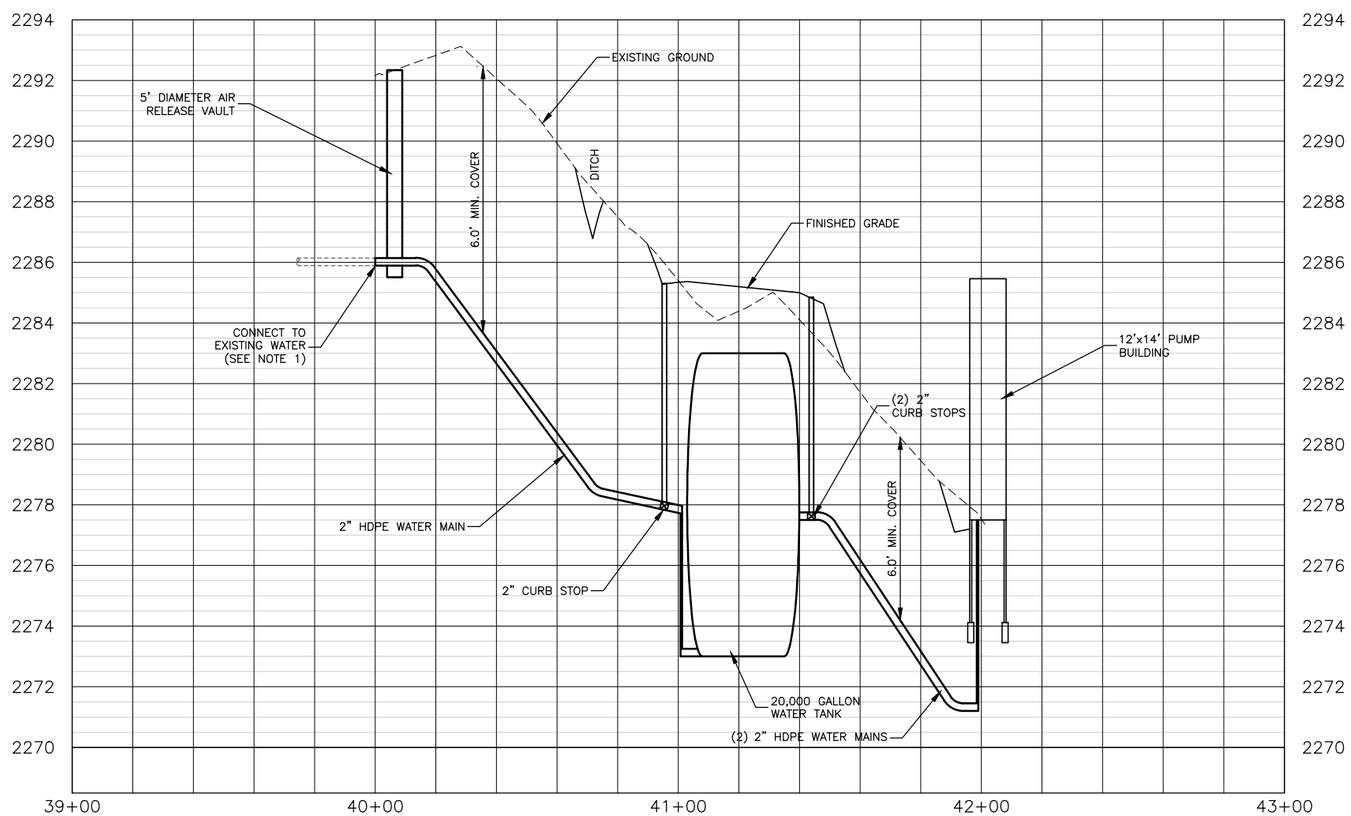

PROFILE VIEW OF WATER MAIN IN - STA. 39+00 TO STA. 43+00

HORIZONTAL SCALE: 1" = 50'
VERTICAL SCALE: 1" = 5'

NOTES:
1. CONTRACTOR TO POTHOLE AND LOCATE EXISTING WATER LINES PRIOR TO ORDERING AIR RELEASE VAULT TO VERIFY EXISTING PIPE DIAMETER, MATERIAL, AND DEPTH OF INSTALLATION.

NO.	REVISION DESCRIPTION	BY	DATE

PROJECT: 1-17113
DESIGNED: TKK / BAA
DRAWN: BAA / TLC
CHECKED: CRP
APPROVED: TKK
DATE: FEBRUARY 8, 2018

MONTANA PROFESSIONAL ENGINEER TODD KAHLAUS HOFFMAN 14589 PE

GreatWest engineering®
2501 BELT VIEW DRIVE
HELENA, MT 59601
(406)449-8627

MONTANA FISH WILDLIFE & PARKS
HELL CREEK STATE PARK
INFRASTRUCTURE IMPROVEMENTS
WATER MAIN IN PLAN AND PROFILE
STA. 39+00 TO STA. 43+00

SHEET NO.
5
OF 22

F:\1-17113 Montana FWP Hell Creek Campground Renovations\CADD 1-17113\Sheets\1-17113-05-Water PP.dwg

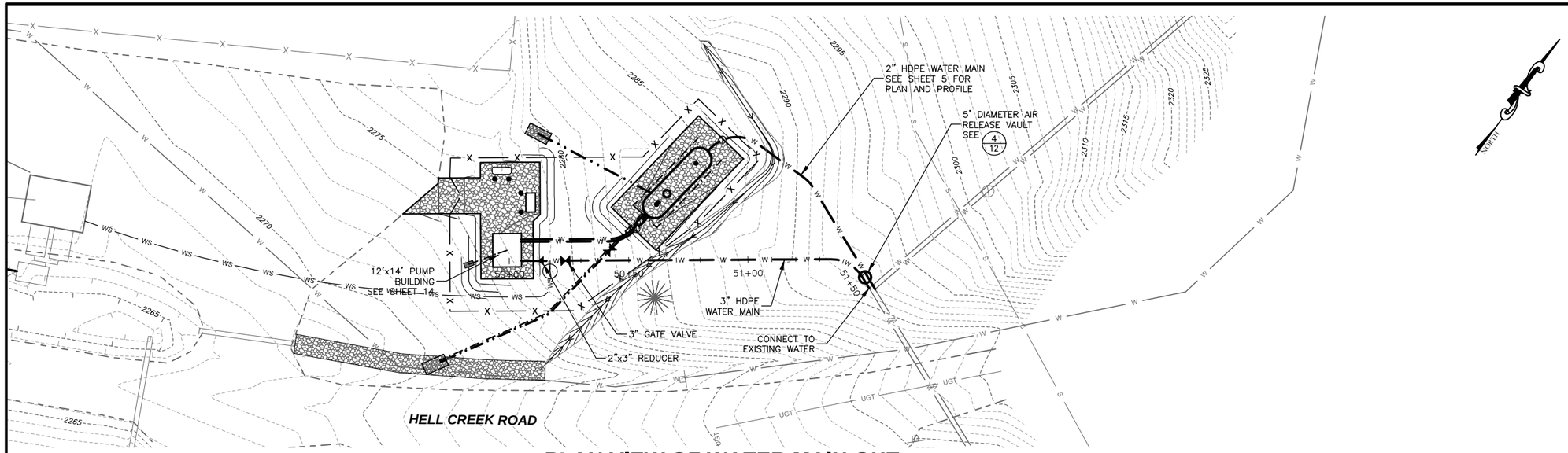

PLAN VIEW OF WATER MAIN OUT

0 25 50
SCALE IN FEET

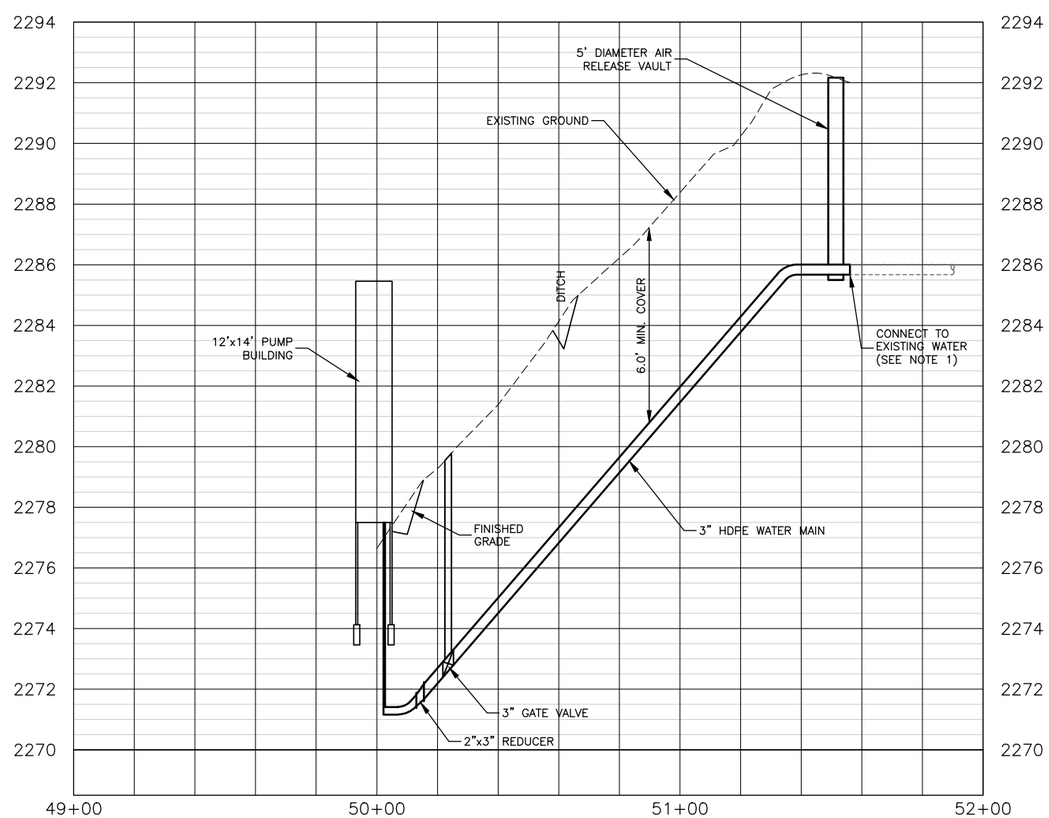

PROFILE VIEW OF WATER MAIN OUT - STA. 49+00 TO STA. 52+00

HORIZONTAL SCALE: 1" = 50'
VERTICAL SCALE: 1" = 5'

NOTES:
1. CONTRACTOR TO POTHOLE AND LOCATE EXISTING WATER LINES PRIOR TO ORDERING AIR RELEASE VAULT TO VERIFY EXISTING PIPE MATERIAL, DIAMETER, AND DEPTH OF INSTALLATION.

NO.	REVISION DESCRIPTION	BY	DATE

PROJECT: 1-17113
DESIGNED: TKK / BAA
DRAWN: BAA / TLC
CHECKED: CRP
APPROVED: TKK
DATE: FEBRUARY 8, 2018

MONTANA LICENSED PROFESSIONAL ENGINEER
TODD KAXHAUS
14589-PE
8-2-18

GreatWest engineering©
2501 BELT VIEW DRIVE
HELENA, MT 59601
(406)449-8627

MONTANA FISH WILDLIFE & PARKS
HELL CREEK STATE PARK
INFRASTRUCTURE IMPROVEMENTS
WATER MAIN OUT PLAN AND PROFILE
STA. 49+00 TO STA. 52+00

SHEET NO.
6
OF 22

F:\1-17113 Montana FWP Hell Creek Campground Renovations\CADD 1-17113\Sheets\1-17113-06-Water PP.dwg

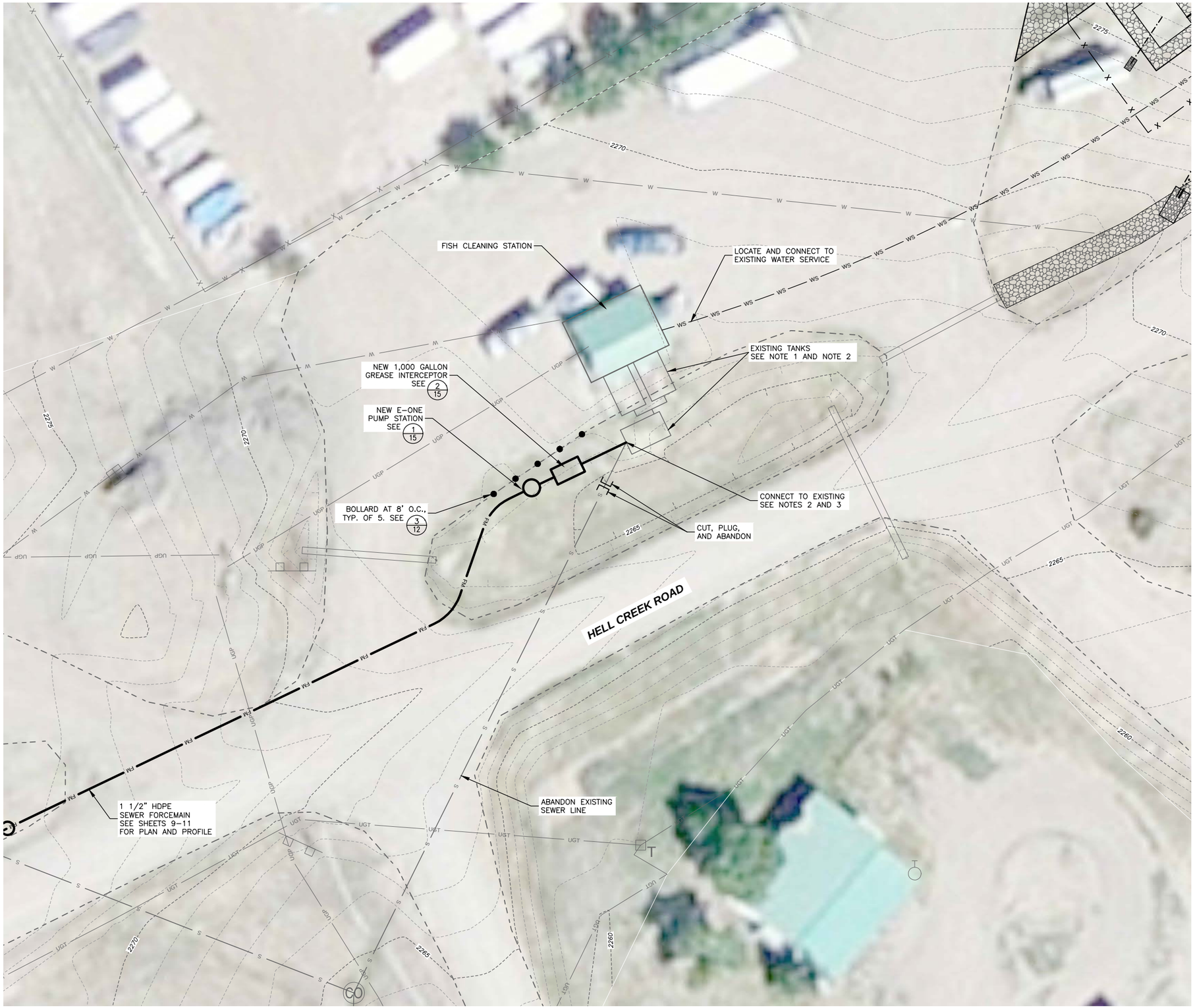

NOTES:

1. EMPTY EXISTING TANKS, REMOVE/DISPOSE OF EXISTING EFFLUENT FILTERS, AND INSTALL NEW EFFLUENT FILTERS. CONTRACTOR SHALL EMPTY TANKS AND MEASURE TO DETERMINE CORRECT EFFLUENT FILTER SIZES.
2. EXISTING TANK LOCATIONS ARE BASED ON BEST AVAILABLE INFORMATION. CONTRACTOR SHALL VERIFY ORIENTATION AND LOCATION OF TANKS FOR CONNECTION TO GREASE INTERCEPTOR.
3. CORE EXISTING TANK.

0 15 30
SCALE IN FEET

NO.	REVISION DESCRIPTION	BY	DATE

PROJECT: 1-17113
DESIGNED: TKK / BAA
DRAWN: BAA / TLC
CHECKED: CRP
APPROVED: TKK
DATE: FEBRUARY 8, 2018

TODD KAYHAUS HOFFMAN
14589-PE
PROFESSIONAL ENGINEER
MONTANA

GreatWest engineering®
2501 BELT VIEW DRIVE
HELENA, MT 59601
(406)449-8627

MONTANA FISH WILDLIFE & PARKS
HELL CREEK STATE PARK
INFRASTRUCTURE IMPROVEMENTS

FISH CLEANING STATION PLAN

SHEET NO.
7
OF 22

F:\1-17113 Montana FWP Hell Creek Campground Renovations\CADD 1-17113\Sheets\1-17113-07-Fish CS Plan.dwg

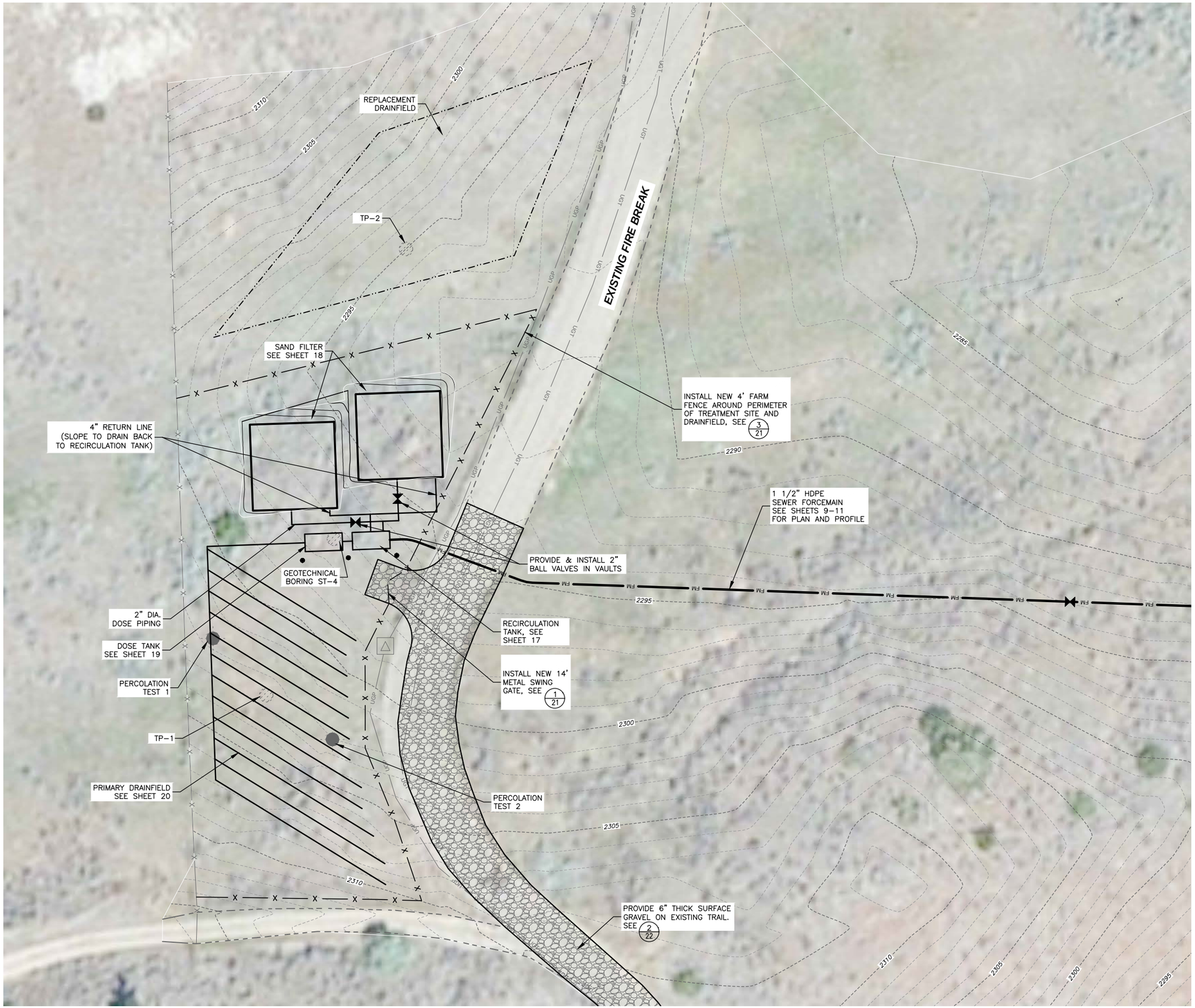

NO.	REVISION DESCRIPTION	BY	DATE

PROJECT: 1-17113
DESIGNED: TKK / BAA
DRAWN: BAA / TLC
CHECKED: CRP
APPROVED: TKK
DATE: FEBRUARY 8, 2018

MONTANA LICENSED PROFESSIONAL ENGINEER
TODD KAHLAUS HOFFMAN
14589-PE
2/8/2018

GreatWest engineering®
2501 BELT VIEW DRIVE
HELENA, MT 59601
(406)449-8627

MONTANA FISH WILDLIFE & PARKS
HELL CREEK STATE PARK
INFRASTRUCTURE IMPROVEMENTS

SAND FILTER AND DRAINFIELD PLAN

SHEET NO.
8
OF 22

F:\1-17113 Montana FWP Hell Creek Campground Renovations\CADD 1-17113\Sheets\1-17113-08-Drainfield Plan.dwg

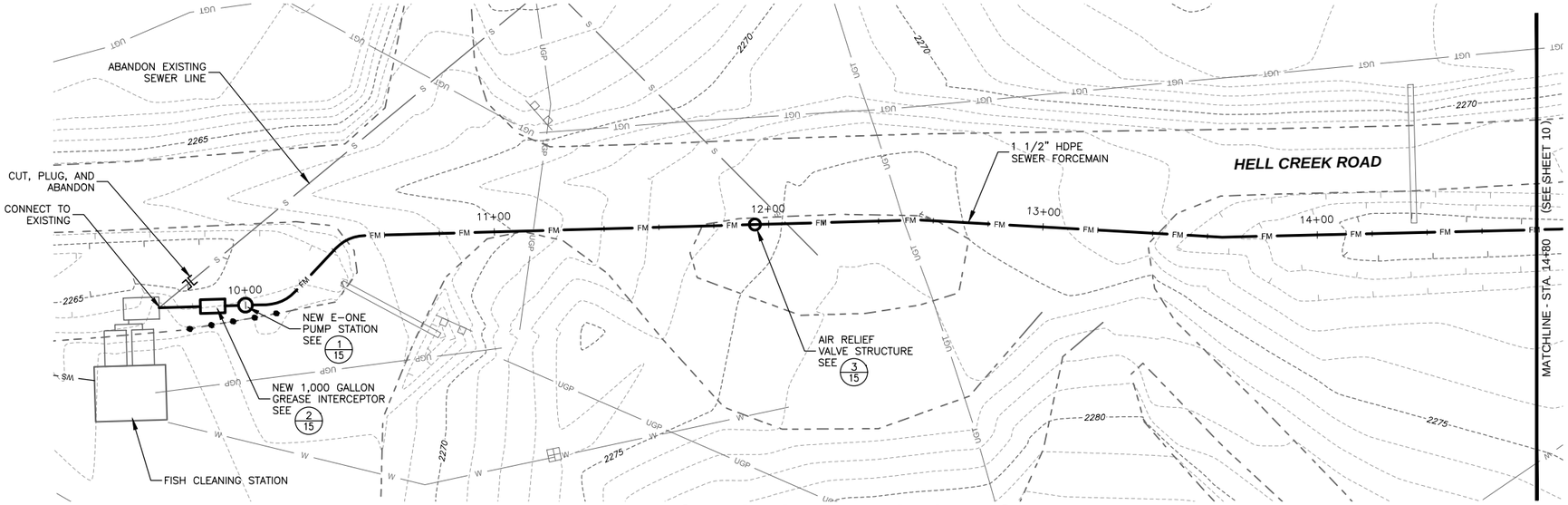

PLAN VIEW OF SEWER FORCEMAIN

0 25 50
SCALE IN FEET

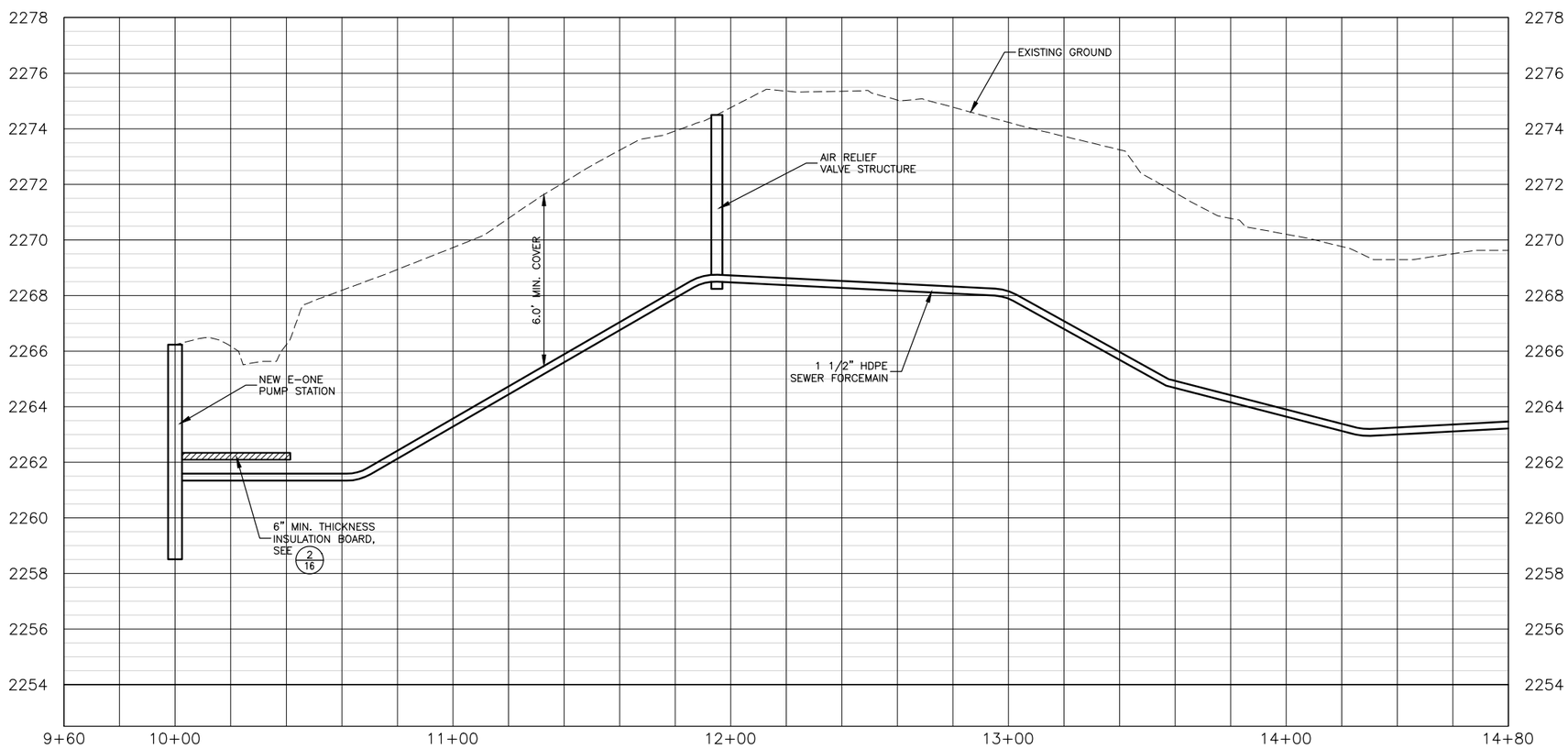

PROFILE VIEW OF SEWER FORCEMAIN - STA. 9+60 TO STA. 14+80

HORIZONTAL SCALE: 1" = 50'
VERTICAL SCALE: 1" = 5'

NOTE:
1. CONTRACTOR TO DETERMINE LOCATION OF EXISTING WATER SERVICE AND PROVIDE 10 FEET OF HORIZONTAL SEPARATION. FIELD ADJUSTMENT OF NEW FORCEMAIN MAY BE REQUIRED.

NO.	REVISION DESCRIPTION	BY	DATE

PROJECT: 1-17113
DESIGNED: TKK / BAA
DRAWN: BAA / TLC
CHECKED: CRP
APPROVED: TKK
DATE: FEBRUARY 8, 2018

MONTANA TODD KRAUS PE 14589 REGISTERED PROFESSIONAL ENGINEER

GreatWest engineering®
2501 BELT VIEW DRIVE
HELENA, MT 59601
(406)449-8627

MONTANA FISH WILDLIFE & PARKS
HELL CREEK STATE PARK
INFRASTRUCTURE IMPROVEMENTS
SEWER FORCEMAIN PLAN AND PROFILE
STA. 9+60 TO STA. 14+80

SHEET NO.
9
OF 22

F:\1-17113 Montana FWP Hell Creek Campground Renovations\CADD 1-17113\Sheets\1-17113-09-Forcemain PP.dwg

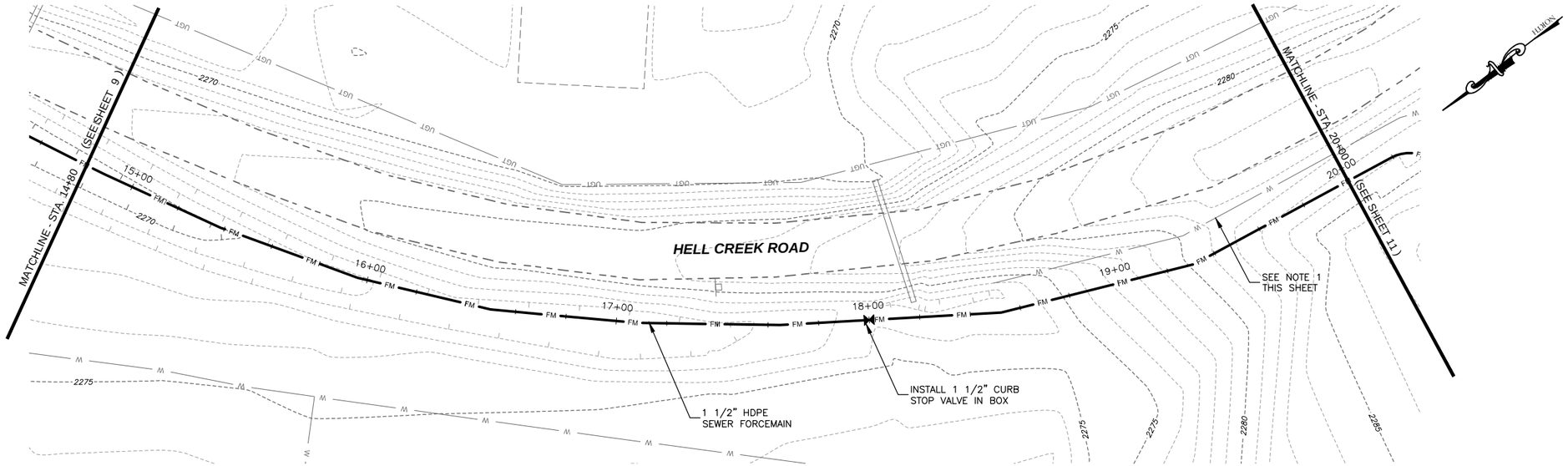

PLAN VIEW OF SEWER FORCEMAIN

0 25 50
SCALE IN FEET

NOTE:
1. CONTRACTOR TO DETERMINE LOCATION OF EXISTING WATER SERVICE AND PROVIDE 10 FEET OF HORIZONTAL SEPARATION. FIELD ADJUSTMENT OF NEW FORCEMAIN MAY BE REQUIRED.

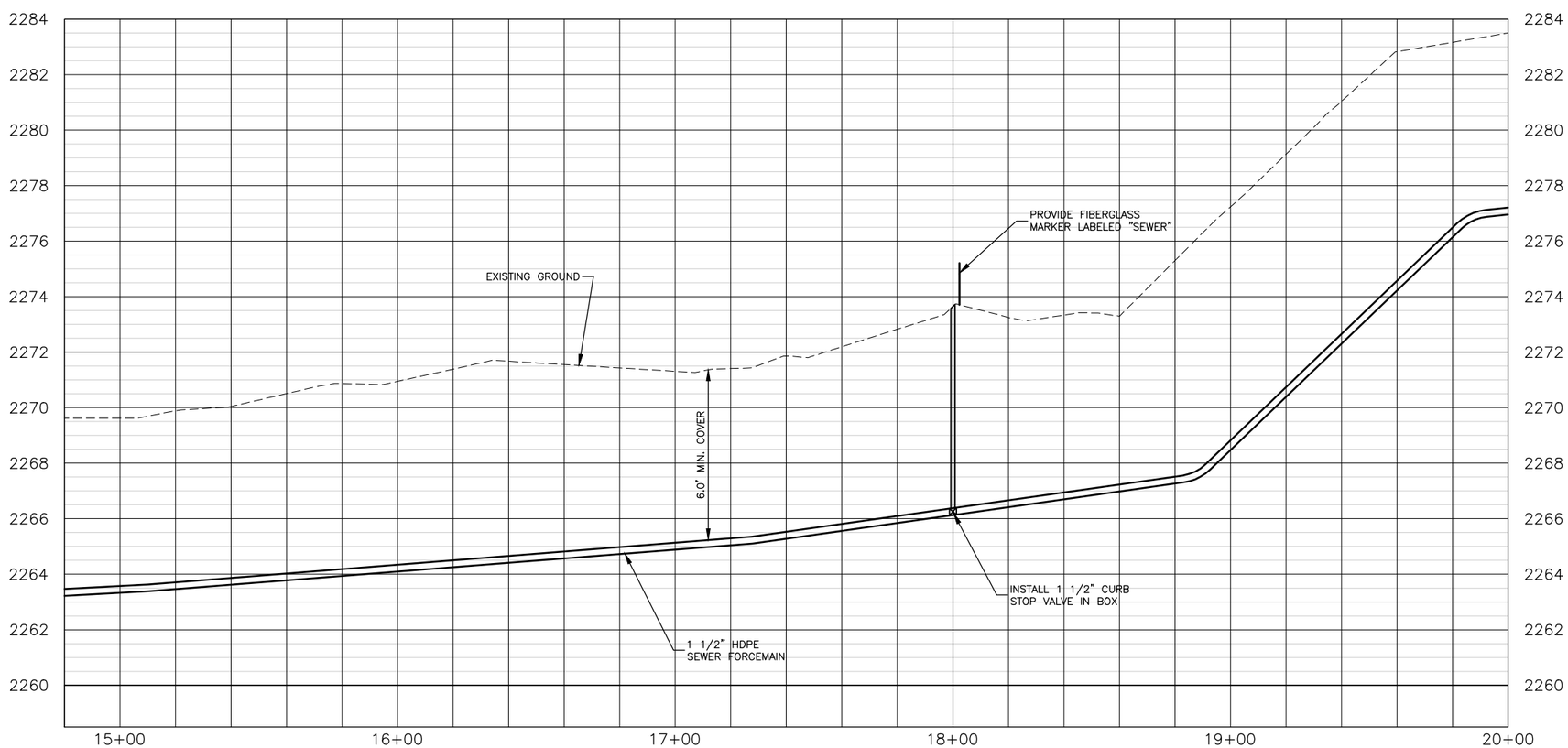

PROFILE VIEW OF SEWER FORCEMAIN - STA. 14+80 TO STA. 20+00

HORIZONTAL SCALE: 1" = 50'
VERTICAL SCALE: 1" = 5'

NO.	REVISION DESCRIPTION	BY	DATE

PROJECT: 1-17113
DESIGNED: TKK / BAA
DRAWN: BAA / TLC
CHECKED: CRP
APPROVED: TKK
DATE: FEBRUARY 8, 2018

MONTANA PROFESSIONAL ENGINEER
TODD KAKHAUS
14589-PE
FEB 8, 2018

GreatWest engineering®
2501 BELT VIEW DRIVE
HELENA, MT 59601
(406)449-8627

MONTANA FISH WILDLIFE & PARKS
HELL CREEK STATE PARK
INFRASTRUCTURE IMPROVEMENTS
SEWER FORCEMAIN PLAN AND PROFILE
STA. 14+80 TO STA. 20+00

SHEET NO.
10
OF 22

F:\1-17113 Montana FWP Hell Creek Campground Renovations\CADD 1-17113\Sheets\1-17113-10-Forcemain PP.dwg

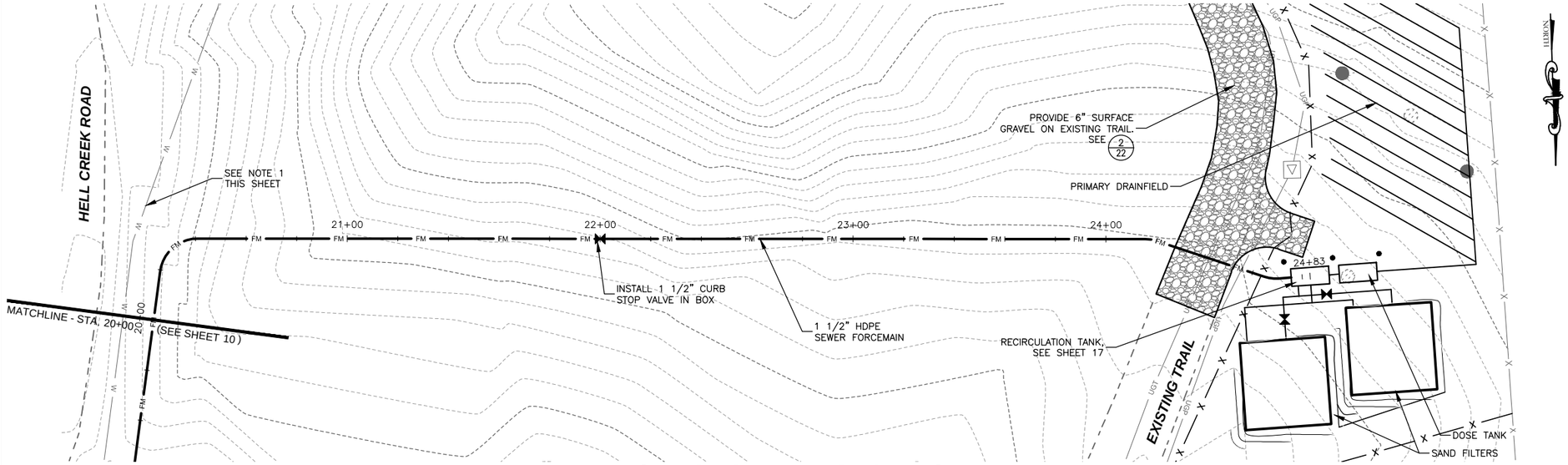

PLAN VIEW OF SEWER FORCEMAIN

0 25 50
SCALE IN FEET

NOTE:
1. CONTRACTOR TO DETERMINE LOCATION OF EXISTING WATER SERVICE AND PROVIDE 10 FEET OF HORIZONTAL SEPARATION. FIELD ADJUSTMENT OF NEW FORCEMAIN MAY BE REQUIRED.

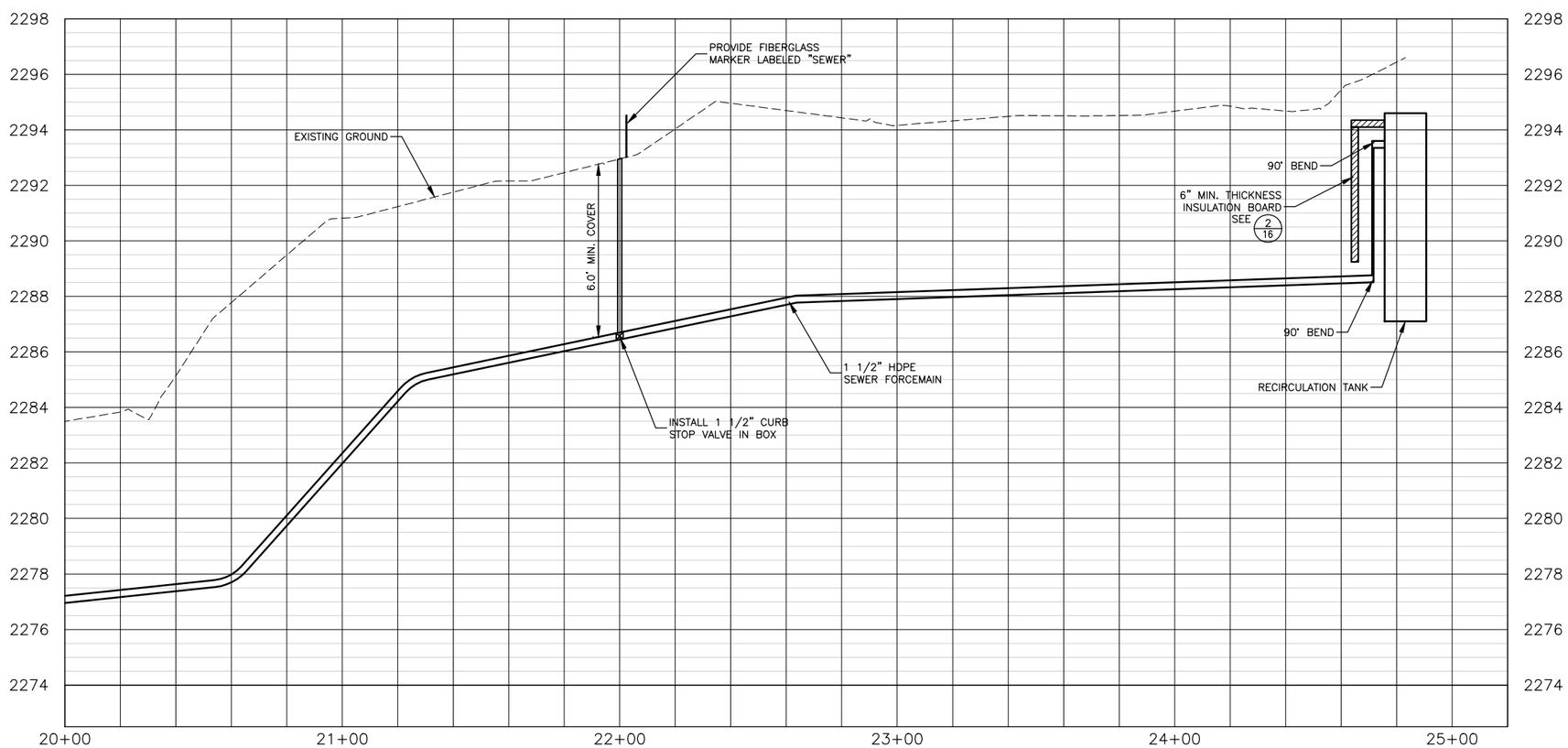

PROFILE VIEW OF SEWER FORCEMAIN - STA. 20+00 TO STA. 25+20

HORIZONTAL SCALE: 1" = 50'
VERTICAL SCALE: 1" = 5'

NO.	REVISION DESCRIPTION	BY	DATE

PROJECT: 1-17113
DESIGNED: TKK / BAA
DRAWN: BAA / TLC
CHECKED: CRP
APPROVED: TKK
DATE: FEBRUARY 8, 2018

MONTANA LICENSED PROFESSIONAL ENGINEER
TODD KAXHAUS
14589-PE
2/8/18

GreatWest engineering®
2501 BELT VIEW DRIVE
HELENA, MT 59601
(406)449-8627

MONTANA FISH WILDLIFE & PARKS
HELL CREEK STATE PARK
INFRASTRUCTURE IMPROVEMENTS
SEWER FORCEMAIN PLAN AND PROFILE
STA. 20+00 TO STA. 25+20

SHEET NO.
11
OF 22

F:\1-17113 Montana FWP Hell Creek Campground Renovations\CADD 1-17113\Sheets\1-17113-11-Forcemain PP.dwg

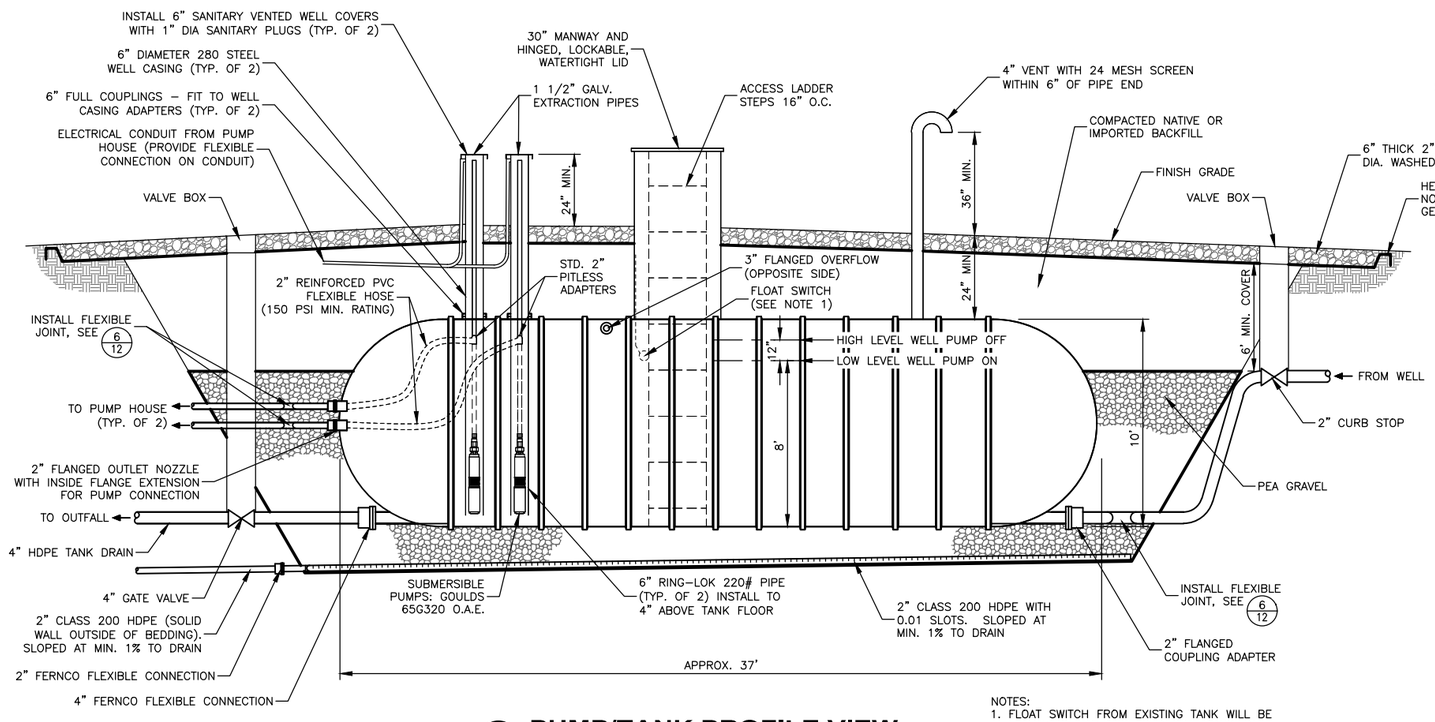

NOTES:
1. FLOAT SWITCH FROM EXISTING TANK WILL BE SALVAGED AND REUSED IN NEW TANK. ALL WIRE SPLICES CONNECTIONS SHALL BE MADE IN AN ABOVE GROUND JUNCTION BOX.

1/12 PUMP/TANK PROFILE VIEW
NOT TO SCALE

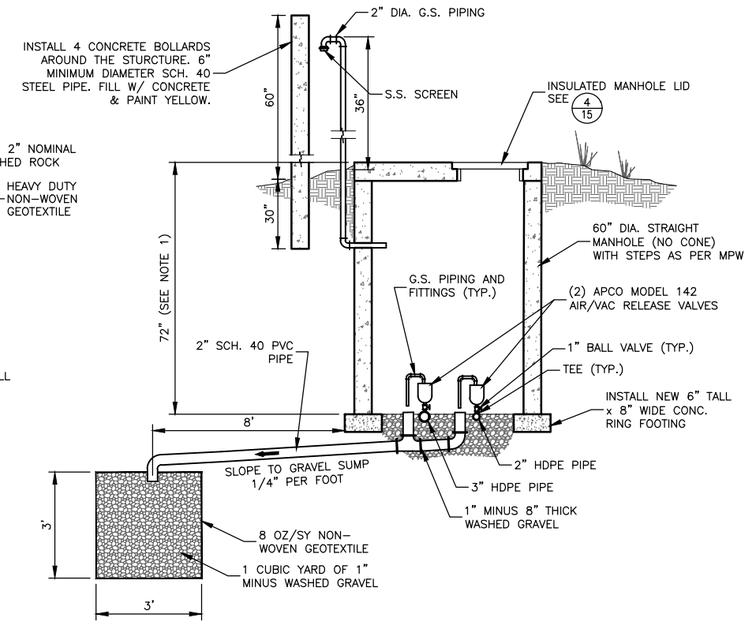

NOTES:
1. CONTRACTOR TO LOCATE AND POTHOLE EXISTING WATER PIPING PRIOR TO SUBMITTING/ORDERING VAULT. NEW VAULT HEIGHT SHALL BE EQUAL TO THE EXISTING BURY DEPTH OF THE EXISTING 2-INCH AND 3-INCH WATER LINES OR 72" WHICHEVER IS LESS.

4/12 AIR/VAC RELEASE VALVE VAULT
NOT TO SCALE

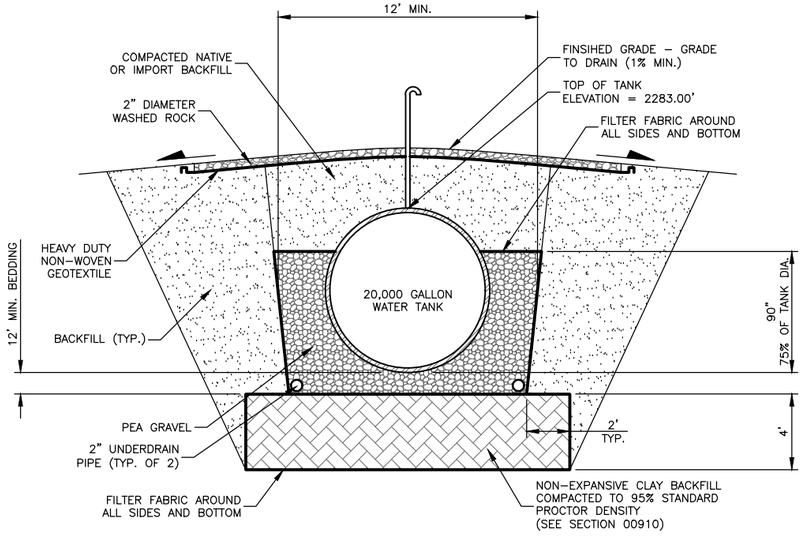

NOTES:
1. INSTALL A LAYER OF FILTER FABRIC OVER PEA GRAVEL & SOIL BACKFILL MATERIALS. OVERLAP ALL JOINTS IN THE FILTER FABRIC 6 TO 12 INCHES. LAP ALL FABRIC UP ONTO THE TANK AND EXCAVATION SURFACE A MINIMUM OF 12 INCHES.
2. COMPACT SAND OR SOIL TO ACHIEVE A MINIMUM 95% STANDARD PROCTOR DENSITY.
3. ONLY LIGHT, VIBRATORY HAND COMPACTORS PERMITTED OVER THE TOP OF THE TANK
4. TANKS SHALL BE INSTALLED PER MANUFACTURERS RECOMMENDATIONS.

2/12 STORAGE TANK SECTION VIEW
NOT TO SCALE

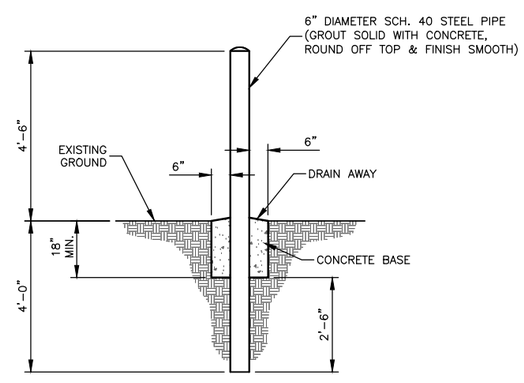

NOTE: PAINT ALL EXPOSED STEEL DARK BROWN PER FWP.

3/12 BOLLARD DETAIL
NOT TO SCALE

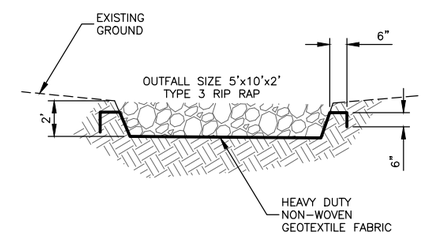

5/12 OUTFALL TYPICAL SECTION
NOT TO SCALE

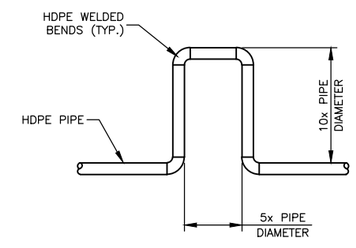

NOTE: INSTALL JOINTS LAYING FLAT.

PLAN VIEW

6/12 TYPICAL HDPE PIPE FLEXIBLE JOINT
NOT TO SCALE

NO.	REVISION DESCRIPTION	BY	DATE

PROJECT: 1-17113
DESIGNED: TKK / BAA
DRAWN: BAA / TLC
CHECKED: CRP
APPROVED: TKK
DATE: FEBRUARY 8, 2018

MONTANA LICENSED PROFESSIONAL ENGINEER TODD KRAUS No. 14589 PE

GreatWest engineering©
2501 BELT VIEW DRIVE
HELENA, MT 59601
(406)449-8627

MONTANA FISH WILDLIFE & PARKS
HELL CREEK STATE PARK
INFRASTRUCTURE IMPROVEMENTS
WATER TANK DETAILS

SHEET NO.
12
OF 22

F:\1-17113 Montana FWP Hell Creek Campground Renovations\CADD 1-17113\Sheets\1-17113-12-Water Tank Details.dwg

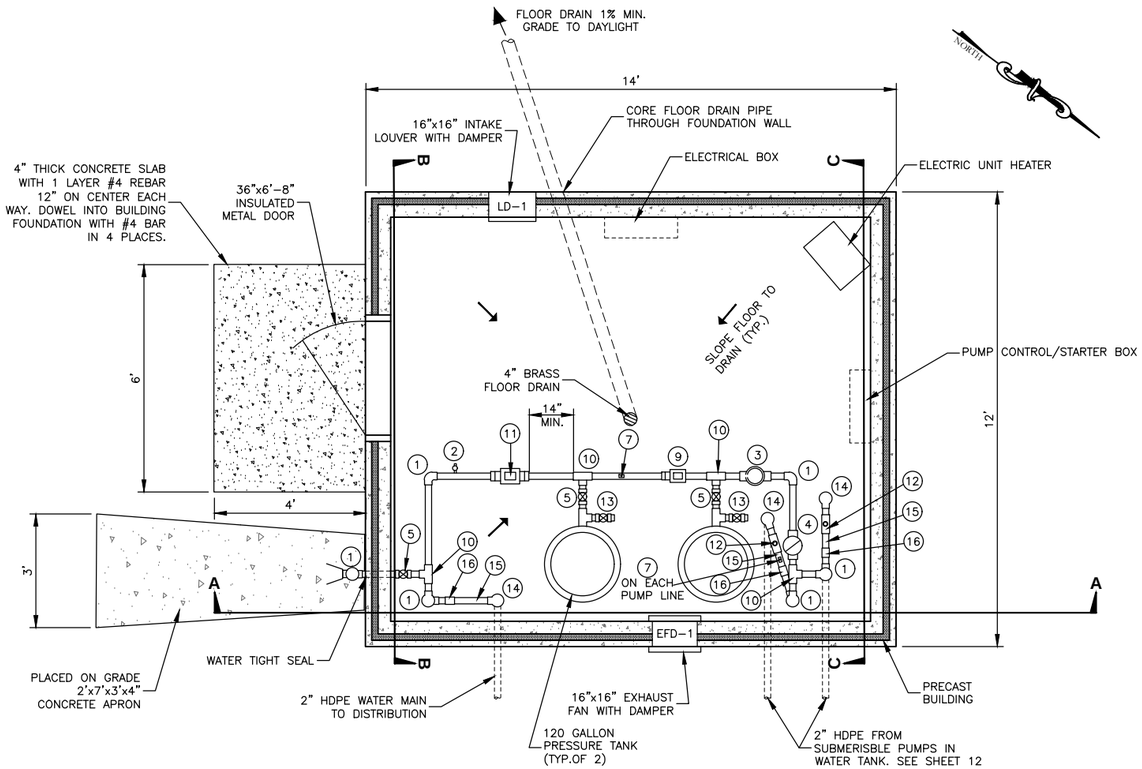

1/13 **BUILDING FLOOR PLAN**
SCALE: 1/4" = 1'-0"

PIPING KEY

1. 2" COPPER 90° BEND
2. SMOOTH NOSED SAMPLE TAP
3. COMBINATION AIR/VACUUM VALVE WITH COPPER PIPING DIRECTING DISCHARGE TOWARD FLOOR DRAIN.
4. 2" CHECK VALVE
5. 2" BALL VALVE
6. PIPE SUPPORTS (LOCATIONS MAY VARY)
7. PRESSURE GAUGE (0-200psi RANGE)
8. HOSE BIB
9. PRESSURE SENSOR
10. 2" COPPER TEE
11. FLOW METER (BADGER MAGNETOFLOW OR APRV. EQUAL) PROVIDE A MIN. 14" STRAIGHT LENGTH PIPE UPSTREAM. SHALL MEASURE FLOW RATE AND TOTALIZE.
12. 2"x2"x1" HDPE TEE WITH PLUG (FOR AIR BLOW OUT, TEE TO FACE UP)
13. 2" TEE WITH BALL VALVE TO DRAIN TANKS
14. 2" HDPE 90° BEND
15. 2" HDPE PIPE
16. 2" TRANSITION COUPLING HDPE TO COPPER

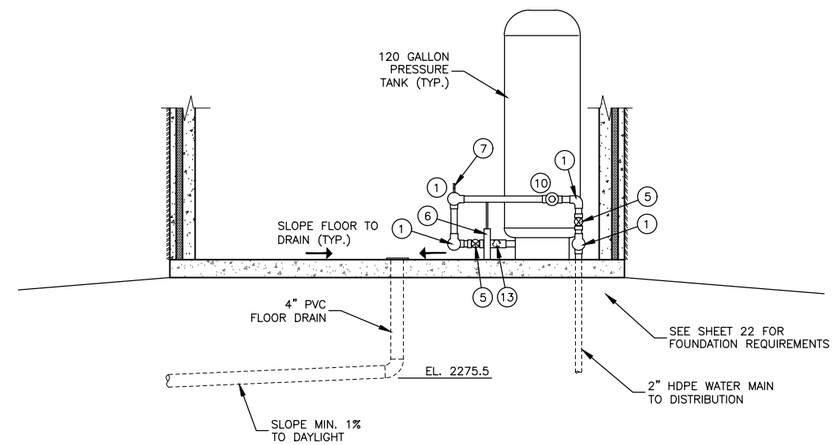

BUILDING SECTION B-B
SCALE: 1/4" = 1'-0"

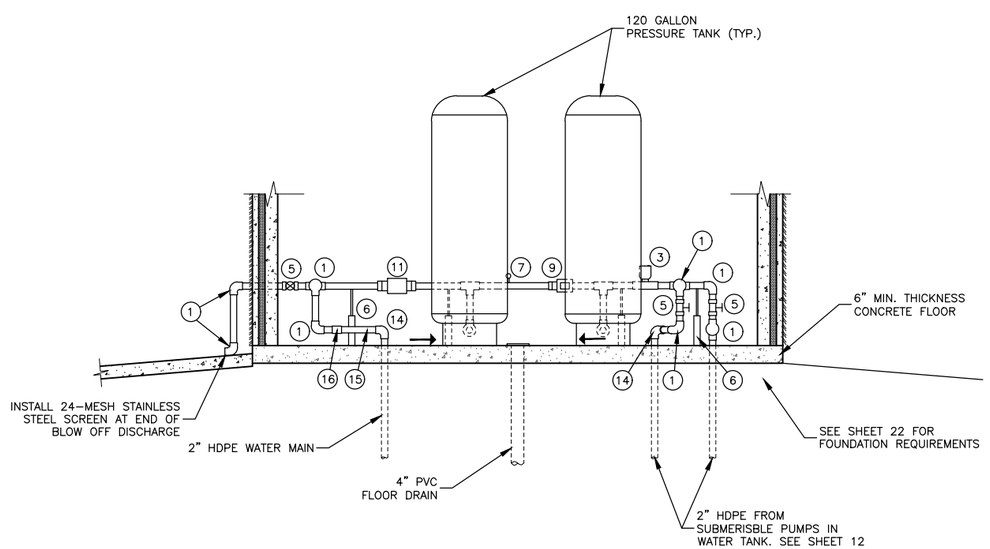

BUILDING SECTION A-A
SCALE: 1/4" = 1'-0"

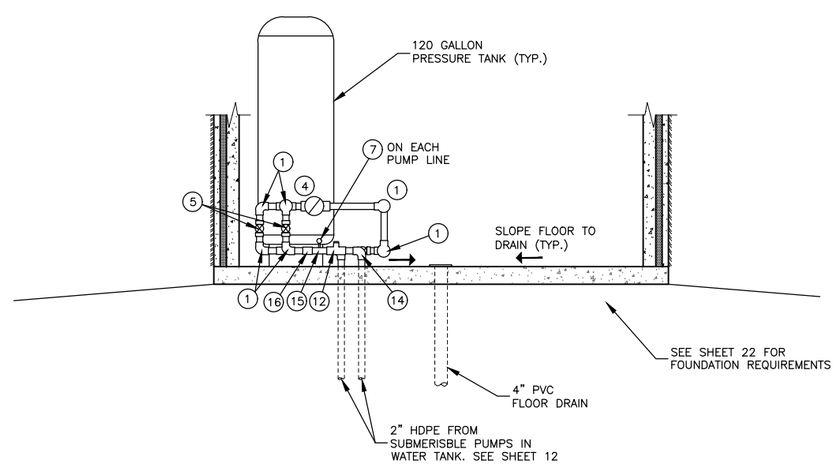

BUILDING SECTION C-C
SCALE: 1/4" = 1'-0"

NO.	REVISION DESCRIPTION	BY	DATE

PROJECT: 1-17113
DESIGNED: TKK / BAA
DRAWN: BAA / TLC
CHECKED: CRP
APPROVED: TKK
DATE: FEBRUARY 8, 2018

TODD KAHNAUS PE 14589 PROFESSIONAL ENGINEER MONTANA

GreatWest engineering©
2501 BELT VIEW DRIVE
HELENA, MT 59601
(406)449-8627

MONTANA FISH WILDLIFE & PARKS
HELL CREEK STATE PARK
INFRASTRUCTURE IMPROVEMENTS
WATER PIPING DETAILS

SHEET NO.
13
OF 22

F:\1-17113 Montana FWP Hell Creek Campground Renovations\CADD 1-17113\Sheets\1-17113-13-Water Piping Details.dwg

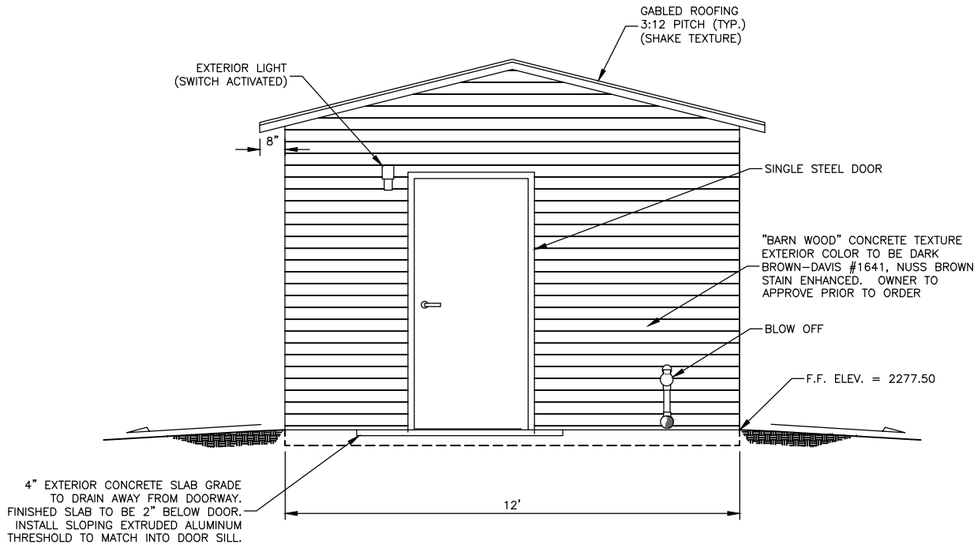

NOTE:
1. PROVIDE ROUGH OPENINGS AS REQUIRED TO ACCEPT MECHANICAL AND ELECTRICAL EQUIPMENT THROUGH FLOOR AND WALLS. CONTRACTOR TO CONFIRM OPENING SIZES ARE APPROPRIATE.
2. COLORS AND TEXTURE FOR BUILDING TO BE APPROVED BY THE OWNER PRIOR TO FABRICATION.

1/14 PUMP BUILDING - SOUTHEAST (FRONT) ELEVATION

1/4" = 1'

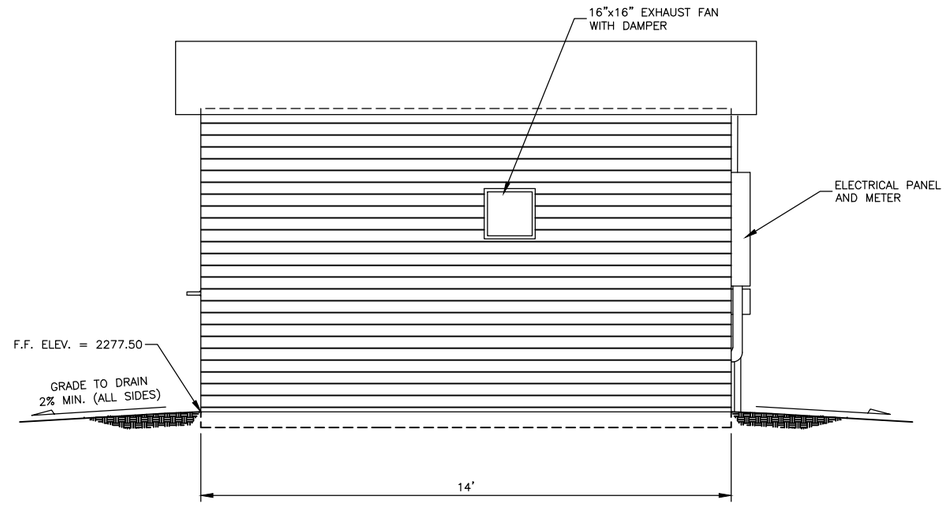

2/14 PUMP BUILDING - NORTHEAST (LEFT) ELEVATION

1/4" = 1'

NOTE:
1. SEE SHEET 22 FOR BUILDING FOUNDATION PLANS.

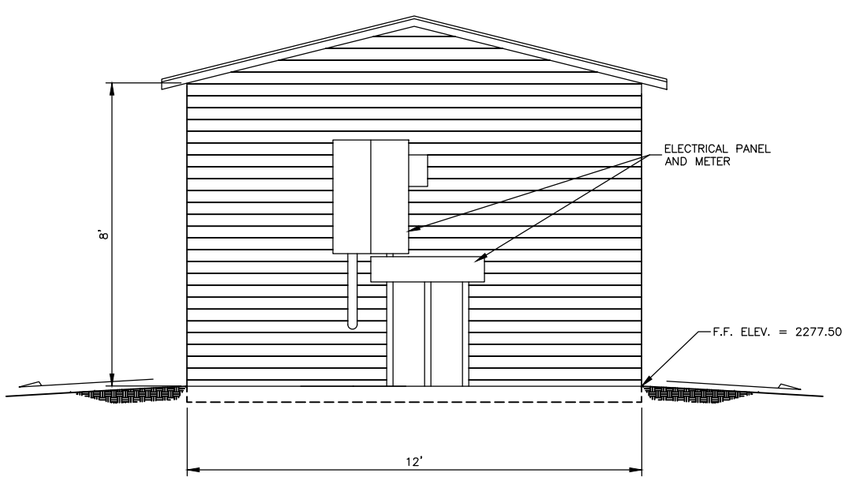

3/14 PUMP BUILDING - NORTHWEST (BACK) ELEVATION

1/4" = 1'

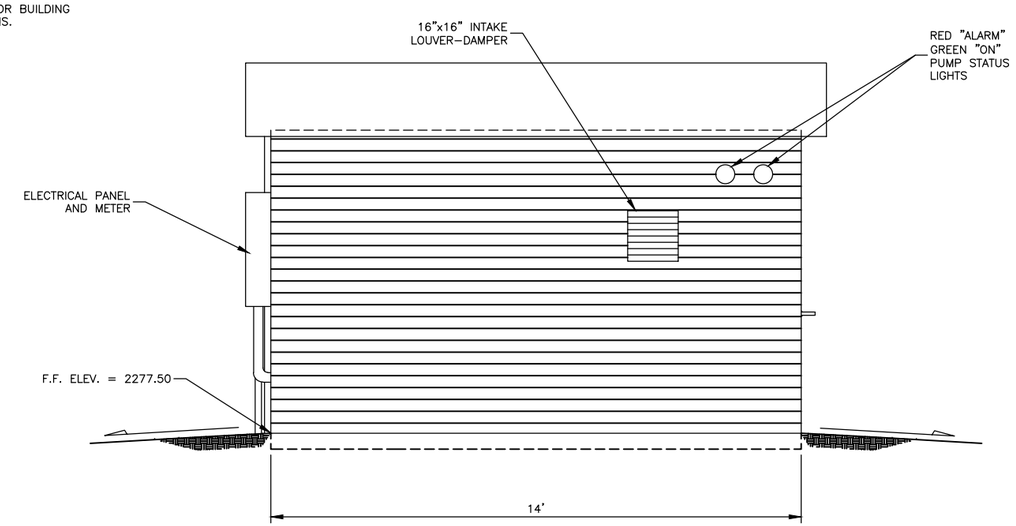

4/14 PUMP BUILDING - SOUTHWEST (RIGHT) ELEVATION

1/4" = 1'

NO.	REVISION DESCRIPTION	BY	DATE

PROJECT: 1-17113
DESIGNED: TKK / BAA
DRAWN: BAA / TLC
CHECKED: CRP
APPROVED: TKK
DATE: FEBRUARY 8, 2018

MONTANA LICENSED PROFESSIONAL ENGINEER TODD KAYHAUS No. 14589 PE

GreatWest engineering®
2501 BELT VIEW DRIVE
HELENA, MT 59601
(406)449-8627

MONTANA FISH WILDLIFE & PARKS
HELL CREEK STATE PARK
INFRASTRUCTURE IMPROVEMENTS
PUMP BUILDING ELEVATIONS

SHEET NO.
14
OF 22

F:\1-17113 Montana FWP Hell Creek Campground Renovations\CADD 1-17113\Sheets\1-17113-14-Building Elevations.dwg

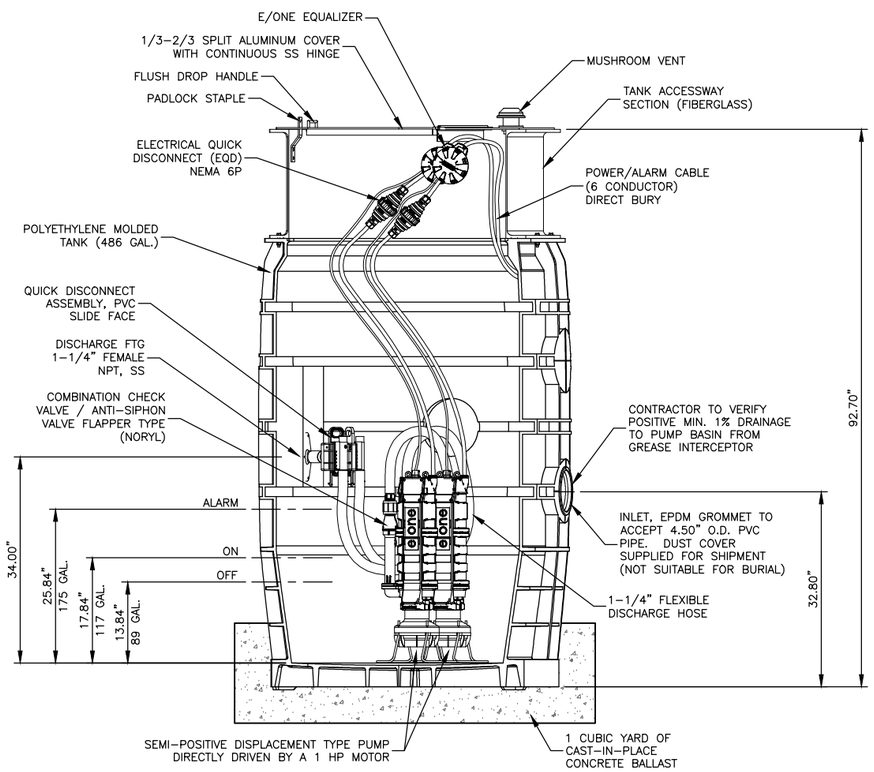

1/15 E-ONE PUMP STATION DETAIL

NOT TO SCALE

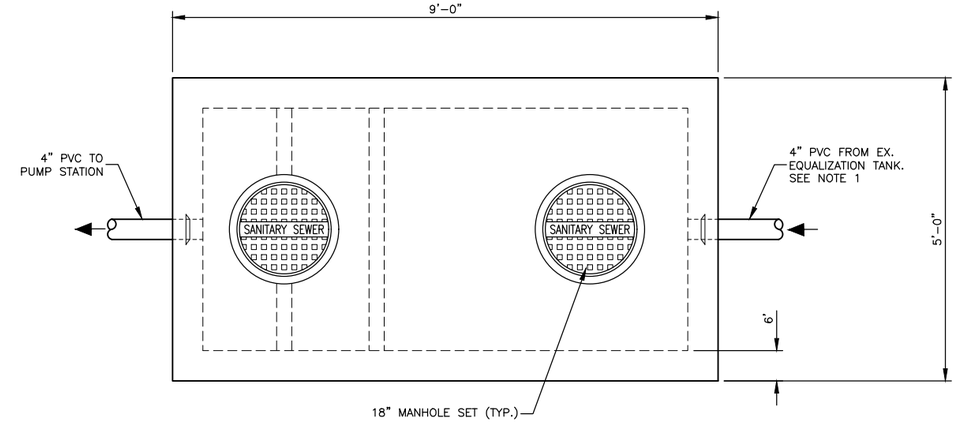

PLAN VIEW

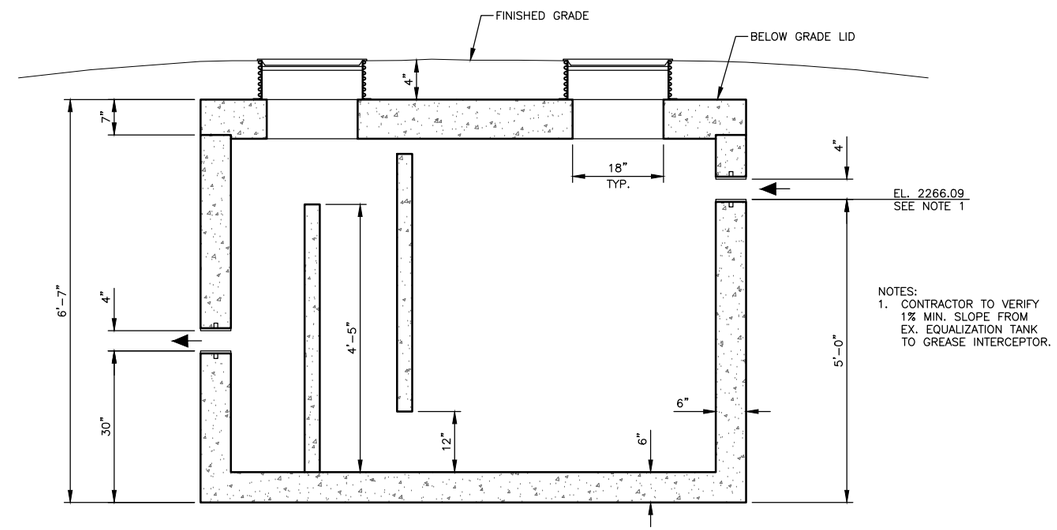

NOTES:
1. CONTRACTOR TO VERIFY 1% MIN. SLOPE FROM EX. EQUALIZATION TANK TO GREASE INTERCEPTOR.

SECTION VIEW

2/15 GREASE INTERCEPTOR DETAIL

NOT TO SCALE

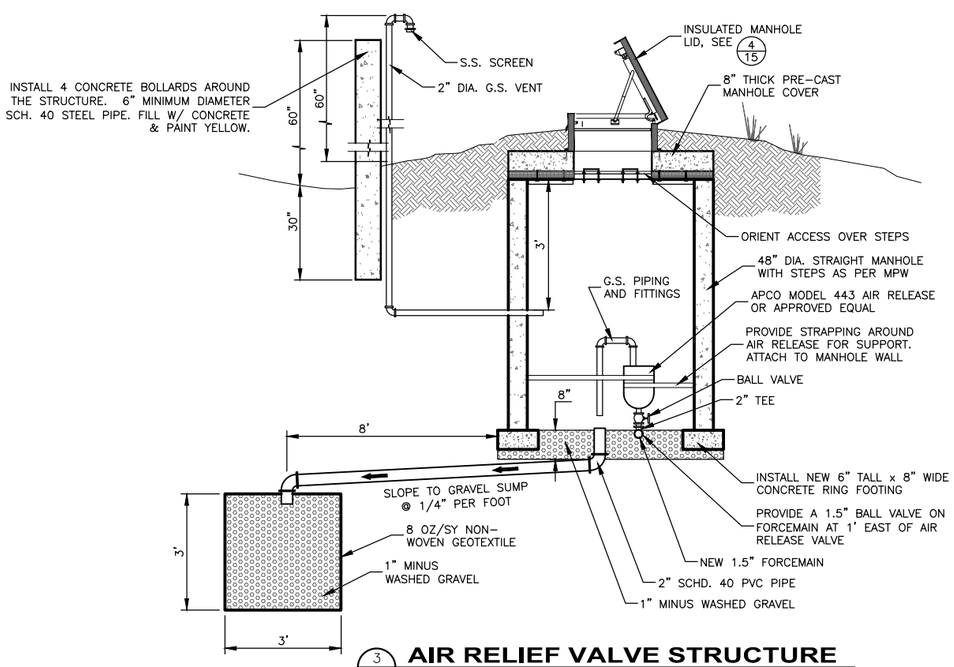

3/15 AIR RELIEF VALVE STRUCTURE

NOT TO SCALE

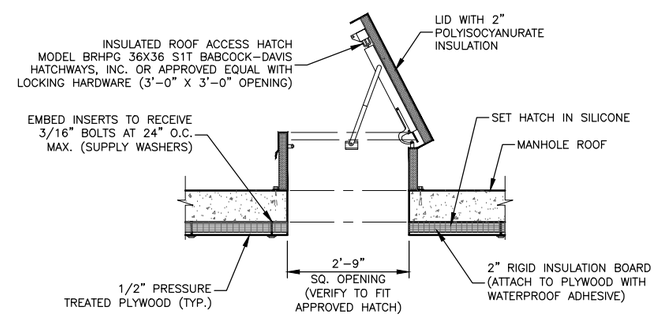

4/15 INSULATED MANHOLE LID DETAIL

NOT TO SCALE

NO.	REVISION DESCRIPTION	BY	DATE

PROJECT: 1-17113
DESIGNED: TKK / BAA
DRAWN: BAA / TLC
CHECKED: CRP
APPROVED: TKK
DATE: FEBRUARY 8, 2018

GreatWest engineering©
2501 BELT VIEW DRIVE
HELENA, MT 59601
(406)449-8627

MONTANA FISH WILDLIFE & PARKS
HELL CREEK STATE PARK
INFRASTRUCTURE IMPROVEMENTS

SEWER DETAILS

SHEET NO.
15
OF 22

F:\1–17113 Montana FWP Hell Creek Campground Renovations\CADD 1–17113\Sheets\1–17113–15–Sewer Details.dwg

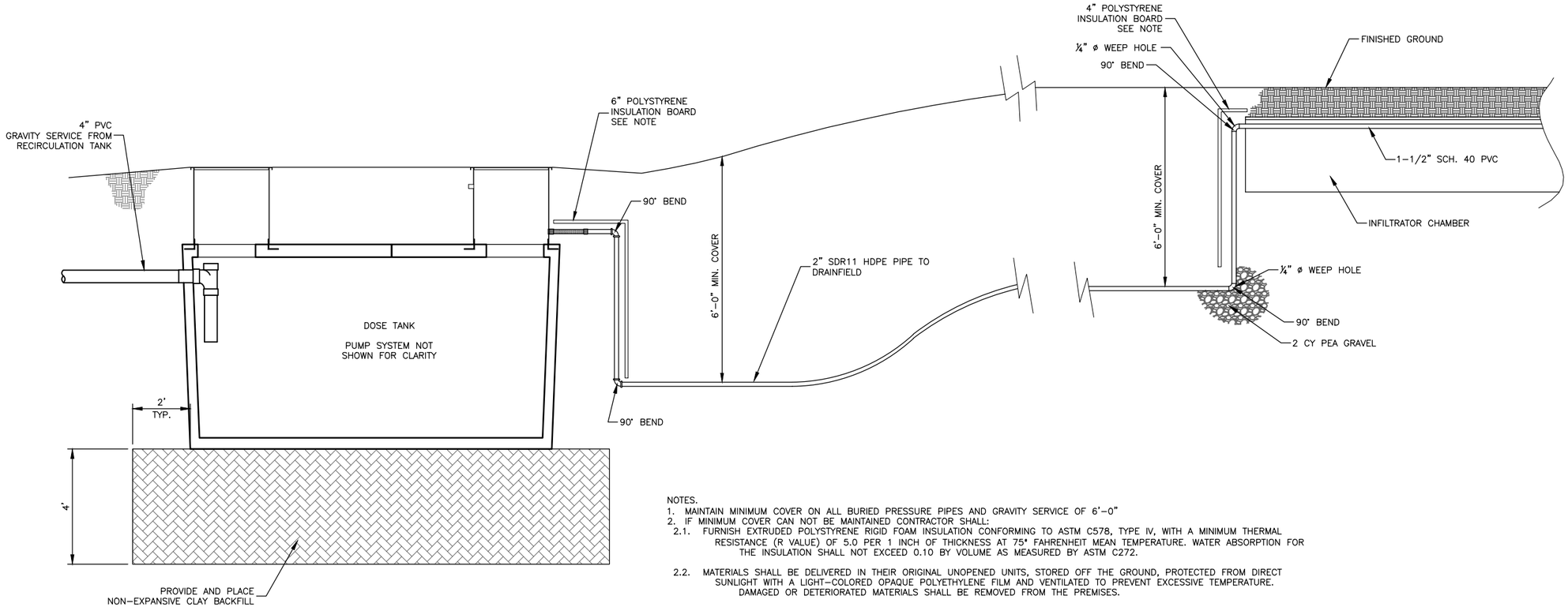

NOTES.
1. MAINTAIN MINIMUM COVER ON ALL BURIED PRESSURE PIPES AND GRAVITY SERVICE OF 6'-0"
2. IF MINIMUM COVER CAN NOT BE MAINTAINED CONTRACTOR SHALL:
2.1. FURNISH EXTRUDED POLYSTYRENE RIGID FOAM INSULATION CONFORMING TO ASTM C578, TYPE IV, WITH A MINIMUM THERMAL RESISTANCE (R VALUE) OF 5.0 PER 1 INCH OF THICKNESS AT 75° FAHRENHEIT MEAN TEMPERATURE. WATER ABSORPTION FOR THE INSULATION SHALL NOT EXCEED 0.10 BY VOLUME AS MEASURED BY ASTM C272.

2.2. MATERIALS SHALL BE DELIVERED IN THEIR ORIGINAL UNOPENED UNITS, STORED OFF THE GROUND, PROTECTED FROM DIRECT SUNLIGHT WITH A LIGHT-COLORED OPAQUE POLYETHYLENE FILM AND VENTILATED TO PREVENT EXCESSIVE TEMPERATURE. DAMAGED OR DETERIORATED MATERIALS SHALL BE REMOVED FROM THE PREMISES.

2.3. FURNISH EXTRUDED POLYSTYRENE RIGID FOAM INSULATION AS MANUFACTURED BY DOW CHEMICAL COMPANY (STYROFOAM FREEZERMATE), OWENS-CORNING (FOAMULAR 250), OR AN APPROVED EQUIVALENT.

1/16 GENERAL DOSE PIPE PROFILE
NOT TO SCALE

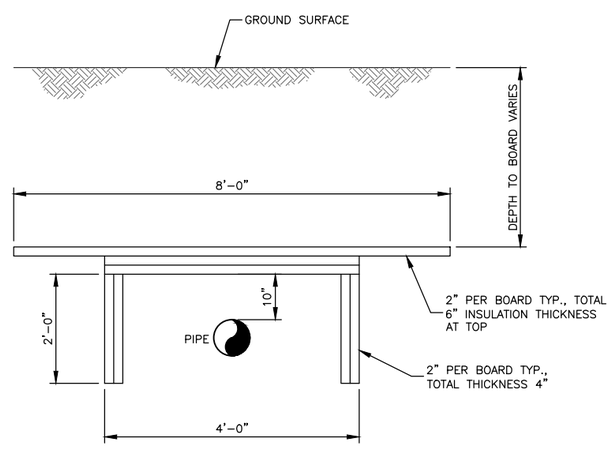

NOTES:
1. PROVIDE INSULATION BOARDS OF SP FORMULAR 250 EXTRUDED POLYSTYRENE FOAM INSULATION, OR APPROVED EQUIVALENT.
2. STAGGER LAYERS SO THAT EACH JOINT OF INSULATION BOARD IS COUNTERED BY AT LEAST 1 FT. OF JOINT FREE BOARD EITHER ABOVE OR BELOW (IN FRONT OR BEHIND) THE JOINT IN EACH DIRECTION.
3. TAPE SEAL 8 FOOT EDGE OF TOP INSULATION BOARD TO EDGE OF BUILDING.

2/16 PIPE INSULATION DETAIL
NOT TO SCALE

NO.	REVISION DESCRIPTION	BY	DATE

PROJECT: 1-17113
DESIGNED: TKK / BAA
DRAWN: BAA / TLC
CHECKED: CRP
APPROVED: TKK
DATE: FEBRUARY 8, 2018

MONTANA LICENSED PROFESSIONAL ENGINEER
TODD KAKHAUS
14589-PE
STATE OF MONTANA

GreatWest engineering®
2501 BELT VIEW DRIVE
HELENA, MT 59601
(406)449-8627

MONTANA FISH WILDLIFE & PARKS
HELL CREEK STATE PARK
INFRASTRUCTURE IMPROVEMENTS
SEWER DETAILS

SHEET NO.
16
OF 22

F:\1-17113 Montana FWP Hell Creek Campground Renovations\CADD 1-17113\Sheets\1-17113-16-Sewer Details.dwg

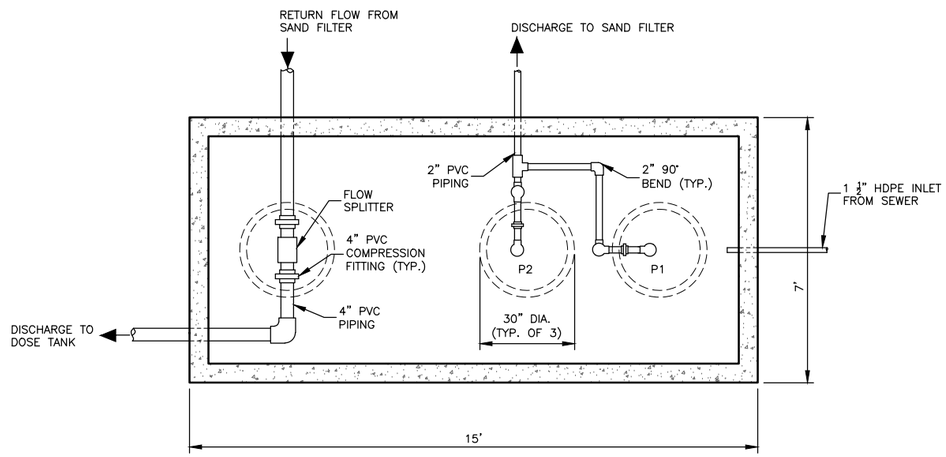

1/17 3,000 GALLON RECIRCULATION TANK PLAN VIEW

1/4"=1'

NOTES:
1. ALL WIRE SPLICES SHALL BE CONTAINED IN A PEDESTAL TYPE JUNCTION BOX LOCATED NEXT TO TANK.
2. FLOATS SHALL BE INSTALLED IN A MANNER THAT MINIMIZES WIRE TANGLING DURING MAINTENANCE.

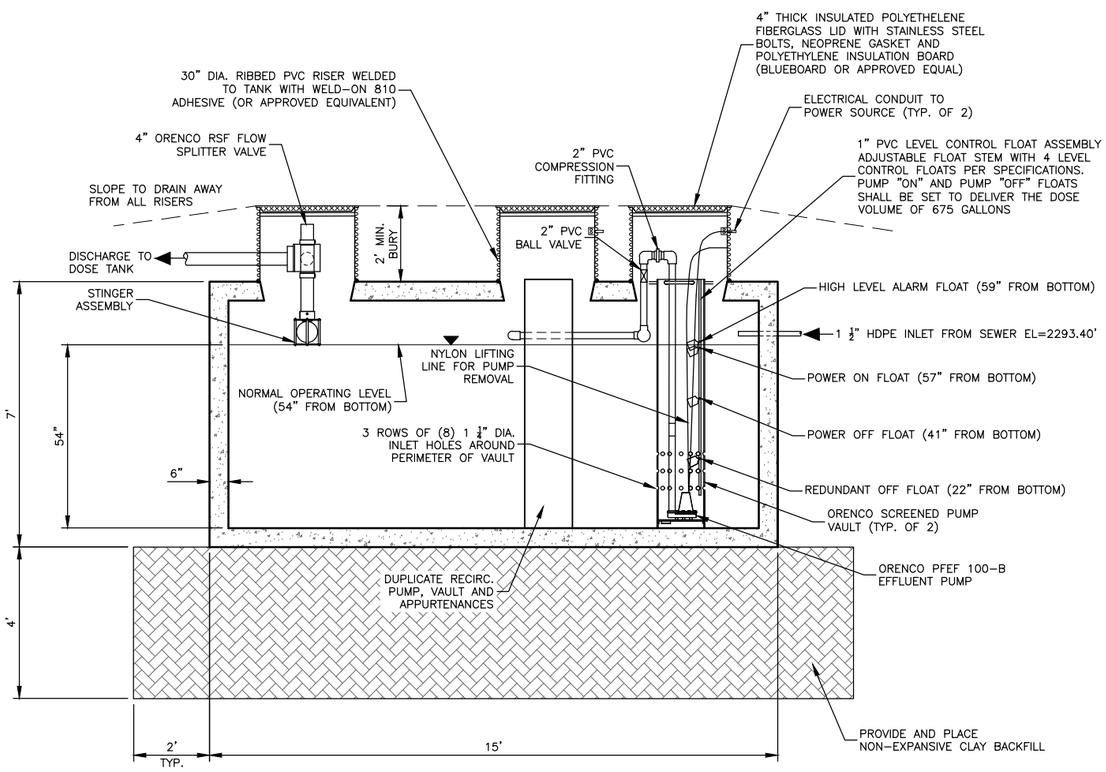

2/17 3,000 GALLON RECIRCULATION TANK PROFILE VIEW

1/4"=1'

NO.	REVISION DESCRIPTION	BY	DATE

PROJECT: 1-17113
DESIGNED: TKK / BAA
DRAWN: BAA / TLC
CHECKED: CRP
APPROVED: TKK
DATE: FEBRUARY 8, 2018

MONTANA LICENSED PROFESSIONAL ENGINEER TODD KAYHAUS No. 14589 PE

GreatWest engineering©
2501 BELT VIEW DRIVE
HELENA, MT 59601
(406)449-8627

MONTANA FISH WILDLIFE & PARKS
HELL CREEK STATE PARK
INFRASTRUCTURE IMPROVEMENTS
RECIRCULATION TANK DETAILS

SHEET NO.
17
OF 22

F:\1-17113 Montana FWP Hell Creek Campground Renovations\CADD 1-17113\Sheets\1-17113-17-Recirculation Tank Details.dwg

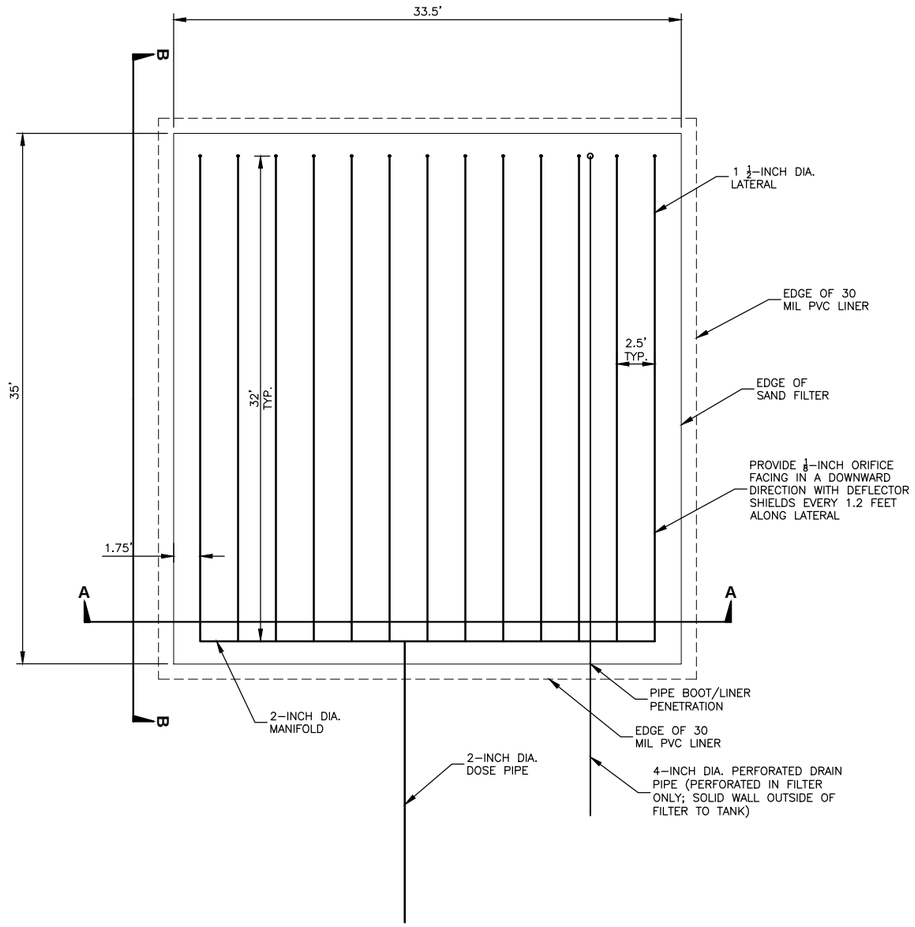

1/18 **SAND FILTER PLAN VIEW**
SCALE 1" = 10'

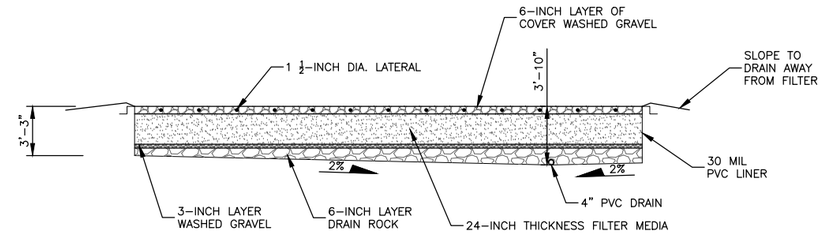

SAND FILTER SECTION A-A
SCALE: 1" = 10'

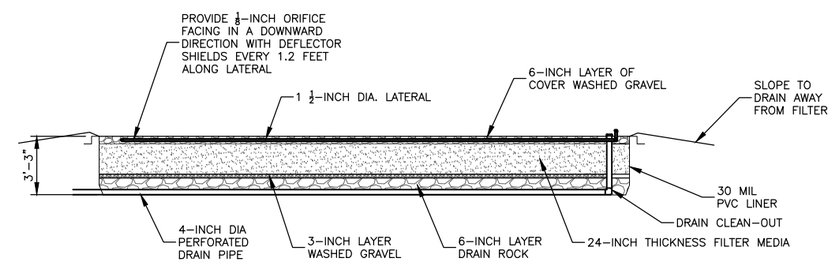

SAND FILTER SECTION B-B
SCALE: 1" = 10'

NO.	REVISION DESCRIPTION	BY	DATE

PROJECT: 1-17113
DESIGNED: TKK / BAA
DRAWN: BAA / TLC
CHECKED: CRP
APPROVED: TKK
DATE: FEBRUARY 8, 2018

TODD KAYHAUS No. 14589 PE PROFESSIONAL ENGINEER MONTANA

GreatWest engineering©
2501 BELT VIEW DRIVE
HELENA, MT 59601
(406)449-8627

MONTANA FISH WILDLIFE & PARKS
HELL CREEK STATE PARK
INFRASTRUCTURE IMPROVEMENTS
SAND FILTER DETAILS

SHEET NO.
18
OF 22

F:\1-17113 Montana FWP Hell Creek Campground Renovations\CADD 1-17113\Sheets\1-17113-18-Sand Filter Details.dwg

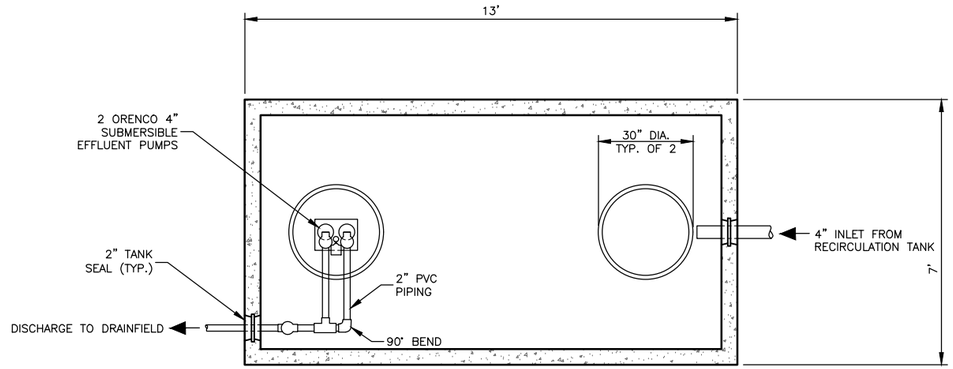

1/19 2,500 GALLON DOSING TANK PLAN VIEW

SCALE: 1/4" = 1'-0"

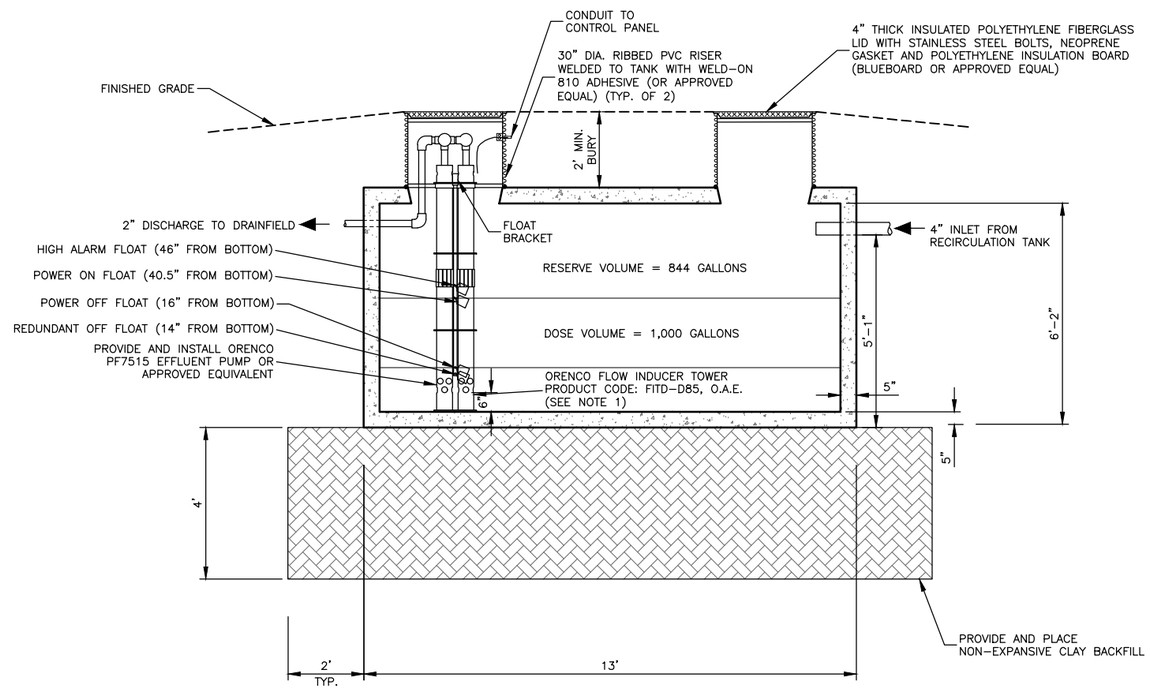

NOTES:
1. CONTRACTOR TO VERIFY PROPER PUMP SIZE PRIOR TO SUBMITTAL/ORDERING.

2/19 2,500 GALLON DOSING TANK PROFILE VIEW

SCALE: 1/4" = 1'-0"

NO.	REVISION DESCRIPTION	BY	DATE

PROJECT: 1-17113
DESIGNED: TKK / BAA
DRAWN: BAA / TLC
CHECKED: CRP
APPROVED: TKK
DATE: FEBRUARY 8, 2018

TODD KAYHAUS HOFFMAN
14589-PE
PROFESSIONAL ENGINEER
MONTANA

GreatWest engineering®
2501 BELT VIEW DRIVE
HELENA, MT 59601
(406)449-8627

MONTANA FISH WILDLIFE & PARKS
HELL CREEK STATE PARK
INFRASTRUCTURE IMPROVEMENTS

DOSE TANK DETAILS

SHEET NO.
19
OF 22

F:\1-17113 Montana FWP Hell Creek Campground Renovations\CADD 1-17113\Sheets\1-17113-19-Dose Tank Details.dwg

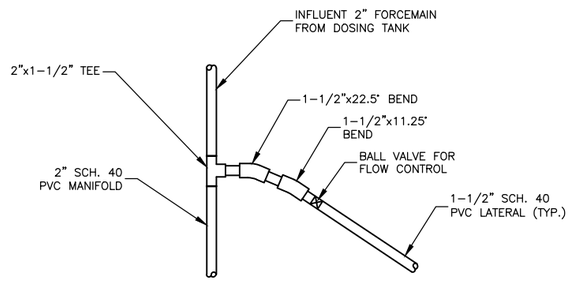

PRESSURE DISTRIBUTED LATERALS:
1. PLACE 18" LONG #4 REBAR AT EACH CORNER OF THE DRAINFIELD.
2. LATERALS AND TRENCHES SHALL BE LEVEL.
3. TRANSITION CONNECTIONS OF SEWER MATERIALS SHALL BE MADE BY ADAPTER FITTINGS OR ONE-PIECE MOLDED RUBBER COUPLINGS WITH APPROPRIATE BUSHINGS FOR THE RESPECTIVE MATERIALS. ALL FITTINGS MUST BE AT LEAST OF EQUIVALENT DURABILITY AND STRENGTH OF THE PIPE ITSELF.

1/20 MANIFOLD/LATERAL CONNECTION

SCALE: 3/8" = 1'-0"

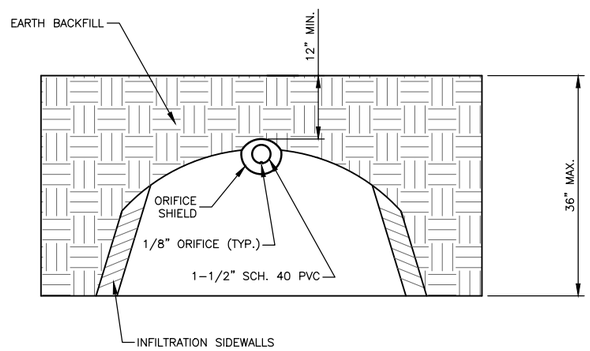

NOTE: INFILTRATORS MUST BE FOR 36" WIDE TRENCH AND INSTALLED ACCORDING TO MANUFACTURERS RECOMMENDATIONS

2/20 DOSED 36" INFILTRATOR CHAMBER

NOT TO SCALE

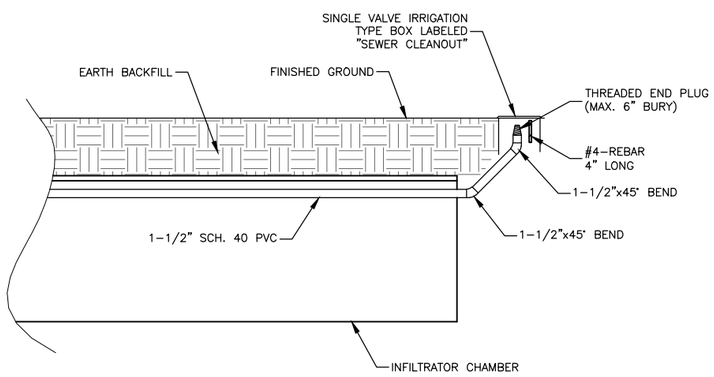

CLEANOUT NOTES:
1. CLEANOUTS MUST BE PROVIDED AT THE END OF EVERY LATERAL.
2. CLEANOUTS SHALL BE MARKED WITH A 4" LONG #4 REBAR.

3/20 LATERAL CLEANOUT DETAIL

NOT TO SCALE

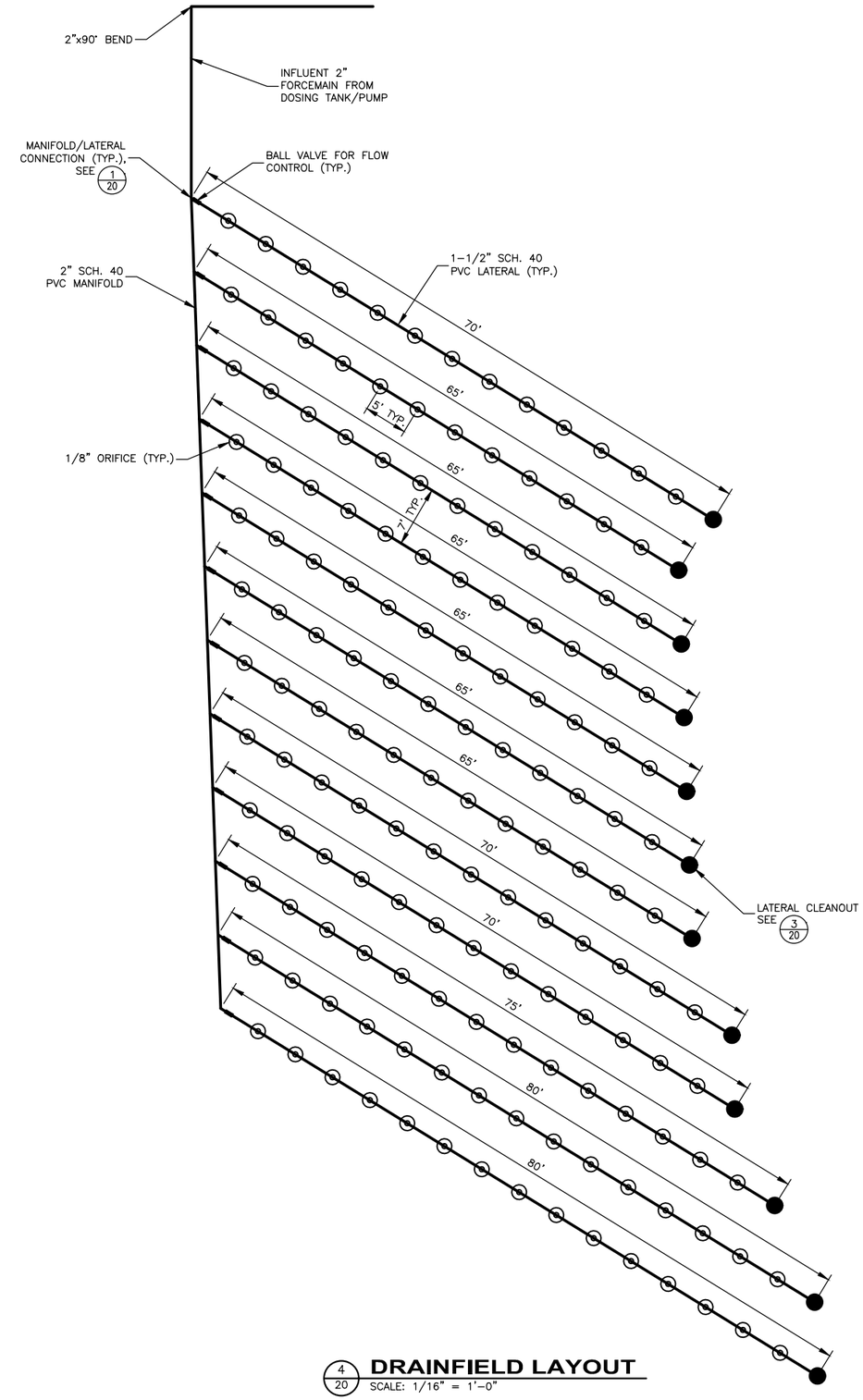

4/20 DRAINFIELD LAYOUT

SCALE: 1/16" = 1'-0"

NO.	REVISION DESCRIPTION	BY	DATE

PROJECT: 1-17113
DESIGNED: TKK / BAA
DRAWN: BAA / TLC
CHECKED: CRP
APPROVED: TKK
DATE: FEBRUARY 8, 2018

MONTANA LICENSED PROFESSIONAL ENGINEER TODD KAMMUDS No. 14589 PE

GreatWest engineering©
2501 BELT VIEW DRIVE
HELENA, MT 59601
(406)449-8627

MONTANA FISH WILDLIFE & PARKS
HELL CREEK STATE PARK
INFRASTRUCTURE IMPROVEMENTS
DRAINFIELD DETAILS

SHEET NO.
20
OF 22

F:\1-17113 Montana FWP Hell Creek Campground Renovations\CADD 1-17113\Sheets\1-17113-20-Drainfield Details.dwg

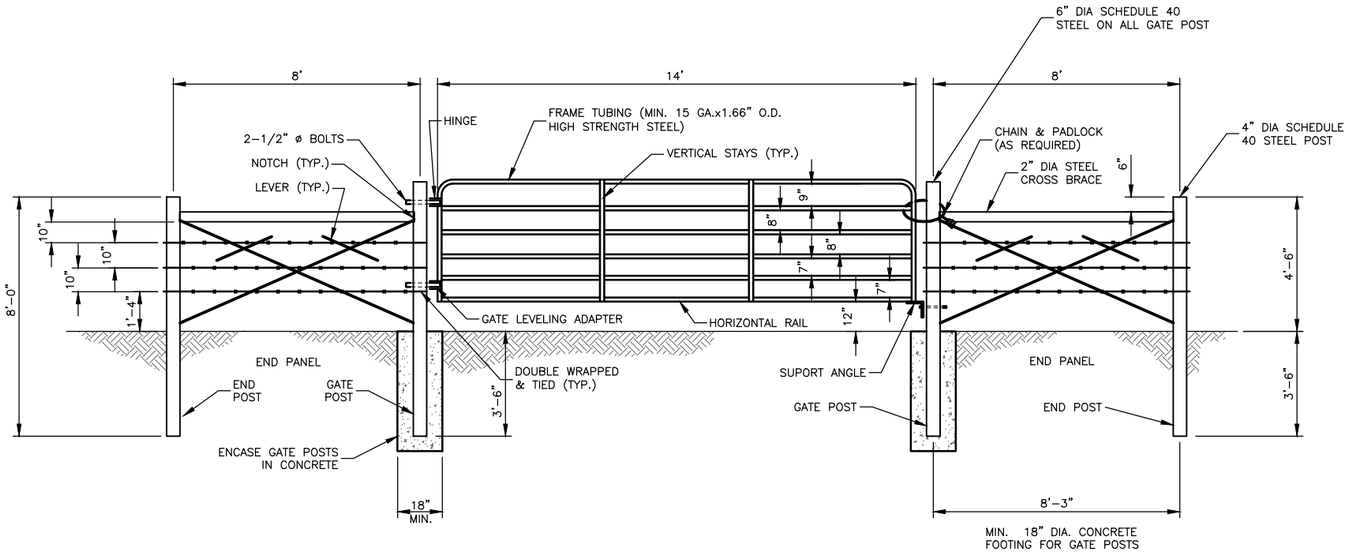

NOTES: ALL WIRE TO BE PLACED ON SIDE OF POSTS OPPOSITE FACILITY ENCLOSED EXCEPT ON CURVES; WIRE TO BE PLACED ON OUTSIDE OF CURVES, USE SINGLE END PANELS FOR STRAIGHT RUNS OF 33-330 FT., USE DOUBLE PANELS FOR RUNS OF 330-660 FT. SLOPE TOP OF CONCRETE FOOTING TO DRAIN AWAY FROM POST. REPLACE ONE STEEL LINE POST WITH A WOOD POST IN EACH RUN OF FENCE AND AT INTERVALS OF 70 FT. INSTALL WIRE STAYS MIDWAY BETWEEN LINE POST.

1/21 SWING GATE DETAIL

NOT TO SCALE

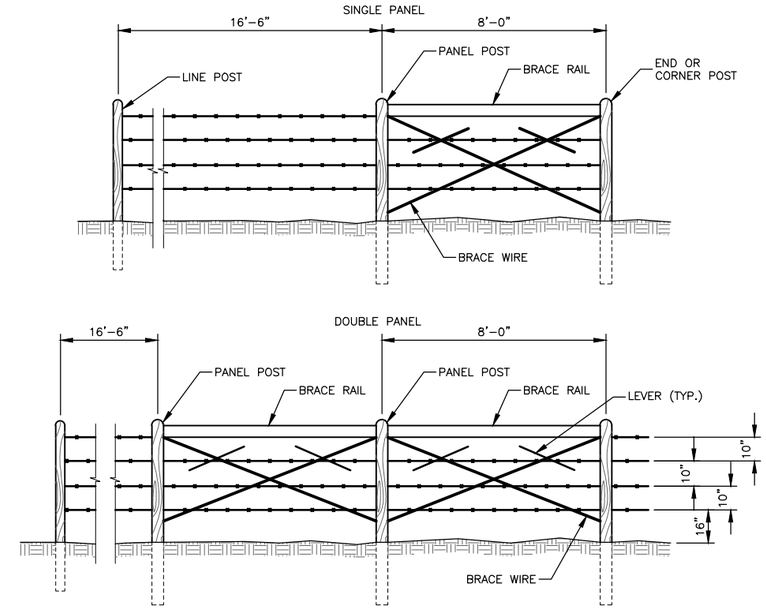

3/21 BARBED WIRE FENCE DETAIL

NOT TO SCALE

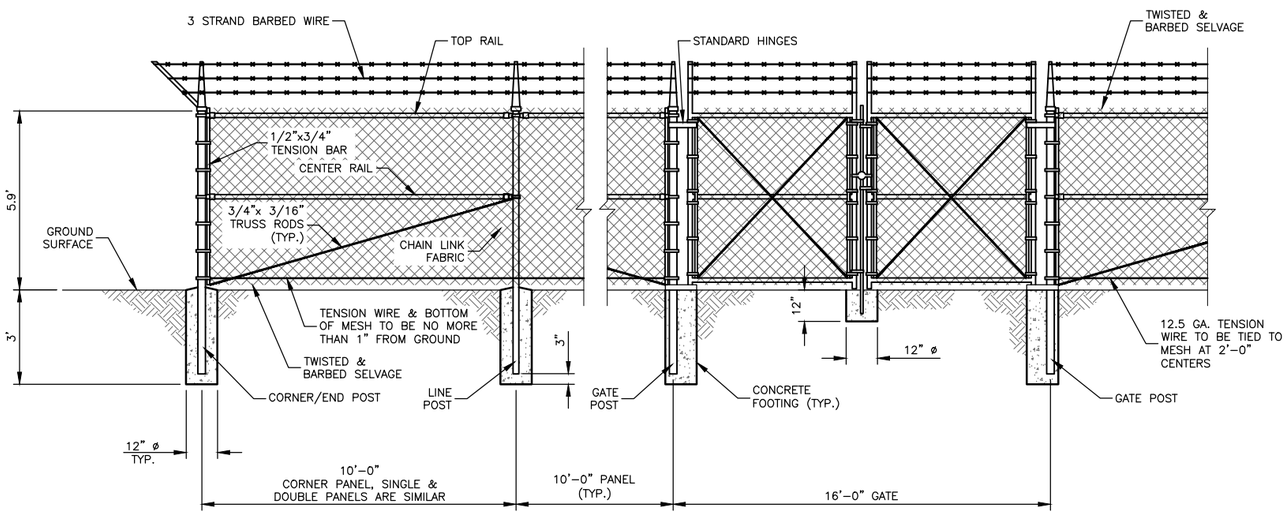

CHAIN LINK FENCE MATERIALS:

1. TOP & CENTER RAILS TO BE 1 5/8" O.D.
2. FABRIC TO BE 9 GAUGE 2" MESH.
3. CORNER POSTS TO BE 2 7/8" O.D. x 0.160" WALL THICKNESS
4. GATE POSTS TO BE 1.9" O.D. x 0.160" WALL THICKNESS.
5. LINE POSTS TO BE 1 5/8" x 2.28" LB/FT FORMED STEEL SECTION.
6. POST SPACING NOT TO EXCEED 10'-0".

CHAIN LINK FENCE NOTES:

1. PULL POST BRACING SHALL BE SAME AS CORNER BRACING.
2. A DROP BAR LOCKING DEVICE IS REQUIRED FOR DOUBLE GATE. THE DROP BAR SHALL BE ABLE TO BE INSERTED INTO THE CONCRETE BLOCK AT LEAST 6 INCHES.
3. AT LEAST ONE POST WILL BE EXTENDED 3' INTO THE GROUND FOR LIGHTNING PROTECTION.
4. CHAIN LINK MESH TO BE TIED TO TOP AND CENTER RAILS AT 2'-0" CENTERS.
5. GATE CHAIN LINK FABRIC SHALL MATCH FENCE CHAIN LINK FABRIC.
6. GATE FRAMES SHALL BE WELDED & BRACES FURNISHED AS REQUIRED.

2/21 CHAIN LINK FENCE AND GATE

NOT TO SCALE

NO.	REVISION DESCRIPTION	BY	DATE

PROJECT: 1-17113
DESIGNED: TKK / BAA
DRAWN: BAA / TLC
CHECKED: CRP
APPROVED: TKK
DATE: FEBRUARY 8, 2018

MONTANA LICENSED PROFESSIONAL ENGINEER TODD KRAUS No. 14589 PE

GreatWest engineering©
2501 BELT VIEW DRIVE
HELENA, MT 59601
(406)449-8627

MONTANA FISH WILDLIFE & PARKS
HELL CREEK STATE PARK
INFRASTRUCTURE IMPROVEMENTS

FENCING DETAILS

SHEET NO.
21
OF 22

F:\1-17113 Montana FWP Hell Creek Campground Renovations\CADD 1-17113\Sheets\1-17113-21-Fencing Details.dwg

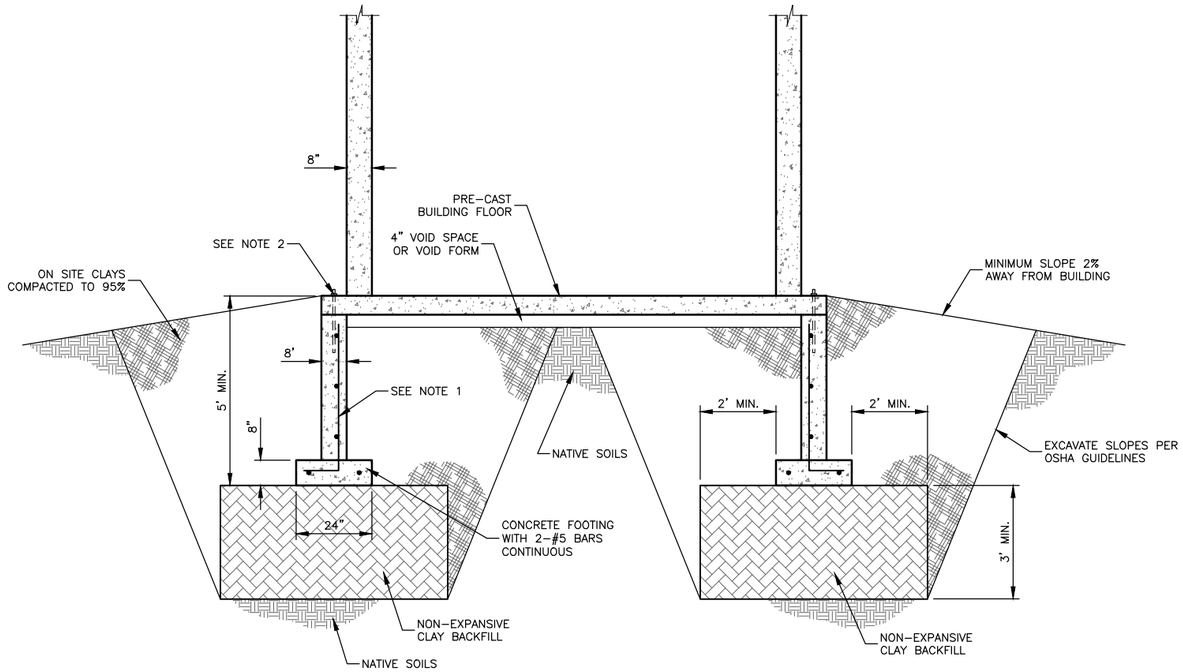

NOTES:
1. FOUNDATION WALL REINFORCING #4 AT 12" HORIZONTAL AND #4 AT 16" VERTICAL.
2. PROVIDE 16 – 1/2" DIA. HILTI ANCHORS AROUND PERIMETER OF PRECAST BUILDING ANCHORED TO FOUNDATION WALLS. PENETRATE INTO FOUNDATION WALL A MINIMUM OF 8 INCHES.
3. PRECAST FLOOR SHALL BE DESIGNED TO SPAN BUILDING WIDTH AND LENGTH.

1/22 BUILDING FOUNDATION SECTION

SCALE: 1/4" = 1'-0"

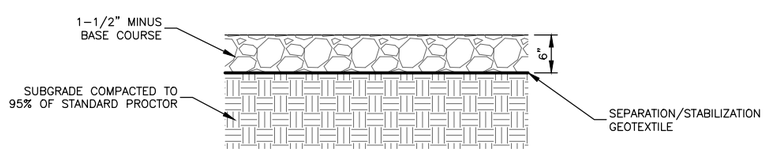

2/22 GRAVEL ROAD/PARKING SECTION

NOT TO SCALE

NO.	REVISION DESCRIPTION	BY	DATE
△			
△			
△			
△			
△			

PROJECT: 1-17113
DESIGNED: TKK / BAA
DRAWN: BAA / TLC
CHECKED: CRP
APPROVED: TKK
DATE: FEBRUARY 8, 2018

MONTANA TODD KRAUS PE 14589 PROFESSIONAL ENGINEER

GreatWest engineering®
2501 BELT VIEW DRIVE
HELENA, MT 59601
(406)449-8627

MONTANA FISH WILDLIFE & PARKS
HELL CREEK STATE PARK
INFRASTRUCTURE IMPROVEMENTS

DETAILS

SHEET NO.
22
OF 22

F:\1-17113 Montana FWP Hell Creek Campground Renovations\CADD 1-17113\Sheets\1-17113-22-Details.dwg