Elevations Table

Number	Minimum Elevation	Maximum Elevation	Area	Color
1	-20.00	-10.00	1328.08	
2	-10.00	-2.00	30259.01	
3	-2.00	-0.25	81666.31	
4	0.25	2.00	120699.52	
5	2.00	4.00	20672.58	
6	4.00	8.00	11864.08	
7	8.00	12.00	5357.79	

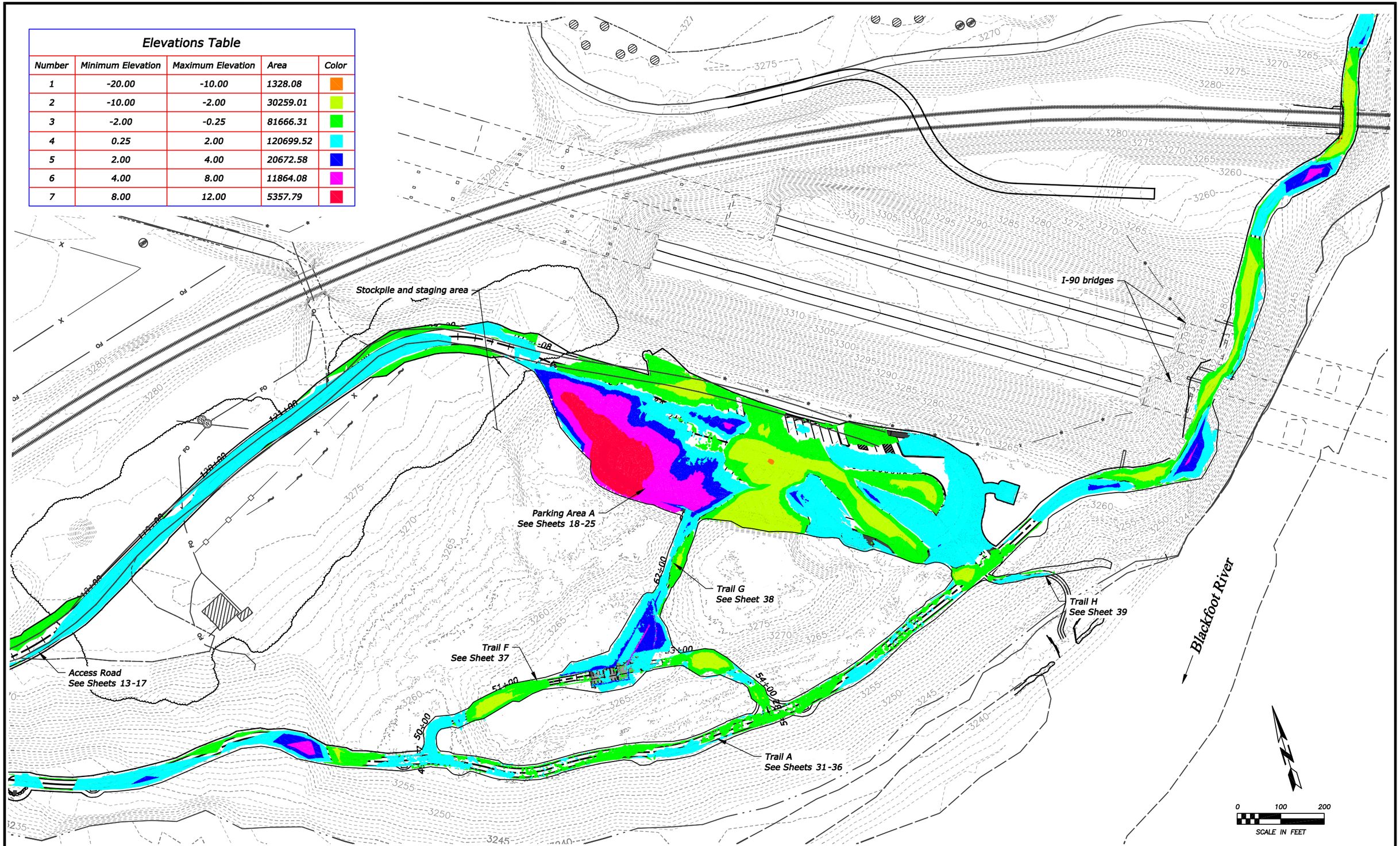

BY	DATE	REVISION DESCRIPTION

DESIGN DJL PROJ. NO. 5943
DRAWN DJL DATE 3/2017
CHECKED CA SURVEYED DJ&A

DJ&A, P.C.
CONSULTING ENGINEERS & LAND SURVEYORS
3203 Russell Street, Missoula, Montana 59801-8591
Phone 406/721-4320 Fax 406/549-8371

MT FISH, WILDLIFE & PARKS
MILLTOWN STATE PARK

AREA B GRADING PLAN

SHEET 47 OF 77

Gateway parking lot
See sheets 27-30

Gateway Access Road
See Sheet 26

Pedestrian bridge

Highway 200 bridge

Exxon gas station

Trail A
See Sheets 31-36

Blackfoot River

Railroad bridge

0 100 200
SCALE IN FEET

Elevations Table

Number	Minimum Elevation	Maximum Elevation	Area	Color
1	-20.00	-10.00	1328.08	
2	-10.00	-2.00	30259.01	
3	-2.00	-0.25	81666.31	
4	0.25	2.00	120699.52	
5	2.00	4.00	20672.58	
6	4.00	8.00	11864.08	
7	8.00	12.00	5357.79	

BY	DATE	REVISION DESCRIPTION

DESIGN DJL PROJ. NO. 5943
DRAWN DJL DATE 3/2017
CHECKED CA SURVEYED DJ&A

DJ&A, P.C.
CONSULTING ENGINEERS & LAND SURVEYORS
3203 Russell Street, Missoula, Montana 59801-8591
Phone 406/721-4320 Fax 406/549-8371

MONTANA STATE PARKS

MT FISH, WILDLIFE & PARKS
MILLTOWN STATE PARK

AREA C GRADING PLAN

SHEET 48 OF 77

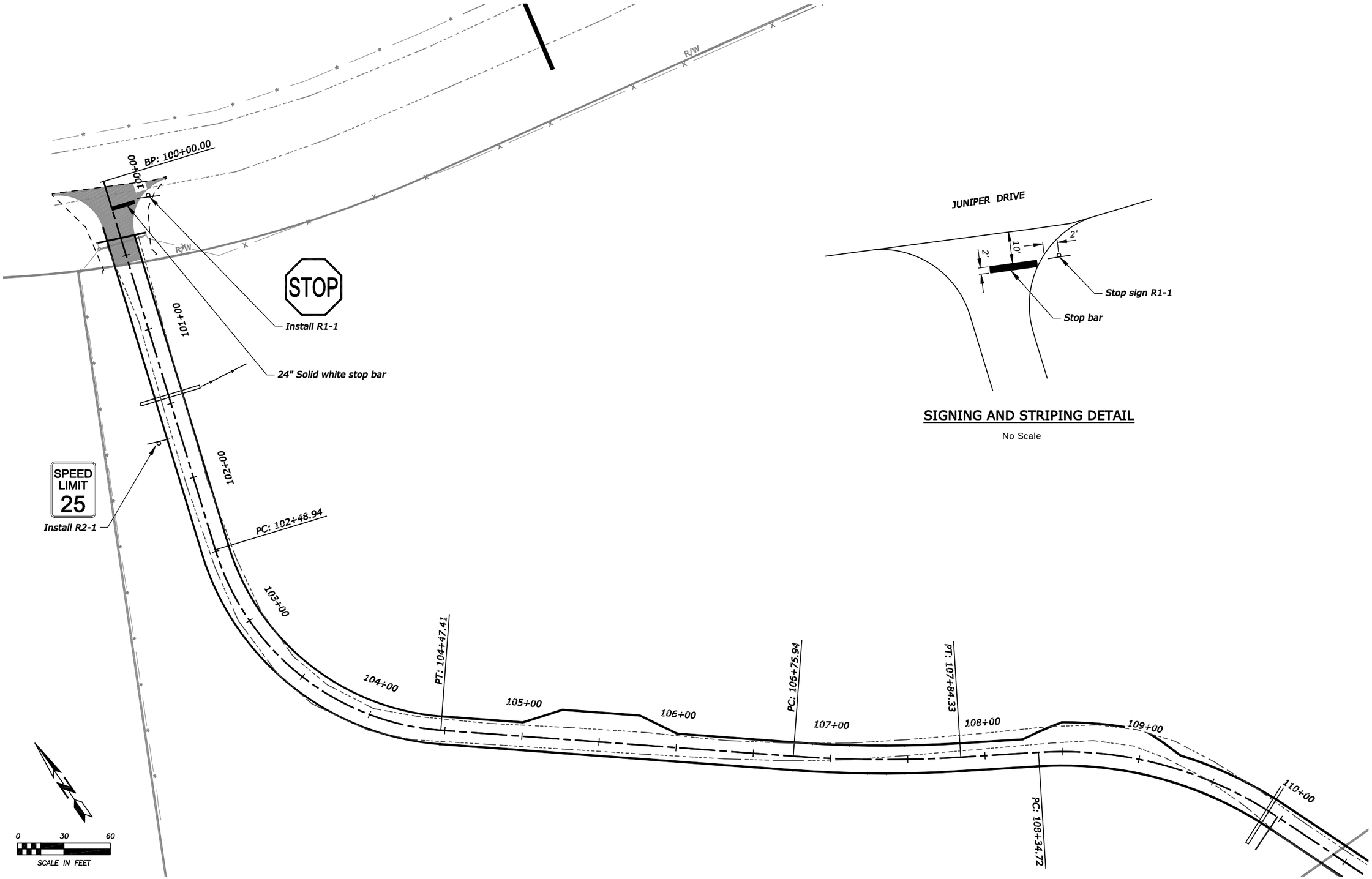

SIGNING AND STRIPING DETAIL

No Scale

BY	DATE	REVISION DESCRIPTION

DESIGN DJL PROJ. NO. 5943
DRAWN DJL DATE 3/2017
CHECKED CA SURVEYED DJ&A

DJ&A, P.C.
CONSULTING ENGINEERS & LAND SURVEYORS
3203 Russell Street, Missoula, Montana 59801-8591
Phone 406/721-4320 Fax 406/549-8371

MT FISH, WILDLIFE & PARKS

MILLTOWN STATE PARK

SIGN PLAN AND STRIPING DETAILS
ACCESS ROAD

SHEET 49 OF 77

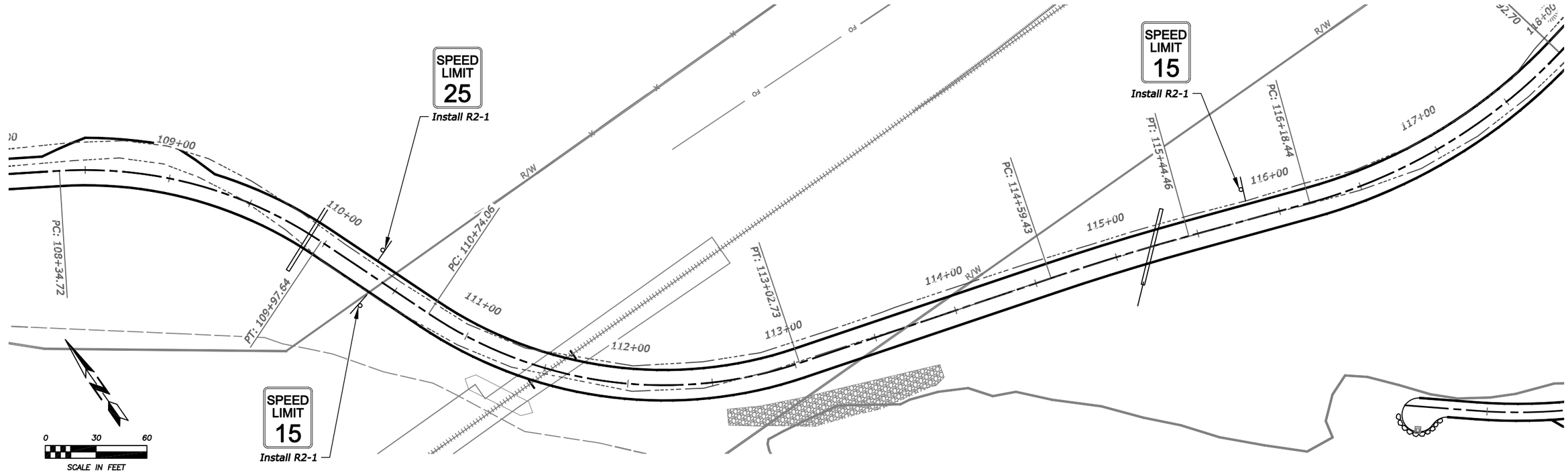

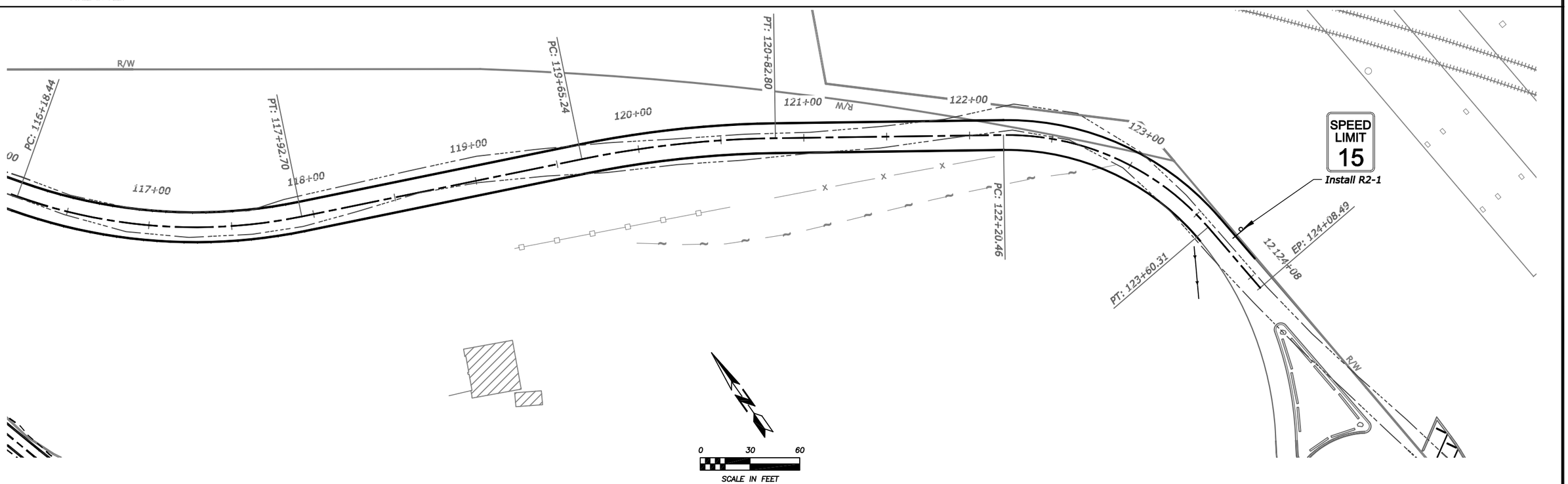

BY	DATE	REVISION DESCRIPTION

DESIGN DJL PROJ. NO. 5943
DRAWN DJL DATE 3/2017
CHECKED CA SURVEYED DJ&A

D&A, P.C.
CONSULTING ENGINEERS & LAND SURVEYORS
3203 Russell Street, Missoula, Montana 59801-5591
Phone 406/721-4320 Fax 406/549-5371

MT FISH, WILDLIFE & PARKS

MILLTOWN STATE PARK

SIGN PLAN AND STRIPING DETAILS
ACCESS ROAD

SHEET 50 OF 77

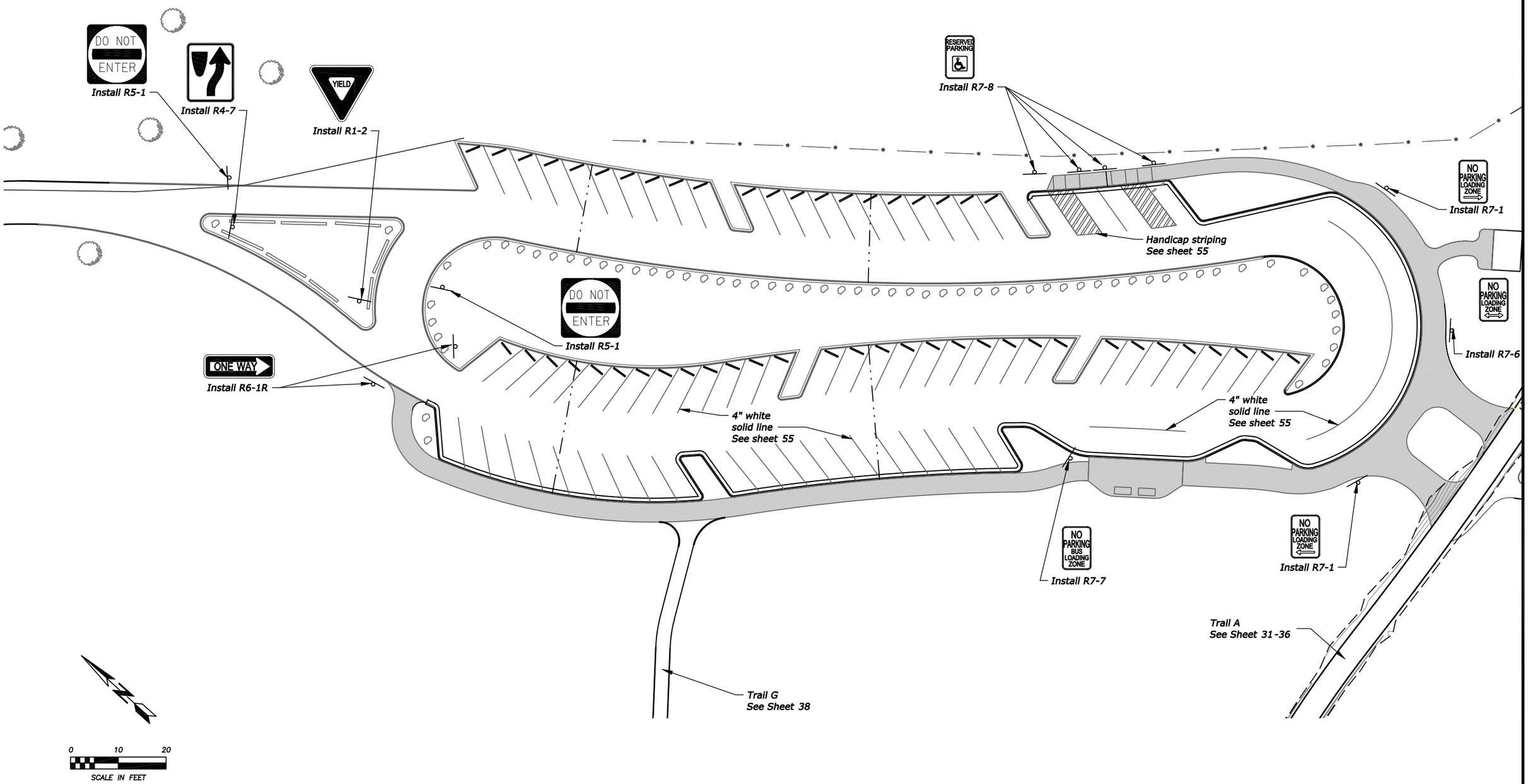

BY	DATE	REVISION DESCRIPTION

DESIGN DJL PROJ. NO. 5943
DRAWN DJL DATE 3/2017
CHECKED CA SURVEYED DJ&A

D&A, P.C.
CONSULTING ENGINEERS & LAND SURVEYORS
3203 Russell Street, Missoula, Montana 59801-8591
Phone 406/721-4320 Fax 406/549-8371

MT FISH, WILDLIFE & PARKS

MILLTOWN STATE PARK

SIGN PLAN AND STRIPING DETAILS
PARKING LOT A & TRAILHEAD SIGNS

SHEET 51 OF 77

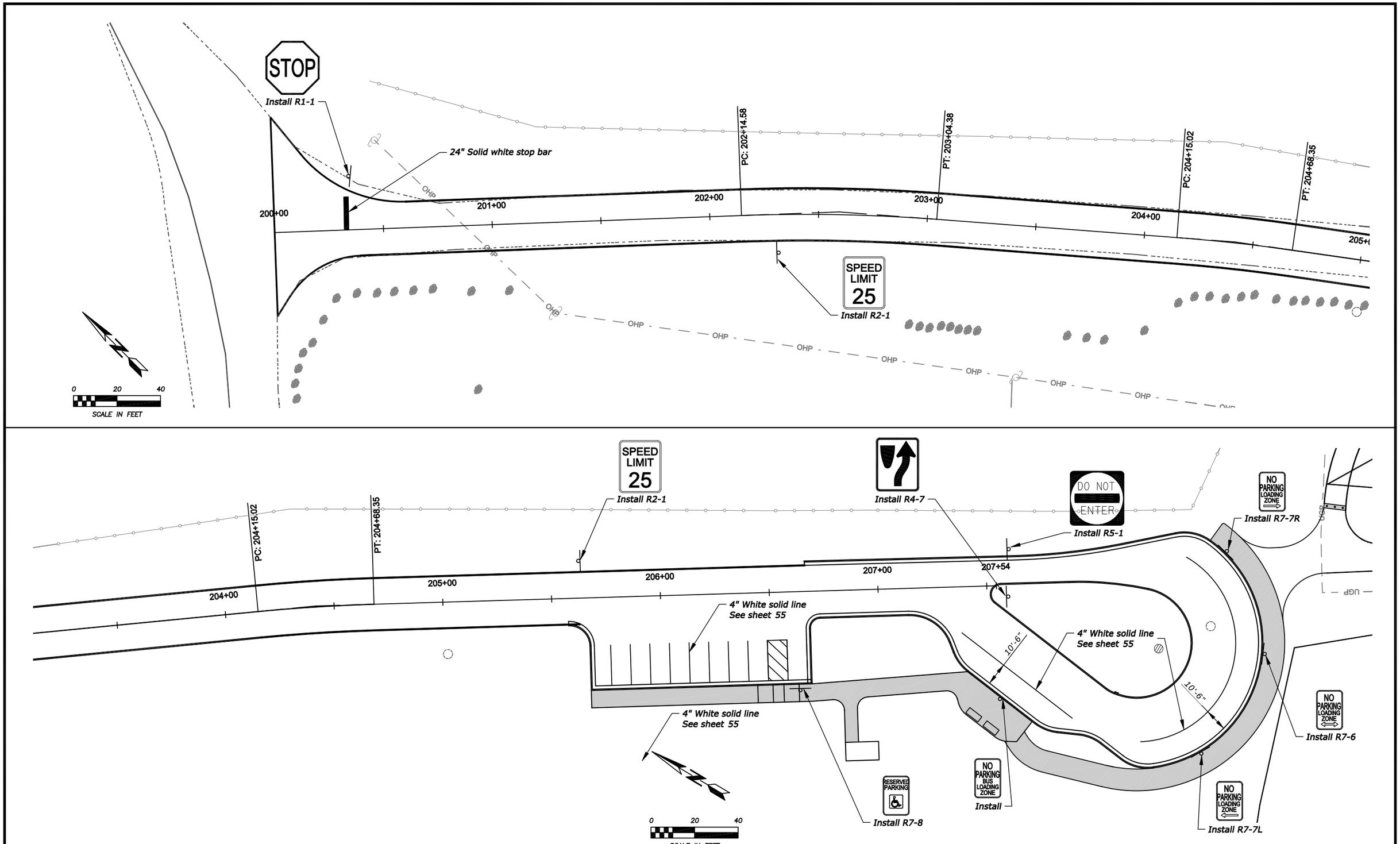

BY	DATE	REVISION DESCRIPTION

DESIGN DJL PROJ. NO. 5943
DRAWN DJL DATE 3/2017
CHECKED CA SURVEYED DJ&A

D&A, P.C.
CONSULTING ENGINEERS & LAND SURVEYORS
3203 Russell Street, Missoula, Montana 59801-5581
Phone 406/721-4320 Fax 406/549-8371

MT FISH, WILDLIFE & PARKS

MILLTOWN STATE PARK

BID ALT. 1
SIGN PLAN AND STRIPING DETAILS
GATEWAY ROAD

SHEET 52 OF 77

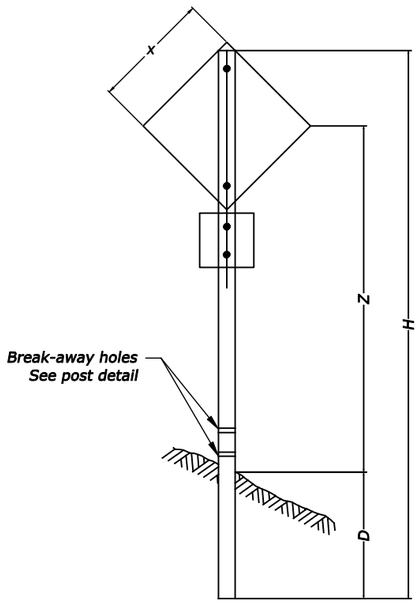

SINGLE POST SIGN

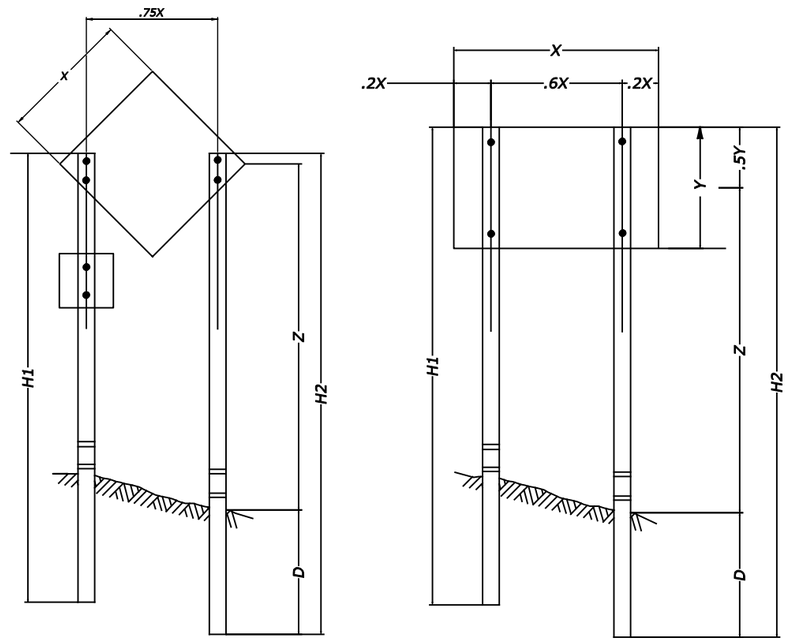

TWO POST SIGN

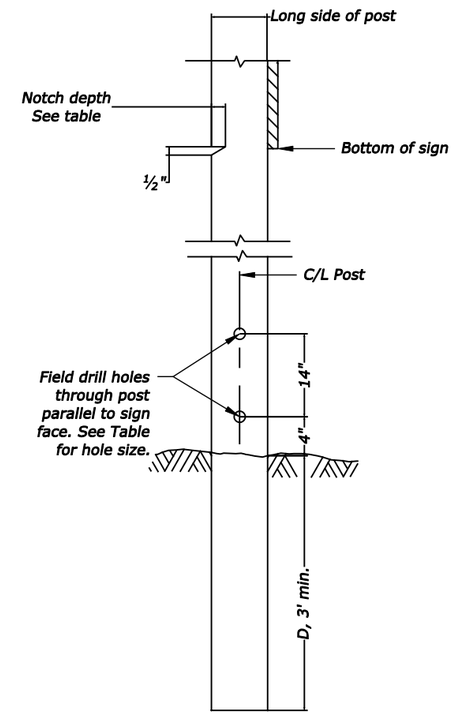

POST DETAIL

WOOD POST SELECTION TABLE						
SIGN SHAPE	X x Y	GROUNDLINE TO CENTER OF SIGN HEIGHT (Z)				
		Z IS 10' OR LESS				
		NUMBER OF POSTS	POST SIZE	D	HOLE SIZE	NOTCH DEPTH
◇ ⬡	30" x 30"	1	4" Ø	36"	0	0
◇ ◯ ⬡	36" x 36"	1 or 2	4" Ø	48" 36"	1-½" 0	0 0
◇ ⬡	48" x 48"	1	4" Ø	48"	1-½"	0
▭	36" x 12"	1	4" x 4"	36"	0	0
▯	12" x 18"	1	4" x 4"	36"	0	0

NOTE:

1. Install signs in relation to the road according to Part VI of the Manual on Uniform Traffic Control Devices.
2. Attach sign panels with a minimum of (2) ¼" diameter bolts per post.
3. Mount signs smaller than listed on 1-4"x4" post.
4. H1 and H2 - Overall post length. Select post lengths to fit field conditions.
5. D= Minimum post embedment depth for average soil conditions.

NO SCALE

BY	DATE	REVISION DESCRIPTION

DESIGN DJL PROJ. NO. 5943
DRAWN DJL DATE 3/2017
CHECKED CA SURVEYED DJ&A

DJ&A, P.C.
CONSULTING ENGINEERS & LAND SURVEYORS
3203 Russell Street, Missoula, Montana 59801-8591
Phone 406/721-4320 Fax 406/549-8371

MT FISH, WILDLIFE & PARKS
MILLTOWN STATE PARK

SIGN DETAILS

SHEET 53 OF 77

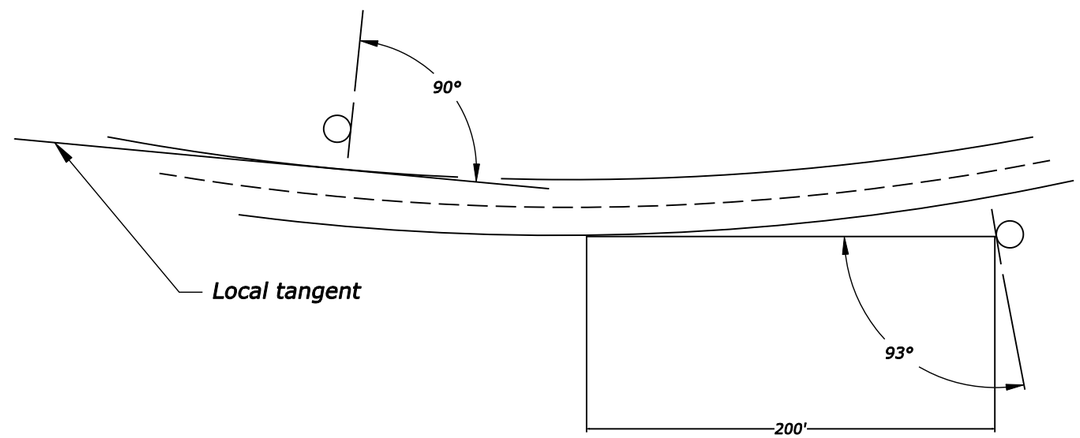

On tangent alignment 93°

SIGN INSTALLATION ANGLE

No Scale

BY	DATE	REVISION DESCRIPTION

DESIGN DJL PROJ. NO. 5943
DRAWN DJL DATE 3/2017
CHECKED CA SURVEYED DJ&A

DJ&A, P.C.
CONSULTING ENGINEERS & LAND SURVEYORS
3203 Russell Street, Missoula, Montana 59801-8591
Phone 406/721-4320 Fax 406/549-8371

MT FISH, WILDLIFE & PARKS

MILLTOWN STATE PARK

SIGN DETAILS

SHEET 54 OF 77

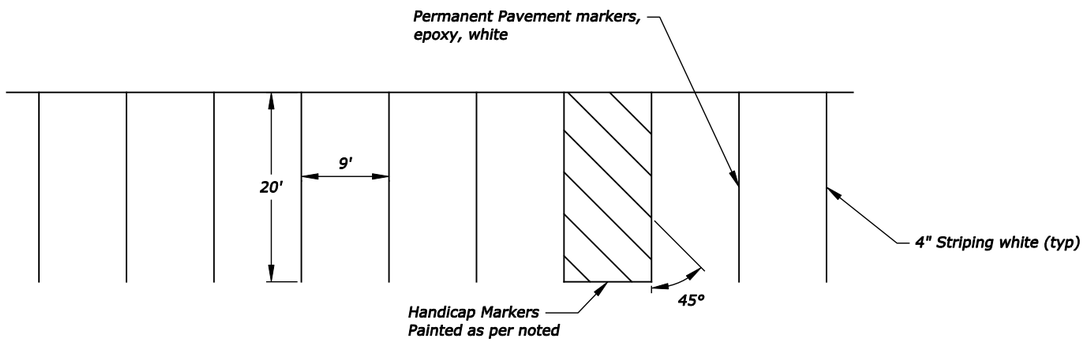

PERPENDICULAR PARKING STRIPING DETAIL

No Scale

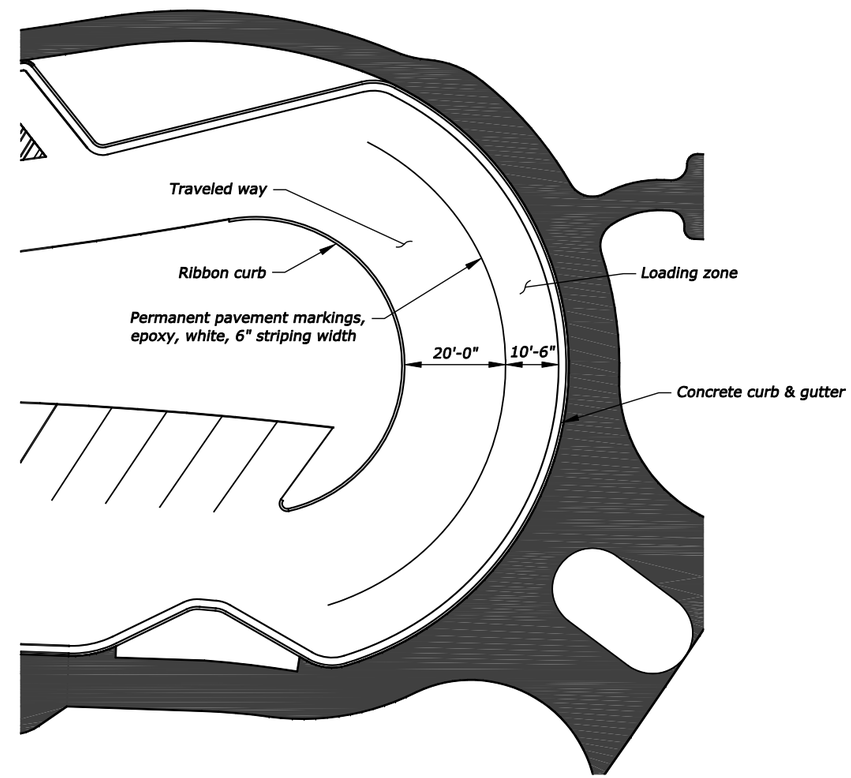

LOADING ZONE STRIPING DETAIL

No Scale

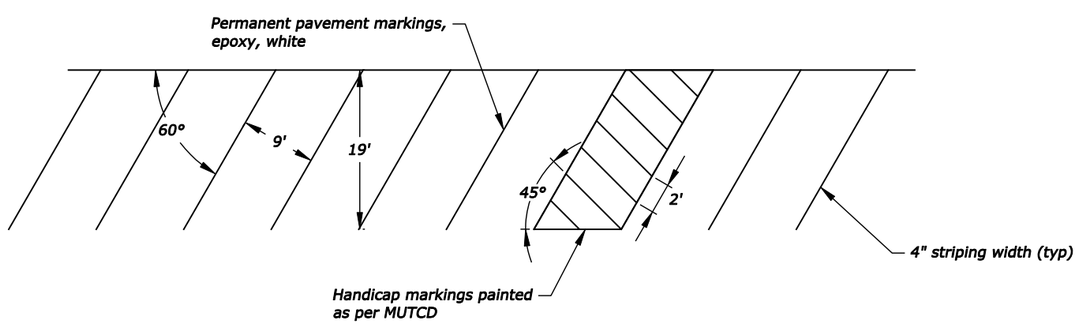

ANGLED PARKING STRIPING DETAIL

No Scale

BY	DATE	REVISION DESCRIPTION

DESIGN DJL PROJ. NO. 5943
DRAWN DJL DATE 3/2017
CHECKED CA SURVEYED DJ&A

DJ&A, P.C.
CONSULTING ENGINEERS & LAND SURVEYORS
3203 Russell Street, Missoula, Montana 59801-8591
Phone 406/721-4320 Fax 406/549-8371

MT FISH, WILDLIFE & PARKS
MILLTOWN STATE PARK

STRIPING DETAILS

SHEET 55 OF 77

6' CHAINLINK FENCE

4' CHAINLINK FENCE

NOTE:
Existing fence will be removed prior to construction. By others.

745 LF Vinyl coated chain link fence

Chain link double swing gate with locking mechanism

Trail A

Road closure gate
See pipe gate details sheet 58

74 LF

Chain link walk through gate with locking mechanism

Vinyl coated chain link fence
See detail sheet 57

Bid Alt. 2
90 LF Vinyl coated chain link fence

Not included in this contract
305 LF Vinyl coated chain link fence

173 LF

Chain link double swing gate with locking mechanism

Not included in this contract
654 LF Vinyl coated chain link fence

Not included in this contract
290 LF Vinyl coated chain link fence

322 LF Vinyl coated chain link fence

Access road

Trail G

Trail F

Trail H

80 LF Vinyl coated chain link fence

972 LF Vinyl coated chain link fence

Trail A

0 100 200

SCALE IN FEET

BY	DATE	REVISION DESCRIPTION

DESIGN DJL PROJ. NO. 5943
DRAWN DJL DATE 3/2017
CHECKED CA SURVEYED DJ&A

DJ&A, P.C.
CONSULTING ENGINEERS & LAND SURVEYORS
3203 Russell Street, Missoula, Montana 59801-8591
Phone 406/721-4320 Fax 406/549-8371

MONTANA STATE PARKS

MT FISH, WILDLIFE & PARKS

MILLTOWN STATE PARK

FENCING AND GATE PLAN

SHEET 56 OF 77

NOTE:

1) The color of the fence shall be brown.

2) Install SS40 steel posts and rails.

3) Install 9 gauge core mesh that is vinyl coated. Total mesh size shall be 6 gauge.

4) Construct fence adjacent to the trail with a minimum of 1 foot of clearance from the edge of the asphalt. If the fence has less than 2 feet of clearance from the edge of the asphalt, place the end posts a minimum of 2 feet from the edge of the asphalt and transition the fence to the offset that has less than 2 feet of clearance. Contractor must layout the fence for approval by the Engineer prior to installation.

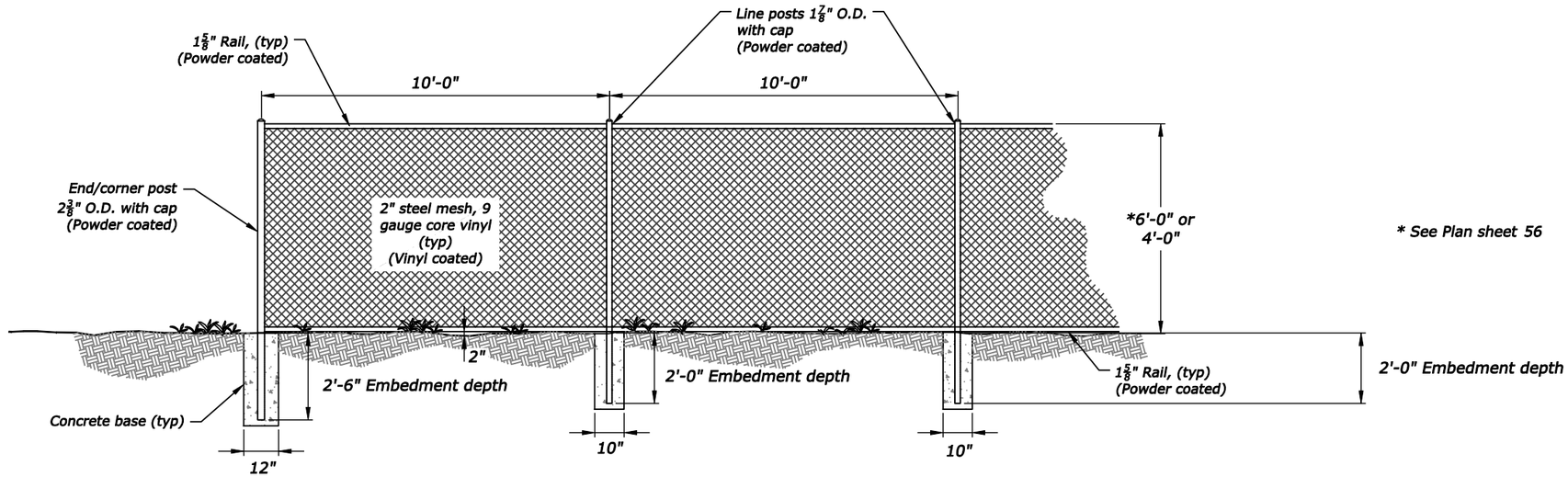

CHAIN-LINK FENCE DETAIL

Scale 1" = 2'

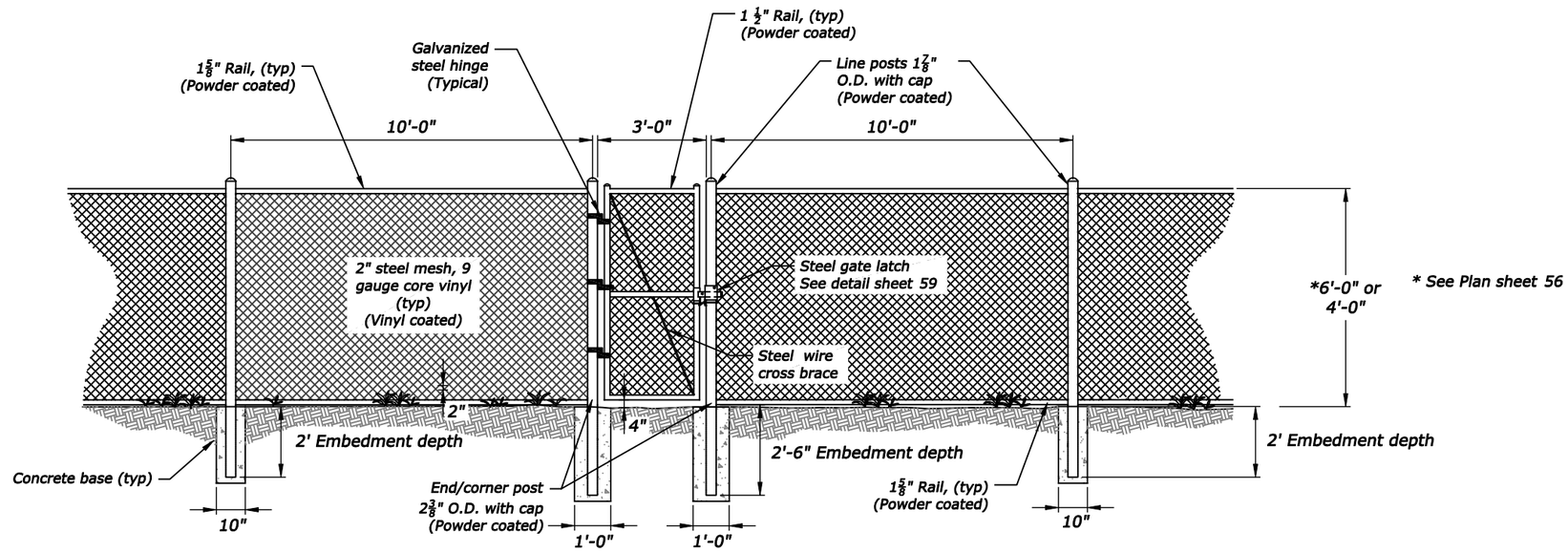

CHAIN-LINK WALK THROUGH GATE DETAIL

Scale 1" = 2'

BY	DATE	REVISION DESCRIPTION

DESIGN DJL PROJ. NO. 5943
DRAWN DJL DATE 3/2017
CHECKED CA SURVEYED DJ&A

D J&A, P.C.
CONSULTING ENGINEERS & LAND SURVEYORS
3203 Russell Street, Missoula, Montana 59801-8591
Phone 406/721-4320 Fax 406/549-8371

MT FISH, WILDLIFE & PARKS

MILLTOWN STATE PARK

FENCING DETAILS

SHEET 57 OF 77

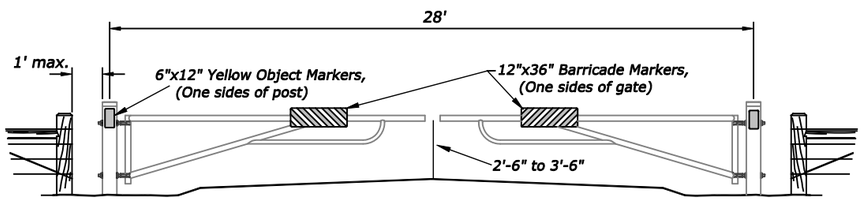

ELEVATION

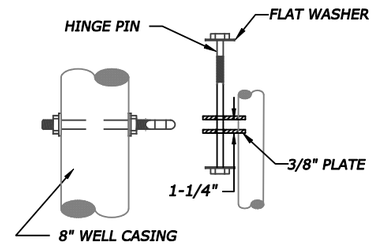

HINGE DETAIL

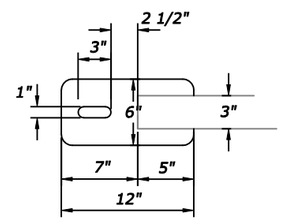

MIDDLE FLANGE

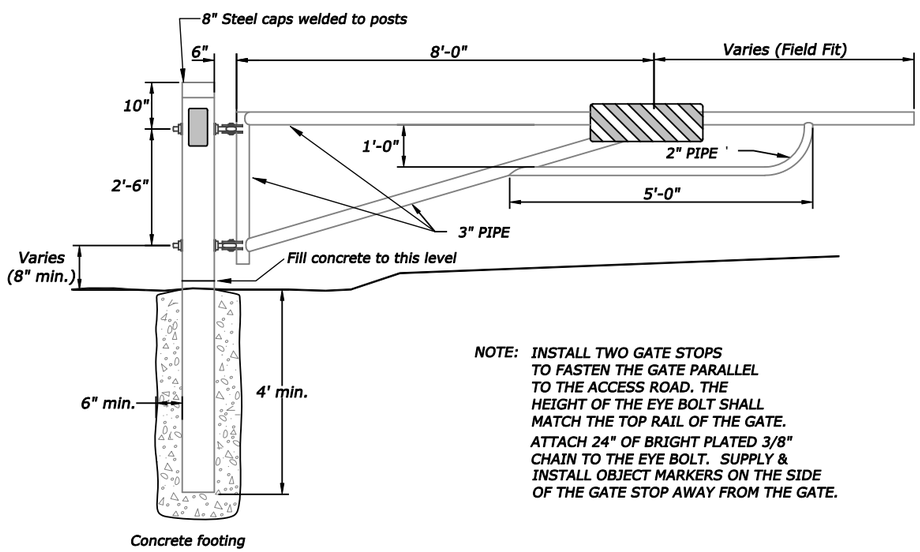

NOTE: INSTALL TWO GATE STOPS TO FASTEN THE GATE PARALLEL TO THE ACCESS ROAD. THE HEIGHT OF THE EYE BOLT SHALL MATCH THE TOP RAIL OF THE GATE.
ATTACH 24" OF BRIGHT PLATED 3/8" CHAIN TO THE EYE BOLT. SUPPLY & INSTALL OBJECT MARKERS ON THE SIDE OF THE GATE STOP AWAY FROM THE GATE.

PIPE GATE DETAIL

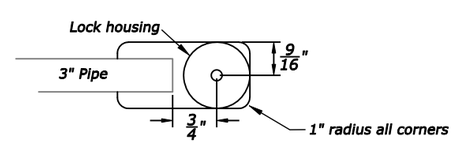

TOP AND BOTTOM FLANGE

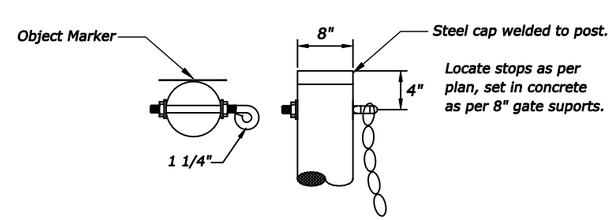

GATE STOP DETAIL

GENERAL NOTES

1. GATE WILL BE PROVIDED BY FWP MONTANA. CONTRACTOR SHALL FURNISH THE CONCRETE AND INSTALL THE FWP GATE, HARDWARE AND OBJECT MARKERS.
2. GATE DETAILS AS SHOWN ARE DERIVED FROM STANDARD DETAILS PROVIDED BY FWP MONTANA.
3. STEEL CAPS FOR GATE POSTS SHALL BE WELDED TO POST AND GROUND SMOOTH.
4. POSTS FOR GATE & STOPS TO BE STANDARD STEEL WELL CASING.
5. GATE AND ALL POSTS TO BE FINISHED w/ POLYUREATHANE PAINT.
6. ALL WELDS TO BE GROUND SMOOTH.
7. LENGTH OF GATE & STOP POSTS VARIES DEPENDING ON TERRAIN. ADJUST LENGTH AS NECESSARY FOR FINISH GRADE ELEVATIONS.

HINGE DETAILS

1. HINGE BOLT THREADS TO BE EXPOSED A MIN. OF 1 1/2" BEYOND NUTS ON EITHER SIDE OF THE GATE POST TO ALLOW ADJUSTMENT .
2. GREASE THREADS OF HINGE BOLTS BEFORE INSTALLING.

BY	DATE	REVISION DESCRIPTION

DESIGN DJL PROJ. NO. 5943
DRAWN DJL DATE 3/2017
CHECKED CA SURVEYED DJ&A

D&A, P.C.
CONSULTING ENGINEERS & LAND SURVEYORS
3203 Russell Street, Missoula, Montana 59801-5591
Phone 406/721-4320 Fax 406/549-5371

MT FISH, WILDLIFE & PARKS
MILLTOWN STATE PARK

GATE DETAILS

SHEET 58 OF 77

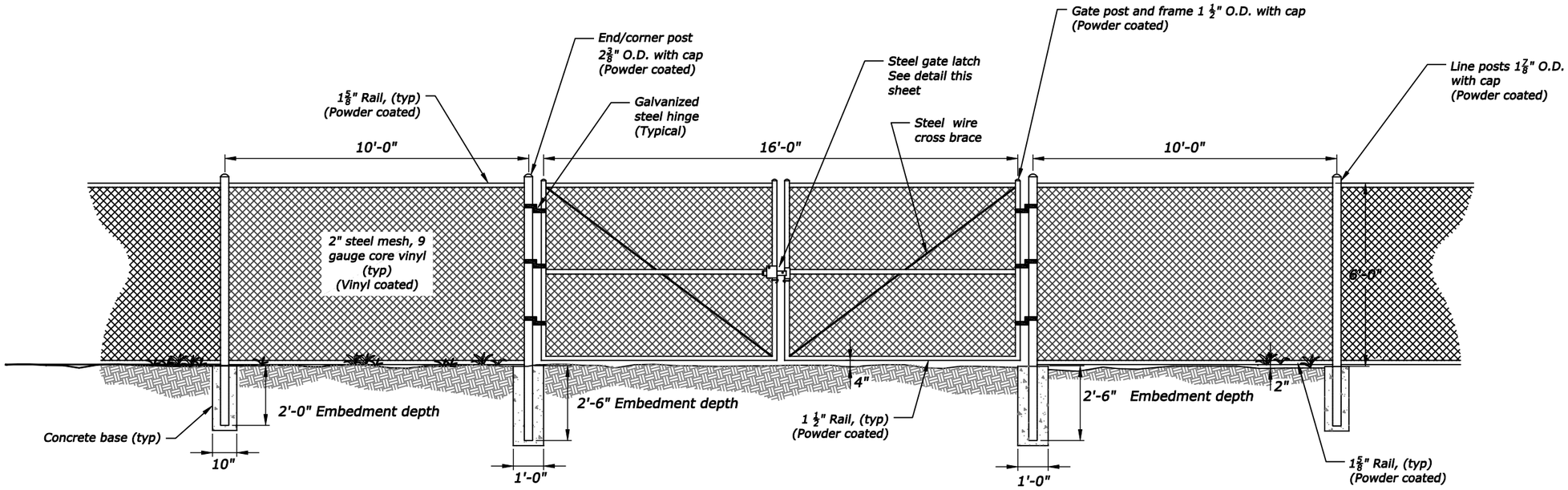

CHAIN-LINK DOUBLE SWING GATE W/LOCKING MECHANISM DETAIL

Scale 1" = 2'

NOTE:

1) The color of the fence shall be brown.

2) Install SS40 steel posts and rails.

3) Install 9 gauge core mesh that is vinyl coated. Total mesh size shall be 6 gauge.

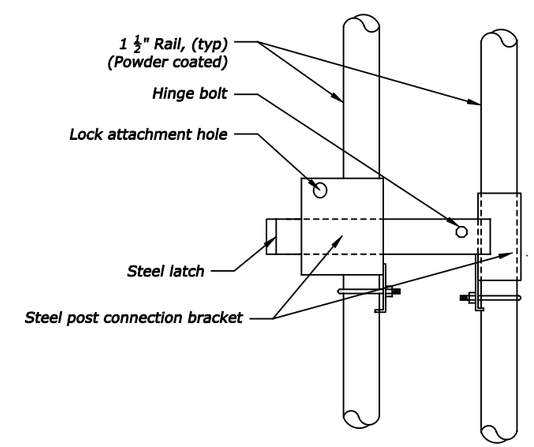

CHAIN-LINK DOUBLE GATE LATCH DETAIL

Not to scale

BY	DATE	REVISION DESCRIPTION

DESIGN DJL PROJ. NO. 5943
DRAWN DJL DATE 3/2017
CHECKED CA SURVEYED DJ&A

DJ&A, P.C.
CONSULTING ENGINEERS & LAND SURVEYORS
3203 Russell Street, Missoula, Montana 59801-8391
Phone 406/721-4320 Fax 406/549-8371

MT FISH, WILDLIFE & PARKS

MILLTOWN STATE PARK

FENCE DETAILS

SHEET 59 OF 77

Notes:

1.) Total estimated area of landscaping is 162,000 SF:
Base Schedule: 2.6 Acres
Not included in this contract: 0.2 Acres
Bid Alt. 1: 0.6 Acres
Bid Alt. 2: 0.3 Acres

2.) See specifications for topsoil, seed mix design and application rate.

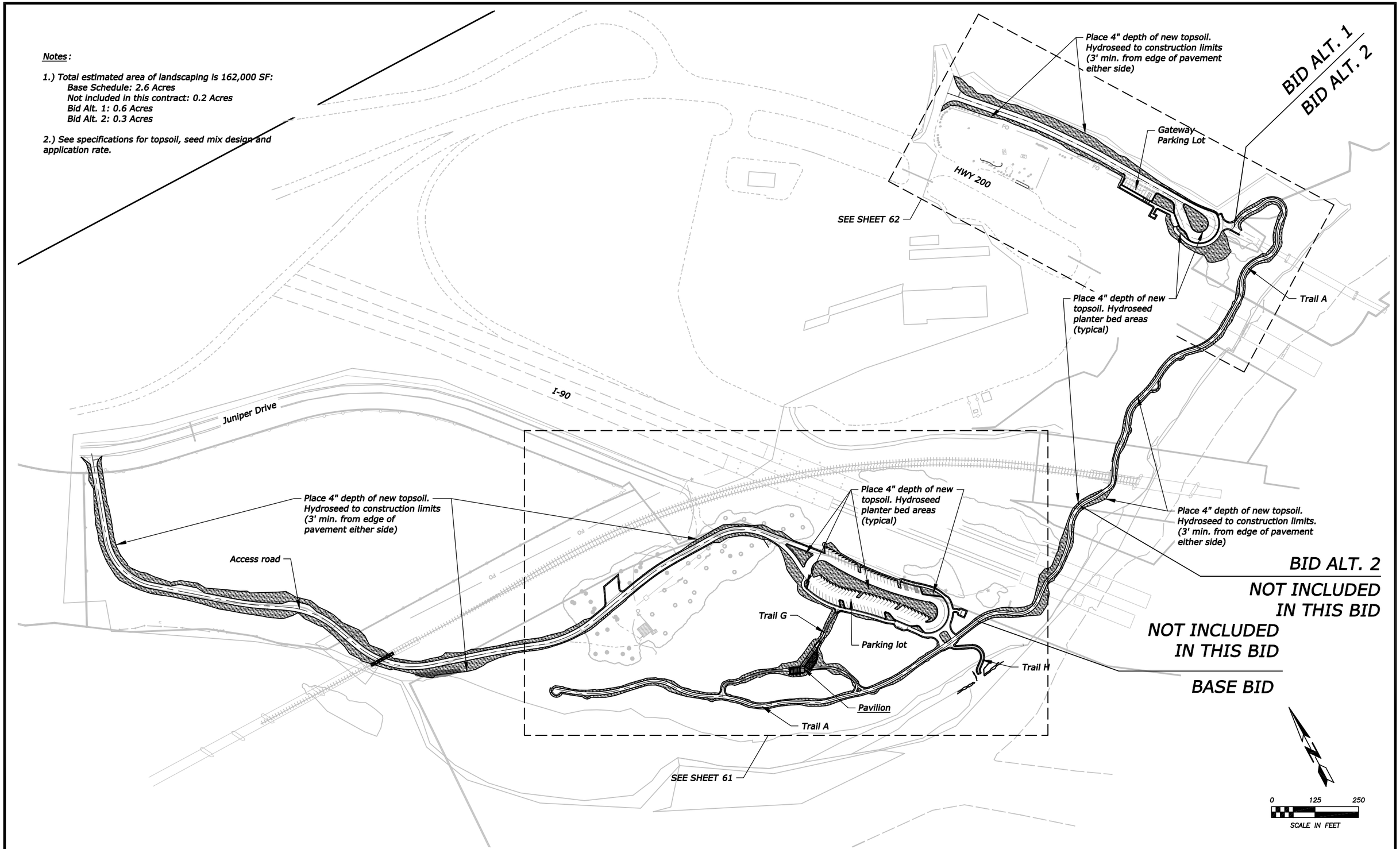

BY	DATE	REVISION DESCRIPTION

DESIGN DJL PROJ. NO. 5943
DRAWN KJG DATE 3/2017
CHECKED CA SURVEYED DJ&A

D&A, P.C.
CONSULTING ENGINEERS & LAND SURVEYORS
3203 Russell Street, Missoula, Montana 59801-8591
Phone 406/721-4320 Fax 406/549-8371

MONTANA STATE PARKS
REAL MONTANA. REAL CLOSE.

MT FISH, WILDLIFE & PARKS

MILLTOWN STATE PARK

LANDSCAPING PLAN
OVERVIEW

SHEET 60 OF 77

Notes:

1.) See specifications for topsoil, seed mix design and application rate.

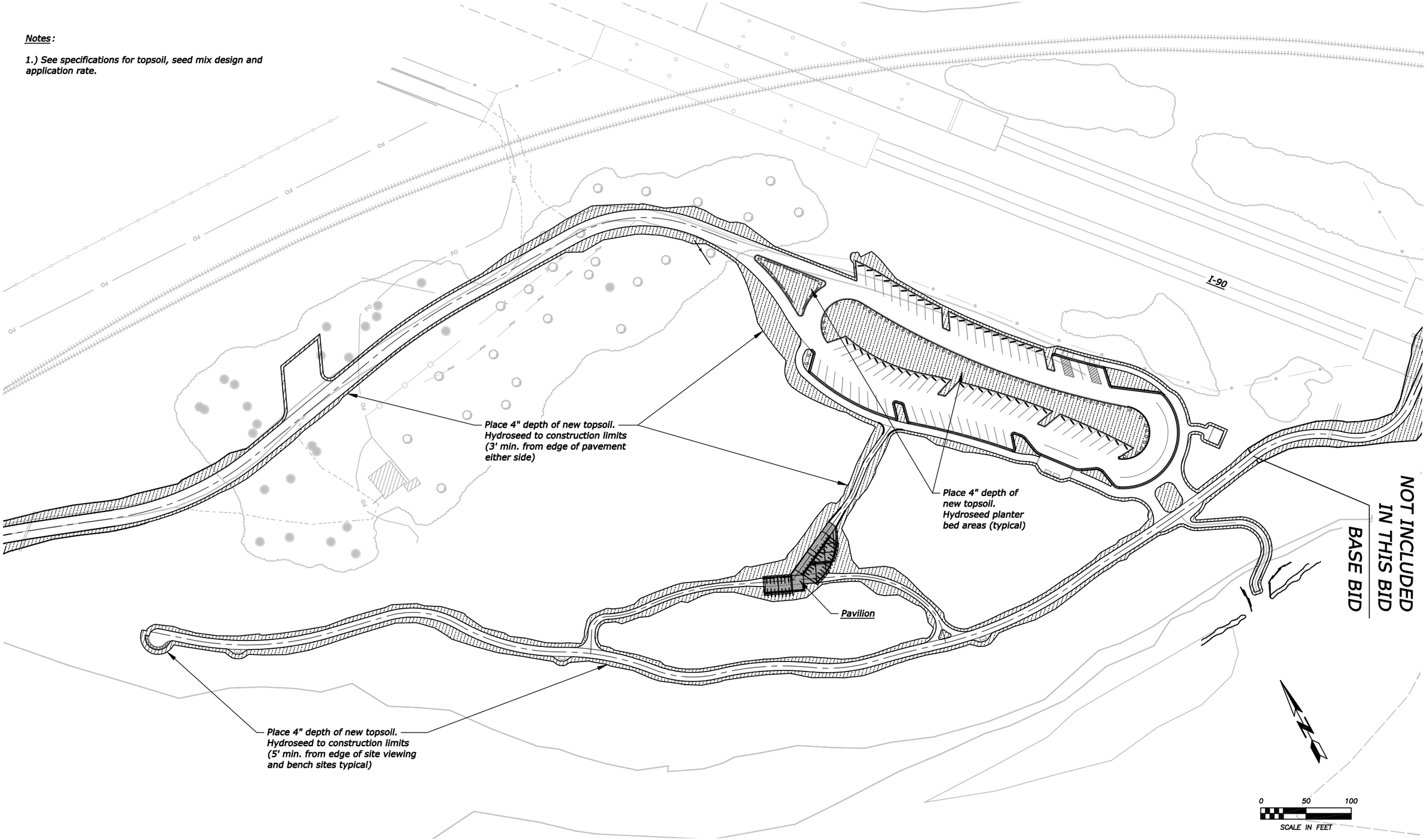

BY	DATE	REVISION DESCRIPTION

DESIGN DJL PROJ. NO. 5943
DRAWN KJG DATE 3/2017
CHECKED CA SURVEYED DJ&A

D&A, P.C.
CONSULTING ENGINEERS & LAND SURVEYORS
3203 Russell Street, Missoula, Montana 59801-8581
Phone 406/721-4320 Fax 406/549-8371

MONTANA STATE PARKS
REAL MONTANA REAL FUN

MT FISH, WILDLIFE & PARKS

MILLTOWN STATE PARK

LANDSCAPING PLAN
WEST OF I-90

SHEET 61 OF 77

Notes:

1.) See specifications for topsoil, seed mix design and application rate.

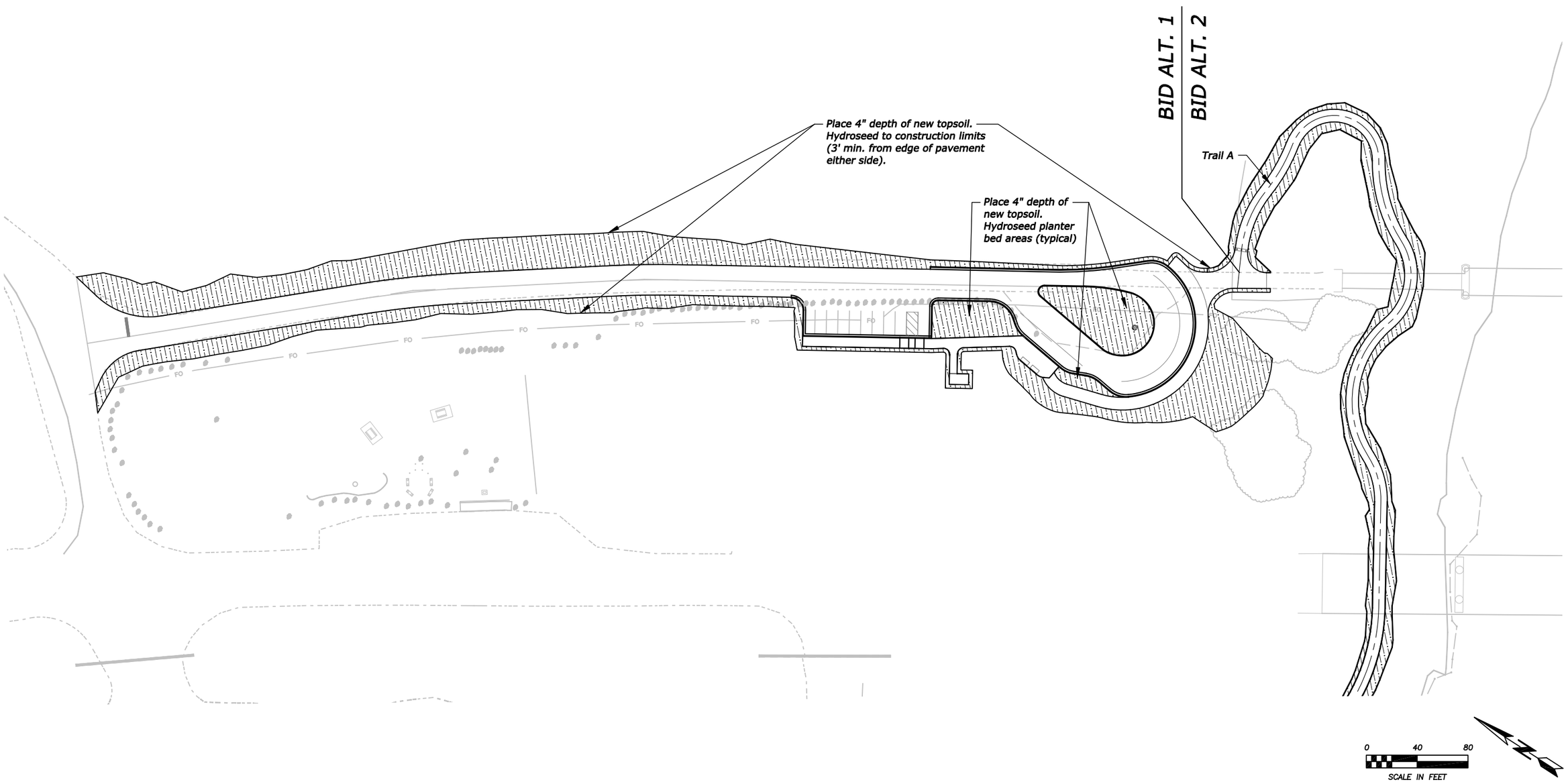

BY	DATE	REVISION DESCRIPTION

DESIGN	DJL	PROJ. NO.	5943
DRAWN	KJG	DATE	3/2017
CHECKED	CA	SURVEYED	DJ&A

DJ&A, P.C.
CONSULTING ENGINEERS & LAND SURVEYORS
3203 Russell Street, Missoula, Montana 59801-8391
Phone 406/721-4320 Fax 406/549-8371

MT FISH, WILDLIFE & PARKS

MILLTOWN STATE PARK

LANDSCAPING PLAN
GATEWAY ACCESS ROAD

SHEET 62 OF 77