APPROVED
FOR CONSTRUCTION

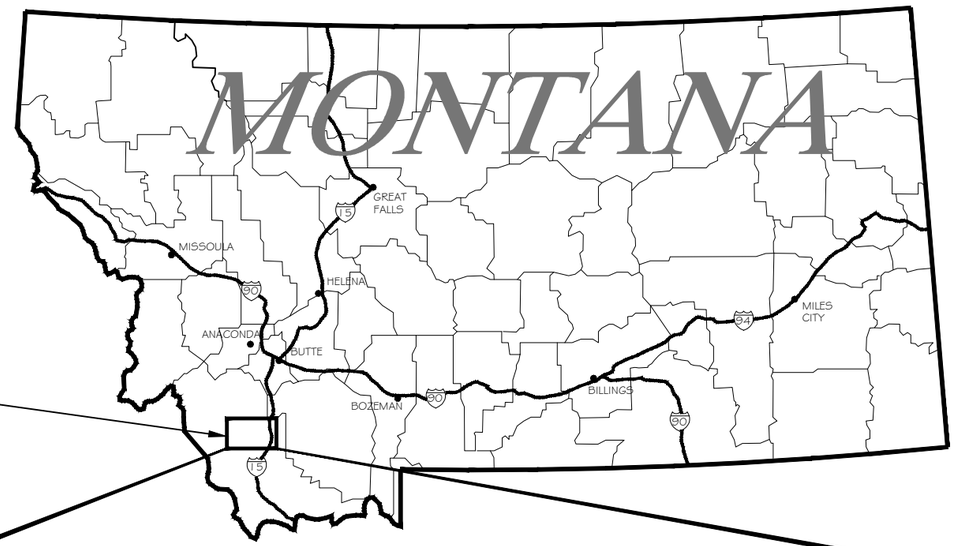

PROJECT LOCATION

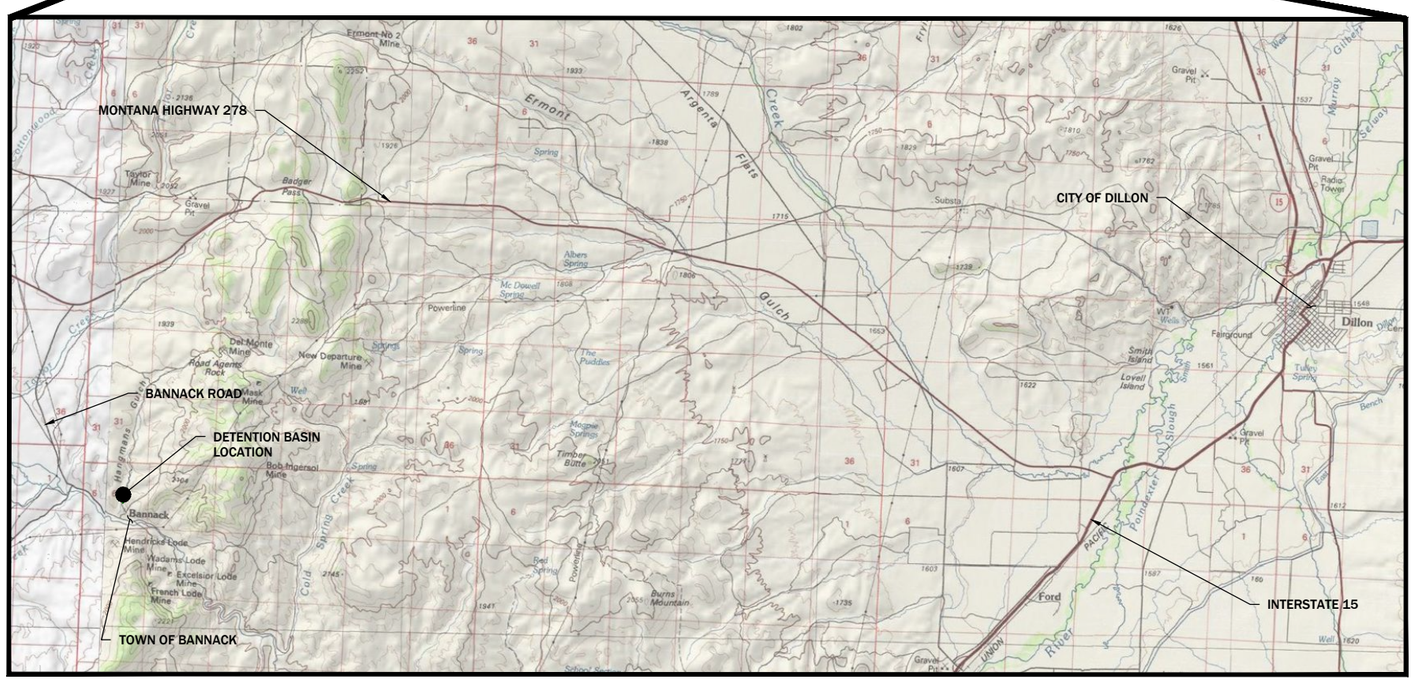

SITE VICINITY MAP

SOURCE: ESRI

MONTANA DEPARTMENT OF FISH, WILDLIFE & PARKS

BANNACK DETENTION BASIN BANNACK STATE PARK BEAVERHEAD COUNTY, MT

PREPARED BY

PIONEER TECHNICAL SERVICES, INC.
DATE: 01/17/17

SHEET INDEX

GENERAL

SHEET NO.	DRAWING TITLE
1-1	TITLE, LOCATION AND VICINITY MAP, INDEX TO DRAWINGS
1-2	LEGEND AND ABBREVIATIONS
1-3	SITE PLAN

EROSION CONTROL

SHEET NO.	DRAWING TITLE
2-1	TRAIL CONSTRUCTION EROSION CONTROL PLAN
2-2	EXCAVATION/EMBANKMENT EROSION CONTROL PLAN
2-3	EROSION CONTROL/BMP DETAILS

TRAIL CONSTRUCTION

SHEET NO.	DRAWING TITLE
3-1	TRAIL PLAN AND PROFILE
3-2	TRAIL TYPICAL SECTIONS
3-3	TRAIL ROLLING DIP

OUTLET WORKS

SHEET NO.	DRAWING TITLE
4-1	DETENTION BASIN OUTLET STRUCTURE PLAN AND PROFILE
4-2	DETENTION BASIN OUTLET STRUCTURE DETAILS
4-3	DETENTION BASIN, STILLING BASIN AND PIPE DETAILS
4-4	OUTLET STRUCTURE DETAILS
4-5	OUTLET STRUCTURE DETAILS
4-6	OUTLET STRUCTURE DETAILS
4-7	OUTLET STRUCTURE DETAILS
4-8	OUTLET STRUCTURE DETAILS
4-9	HANDRAIL DETAILS

EMBANKMENT/EXCAVATION

SHEET NO.	DRAWING TITLE
5-1	GRADING PLAN
5-2	DETENTION BASIN PLAN AND PROFILE
5-3	CROSS SECTIONS (1 OF 2)
5-4	CROSS SECTIONS (2 OF 2)
5-5	EMBANKMENT PLAN AND PROFILE
5-6	DETAILS
5-7	DETAILS

FINAL GRADING AND REVEGETATION

SHEET NO.	DRAWING TITLE
6-1	FINAL GRADING AND REVEGETATION PLAN

MONTANA
GEORGE E. AUSTIGUY
9528PE
REGISTERED PROFESSIONAL ENGINEER
01-17-17

SHEET 1-1

ABBREVIATIONS

AB	ANCHOR BOLT, ABOVE
ABDN	ABANDON
AC	ASPHALTIC CONCRETE
AD	AREA, DRAIN
ADDL	ADDITIONAL
ADJ	ADJACENT
AGGR	AGGREGATE
AHR	ANCHOR
ADJ	ADJUSTABLE
APPROX	APPROXIMATE
APVD	APPROVED
AUTO	AUTOMATIC
AUX	AUXILIARY
AVG	AVERAGE
@	AT
BETW	BETWEEN
BF	BLIND FLANGE, BOTTOM FACE
BG	BELOW GRADE
BLDG	BUILDING
BLK	BLOCK
BM	BEAM, BENCHMARK
BOT	BOTTOM
BRG	BEARING
BRKR	BREAKER
BVC	BEGINNING OF VERTICAL CURVE
C	CONDUIT, CASEMENT
C TO C	CENTER TO CENTER
CAB	CABINET
CB	CATCH BASIN, CIRCUIT BREAKER
CC	CONTROL CABLE
CCL	COMPACTED CLAY LAYER
CCP	CENTRAL CONTROL PANEL
CCS	CENTRAL CONTROL SYSTEM
CDN	COMPOSITE DRAINAGE NET
CIP	CAST IN PLACE
CIP	CULVERT INLET PROTECTION
CJ	CONSTRUCTION JOINT
CL	CENTERLINE
CLSF	CONTROLLED LOW STRENGTH FILL
CLR	CLEAR, CLEARANCE
CMP	CORRUGATED METAL PIPE
CO	CLEANOUT, CARBON MONOXIDE
CONC	CONCRETE
CONN	CONNECTION
CONSTR	CONSTRUCTION
CONT	CONTINUED, CONTINUATION
COORD	COORDINATE
CP	CONTROL POINT
CRS	COLD ROLLED STEEL
CRS	CONSTRUCTION ROAD STABILIZATION
CTR	CENTER
CTRD	CENTERED
CU	CUBIC
CU FT	CUBIC FOOT
CU IN	CUBIC INCH
CY, CU YD	CUBIC YARD
DET	DETAIL
DIA	DIAMETER
DIAG	DIAGONAL
DIR	DIRECTION
DISCH	DISCHARGE
DWG	DRAWING
△	DELTA
E	EAST, EMPTY
EA	EACH
EF	EACH FACE
EL	ELEVATION
ELB	ELBOW
ELC	ELECTRICAL LOAD CENTER
ELEC	ELECTRIC, ELECTRICAL
ENGR	ENGINEER
EQL SP	EQUALLY SPACED
EQPT	EQUIPMENT
ESC	EROSION AND SEDIMENT CONTROL
EVC	END OF VERTICAL CURVE
EW	EACH WAY
EXP	EXPANSION, EXPOSED
EXP AB	EXPANSION ANCHOR BOLT
EXP JT	EXPANSION JOINT
EXST, EXIST	EXISTING
EXT	EXTERIOR
FC	FLEXIBLE CONDUIT/ CONNECTOR
FCA	FLANGED COUPLING ADAPTER
FDN	FOUNDATION
FG	FINISH GRADE
FHY	FIRE HYDRANT
FIG	FIGURE
FL	FLOW LINE
FLG	FLANGE
FL	FLOOR
FLEX	FLEXIBLE
FNSH	FINISH
FOB	FLAT ON BOTTOM
FP	FIELD PANEL
FPL	FROST PROTECTION LAYER
FPM	FEET PER MINUTE
FT	FOOT OR FEET
FWD	FORWARD
G, GND	GROUND
GA	GAUGE
GAL	GALLON
GALV	GALVANIZED
GC	GROOVED COUPLING
GCL	GEOSYNTHETIC CLAY LINER
GVL	GRAVEL
HDPE	HIGH DENSITY POLYETHYLENE
HH	HANDHOLE
HORIZ	HORIZONTAL
HP	HORSEPOWER
HPT	HIGH POINT
HWL	HIGH WATER LEVEL
IE	INVERT ELEVATION
I.F.	INSIDE FACE
IN	INCH(ES)
INVT	INVERT
IP	INLET PROTECTION
IRRIG	IRRIGATION
JB	JUNCTION BOX
JCT	JUNCTION
JT	JOINT
L	ANGLE, LENGTH
LB(S)	POUND(S)
LDS	LEAK DETECTION SYSTEM
LF	LINEAR FEET
LG	LONG
LONG	LONGITUDINAL
LP	LIGHT POLE
LPT	LOW POINT
LR	LONG RADIUS
LT	LEFT
LTG, LTS	LIGHTS OR LIGHTING
MATL	MATERIAL
MAX	MAXIMUM
MECH	MECHANICAL
MFD	MANUFACTURED
MFR	MANUFACTURER
MH	MANHOLE, MOUNTING HEIGHT
MIN	MINIMUM
MISC	MISCELLANEOUS
MS	MANUFACTURER'S STANDARD
MT	MOUNT
MTD	MOUNTED
MTG	MOUNTING
MU	MULCHING
MWS	MAXIMUM WATER SURFACE
N	NORTH
NA	NOT APPLICABLE
NAD	NORTH AMERICAN DATUM
NAVD	NORTH AMERICAN VERTICAL DATUM
NEUT	NEUTRAL
NG	NATURAL GAS
NGVD	NATIONAL GEODETIC VERTICAL DATUM
NIC	NOT IN CONTRACT
N.O.	NORMALLY OPEN
NO., #	NUMBER
NOM	NOMINAL
N-S	NORTH - SOUTH
NTS	NOT TO SCALE
OC	ON CENTER
OD	OUTSIDE DIAMETER
OF	OVERFLOW
O.F.	OUTSIDE FACE
OPNG	OPENING
OPP	OPPOSITE
OZ	OUNCE
PC	POINT OF CURVE
PCF	POUNDS PER CUBIC FOOT
PI	POINT OF INTERSECTION
PL	PROPERTY LINE
PLYWD	PLYWOOD
PMP	PUMP
PNL	PANEL
POE	POINT OF ENDING
PP	POWER POLE
PR	PAIR
PRC	POINT OF REVERSE CURVE
PRCST	PRECAST
PRES	PRESSURE
PRI	PRIMARY
PROP	PROPERTY
PSF	POUNDS PER SQUARE FOOT
PSI	POUNDS PER SQUARE INCH
PSIG	POUNDS PER SQUARE INCH, GAUGE
PT	POINT OF TANGENCY
PT	PRESSURE TREATED
PVI	POINT OF VERTICAL INTERSECTION
PVMT	PAVEMENT
PVT	POINT OF VERTICAL TANGENCY
R OR RAD	RADIUS
RC	REINFORCED CONCRETE
RDCR	REDUCER
REF	REFER OR REFERENCE
REINF	REINFORCED, REINFORCING, REINFORCE
REQD	REQUIRED
RH	RIGHT HAND
RHR	RIGHT HAND REVERSE
RPE	REINFORCED POLYETHYLENE
RST	REINFORCING STEEL
RT	RIGHT
RTN	RETURN
R/W	RIGHT OF WAY
S	SWITCH
SB	SEDIMENT BASIN
SCHED	SCHEDULE
SEC	SECONDARY
SED	SEDIMENTATION
SH	SHEET
SIM	SIMILAR
SPEC, SPECS	SPECIFICATIONS
SQ	SQUARE
SQ FT	SQUARE FOOT, FEET
SQ IN	SQUARE INCH
ST	STRAIGHT
STA	STATION
STD	STANDARD
STL	STEEL
STRUCT	STRUCTURE
T&B	TOP AND BOTTOM
TAN	TANGENT
TBC	TEMPORARY BYPASS CHANNEL
TECH	TECHNICAL
TEL	TELEPHONE
TEMP	TEMPORARY, TEMPERATURE
THK	THICKNESS
THRU	THROUGH
TOC	TOP OF CONCRETE
TOS	TOP OF SLAB
TOW	TOP OF WALL
TP	TURNING POINT
TRANSV	TRANSVERSE
TX	TRANSFORMER
TYP	TYPICAL
UON	UNLESS OTHERWISE NOTED
VC	VERTICAL CURVE
VERT	VERTICAL
VPC	POINT OF VERTICAL CURVATURE
VPI	POINT OF VERTICAL INTERSECTION
VPT	POINT OF VERTICAL TANGENT
W	WEST
W/	WITH

NOTES:

1. CONTACT ENGINEER FOR ABBREVIATIONS USED BUT NOT SHOWN ON THIS DRAWING.

APPROVED FOR CONSTRUCTION

LEGEND

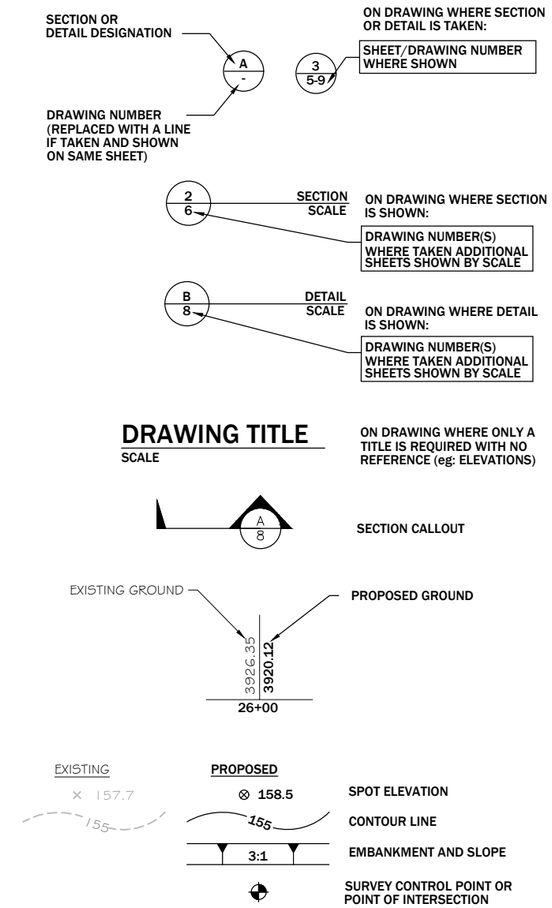

GENERAL SITE

1. SOURCE OF TOPOGRAPHY SHOWN ON THE CIVIL PLANS ARE FROM LIMITED SURVEY DATA. EXISTING CONDITIONS MAY VARY FROM THOSE SHOWN ON THESE PLANS. THE CONTRACTOR SHALL VERIFY EXISTING CONDITIONS AND ADJUST WORK PLAN ACCORDINGLY PRIOR TO BEGINNING CONSTRUCTION.
2. EXISTING TOPOGRAPHY, STRUCTURES, AND SITE FEATURES ARE SHOWN SCREENED AND/OR LIGHT-LINED. NEW FINISH GRADE, STRUCTURES, AND SITE FEATURES ARE SHOWN HEAVY-LINED.
3. HORIZONTAL DATUM: MONTANA STATE PLANE COORDINATES NAD83, INTERNATIONAL SURVEY FEET.
4. VERTICAL DATUM: N.A.V.D. 88, U.S. SURVEY FEET.
5. MAINTAIN, RELOCATE, OR REPLACE EXISTING SURVEY MONUMENTS, CONTROL POINTS, AND STAKES WHICH ARE DISTURBED OR DESTROYED. PERFORM THE WORK TO PRODUCE THE SAME LEVEL OF ACCURACY AS THE ORIGINAL MONUMENT(S) IN A TIMELY MANNER, AND AT THE CONTRACTOR'S EXPENSE.
6. DIGITAL FILES FOR CONSTRUCTION STAKING WILL BE PROVIDED BY ENGINEER TO CONTRACTOR AFTER PROJECT IS AWARDED.
7. STAGING AREA SHALL BE FOR CONTRACTOR'S EMPLOYEE PARKING, CONTRACTOR'S TRAILERS AND ON-SITE STORAGE OF MATERIALS.
8. PROVIDE TEMPORARY FENCING AS NECESSARY TO MAINTAIN SECURITY AT ALL TIMES.
9. ELEVATIONS GIVEN ARE TO FINISH GRADE UNLESS OTHERWISE NOTED.
10. SLOPE UNIFORMLY BETWEEN CONTOURS AND SPOT ELEVATIONS SHOWN.
11. EROSION AND SEDIMENTATION CONTROL MEASURES SHALL BE MAINTAINED AND INSPECTED AS STATED IN THE APPROVED EROSION AND SEDIMENTATION PLAN APPROVED IN THE STORMWATER DISCHARGE PERMIT.
12. ALL CONTRACTORS AND SUBCONTRACTORS SHALL COMPLY WITH THE FIELD SAFETY INSTRUCTIONS APPROVED (FSI)FOR THIS SITE AT ALL TIMES.
13. EXISTING SITE DRAINAGE FLOW PATTERNS/DIRECTIONS SHALL BE MAINTAINED UNLESS OTHERWISE INDICATED ON THE PLANS.
14. CONSTRUCTION ACTIVITY BY OTHERS MAY IMPACT THE WORK CONTEMPLATED WITHIN THIS PACKAGE. THE CONTRACTOR SHALL NOTIFY THE ENGINEER IMMEDIATELY IF A CONFLICT ARISES RELATING TO THE PROGRESS OF THE WORK. FINAL COORDINATION/RESOLUTION OF SUCH CONFLICTS SHALL BE THE RESPONSIBILITY OF THE CONTRACTORS INVOLVED.
15. EXISTING FEATURES AND UTILITIES ARE SHOWN ON THE PLANS BASED UPON INFORMATION AVAILABLE AT THE TIME THE PLANS WERE PREPARED. SHOULD UNIDENTIFIED UTILITY OR SERVICE ELEMENTS BE ENCOUNTERED, NOTIFY THE ENGINEER AND THE APPROPRIATE UTILITY OWNER IMMEDIATELY.
16. ACCESS TO THE GENERAL SITE, AND TO SPECIFIC WORK AREAS SHALL BE LIMITED TO THE LOCATIONS SHOWN ON THE PLANS.
17. WATER FOR CONSTRUCTION ACTIVITIES SHALL BE OBTAINED BY THE CONTRACTOR AT THEIR SOLE EXPENSE. ANY AND ALL PERMITS REQUIRED SHALL BE THE RESPONSIBILITY OF THE CONTRACTOR.

GENERAL NOTE:

1. THIS IS A STANDARD LEGEND SHEET. THEREFORE, NOT ALL OF THE INFORMATION SHOWN MAY BE USED ON THIS PROJECT.

REVISION: DATE:	BY:	DESC:

DRAWN BY:	JJJ
DESIGNED BY:	CEB
CHECKED BY:	GEA
APPROVED BY:	GEA
PROJECT NO:	
DATE:	01/17/17

DISPLAYED AS:	
COORD SYS/ZONE:	NA
DATUM:	NA
UNITS:	NA
SOURCE:	PIONEER

SCALE IN FEET
0 NA

MONTANA FISH, WILDLIFE & PARKS
BANNACK STATE PARK
DETENTION BASIN

BANNACK
LEGEND AND
ABBREVIATIONS

PIONEER TECHNICAL SERVICES, INC.
106 PRONGHORN TRAIL, SUITE A
BOZEMAN, MT 59718
(406) 388-8578

SHEET
1-2

APPROVED
FOR CONSTRUCTION

MONTANA STATE PARKS SHOP AREA

BRIDGE, 5 TON LIMIT

EXISTING FLUME

REMOVE EXISTING BRIDGE, TEMPORARILY PLACE (2) 24"Ø CULVERTS FOR CONSTRUCTION ACCESS. TO BE REMOVED POST CONSTRUCTION

PROPOSED TRAIL RE-ALINGMENT

PROPOSED STAGING AREA

ACTIVE STATE PARK VISITOR AREA AND ARCHEOLOGICAL SITE, CONSTRUCTION ACTIVITY IS PROHIBITED WITH THE EXCEPTION OF ON-ROAD TRAVEL.

EXISTING HANGMAN'S GULCH ROAD, TO BE RECLAIMED AT PROJECT COMPLETION

CP-4

CP-3

CP-2

GALLOWS

CP-5

GRASSHOPPER CREEK

BANNACK

PROPOSED BASIN LOCATION

PROPOSED MATERIAL STOCKPILE AREA

HANGMAN'S GULCH CHANNEL

HOTEL MEADE

SURVEYED AREAS

BANNACK ROAD

ROUTE 1 CONSTRUCTION ACCESS FOR EQUIPMENT WHICH GROSS WEIGHT IS ABOVE BRIDGE LIMITS (5 TON LOAD).

ROUTE 2 CONSTRUCTION ACCESS/HAUL ROUTE

~26 MILES TO DILLON

GRASSHOPPER CREEK

BRIDGE, 5 TON LIMIT

Image courtesy of Nearmap, Geoeye, Sio, © 2016 Microsoft Corporation

LEGEND

- ACCESS ROUTE 1
- ACCESS ROUTE 2
- PROPOSED DETENTION BASIN
- PROPOSED RE-ALIGNED ROAD
- PROPOSED STAGING AREA
- PROPOSED MATERIAL STOCKPILE AREA
- STATE PARK VISITOR AREA
- CP-X EXISTING CONTROL POINTS

CP	NORTHING	EASTING	DESCRIPTION
CP-2	353620.44	1067195.30	REBAR
CP-3	354188.23	1067311.48	2 INCH ALUMINUM CAP
CP-4	354294.77	1067360.58	2 INCH ALUMINUM CAP
CP-5	354351.98	1067057.45	2 INCH ALUMINUM CAP

NOTES:
1. SITE CONSTRUCTION ACCESS AND PROJECT TRAFFIC CONTROL PER TECHNICAL SPECIFICATIONS.

REVISION:

DATE:	BY:	DESC:

DRAWN BY: JJJ
DESIGNED BY: CEB
CHECKED BY: GEA
APPROVED BY: GEA
PROJECT NO:
DATE: 01/17/17

DISPLAYED AS:
COORD SYS/ZONE: MONTANA ST. PLANES
DATUM: NAD83, NAVD88
UNITS: INT. FEET
SOURCE: PIONEER/BING

N

SCALE IN FEET
0 150 300

MONTANA FISH, WILDLIFE & PARKS
BANNACK STATE PARK
DETENTION BASIN

BANNACK
SITE PLAN

PIONEER TECHNICAL SERVICES, INC.
106 PRONGHORN TRAIL, SUITE A
BOZEMAN, MT 59718
(406) 388-8578

SHEET
1-3

1/17/2017 3:44:17 PM G:\MTSP - BANNACK\DETENTION BASIN DETAIL DESIGN\DRAWINGS\CAD\100%(011617) CONST DRAWINGS\BNACK-CO-100-PLN-001-16.DWG

APPROVED
FOR CONSTRUCTION

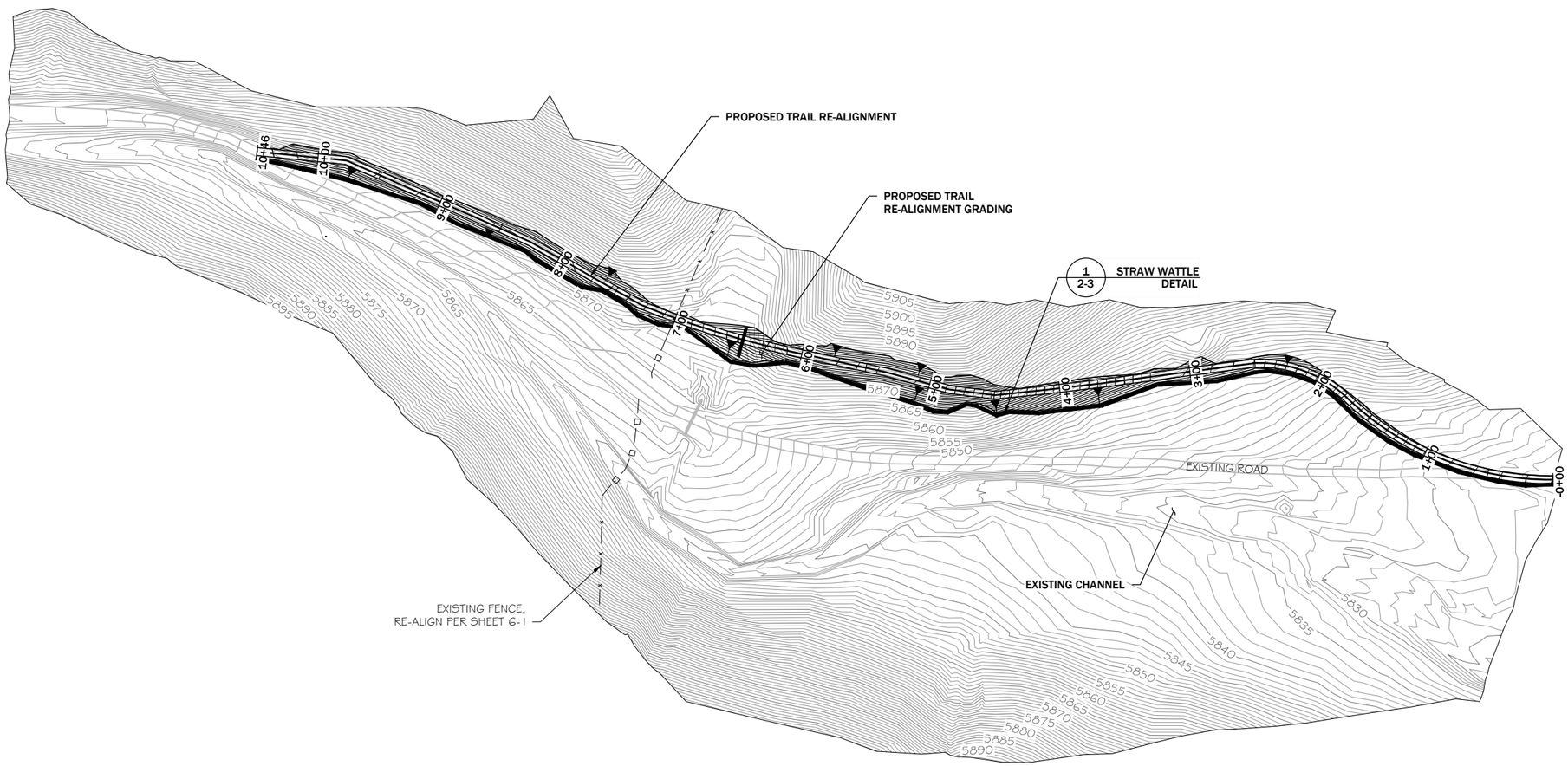

NOTE:
1. INSTALL WATTLE PRIOR TO ANY EXCAVATION ACTIVITY.
2. INSTALL WATTLE AT BOTTOM OF UN-VEGETATED EXCAVATION SLOPES DOWN GRADIENT OF NEWLY RE-ALIGNED TRAIL WHERE RUNOFF FROM ACTIVE WORK AREA COULD FLOW TOWARDS EXISTING CHANNEL.

REVISION:

DATE:	BY:	DESC:

DRAWN BY: JBU
DESIGNED BY: CEB
CHECKED BY: GEA
APPROVED BY: GEA
PROJECT NO:
DATE: 01/17/17

DISPLAYED AS:
COORD SYS/ZONE: MONTANA ST. PLANES
DATUM: NAD83, NAVD88
UNITS: INT. FEET
SOURCE: PIONEER

SCALE IN FEET
0 50 100

MONTANA FISH, WILDLIFE & PARKS
BANNACK STATE PARK
DETENTION BASIN

BANNACK
DETENTION BASIN
TRAIL CONSTRUCTION
EROSION CONTROL
PLAN

PIONEER TECHNICAL SERVICES, INC.
106 PRONGHORN TRAIL, SUITE A
BOZEMAN, MT 59718
(406) 388-8578

SHEET
2-1

APPROVED
FOR CONSTRUCTION

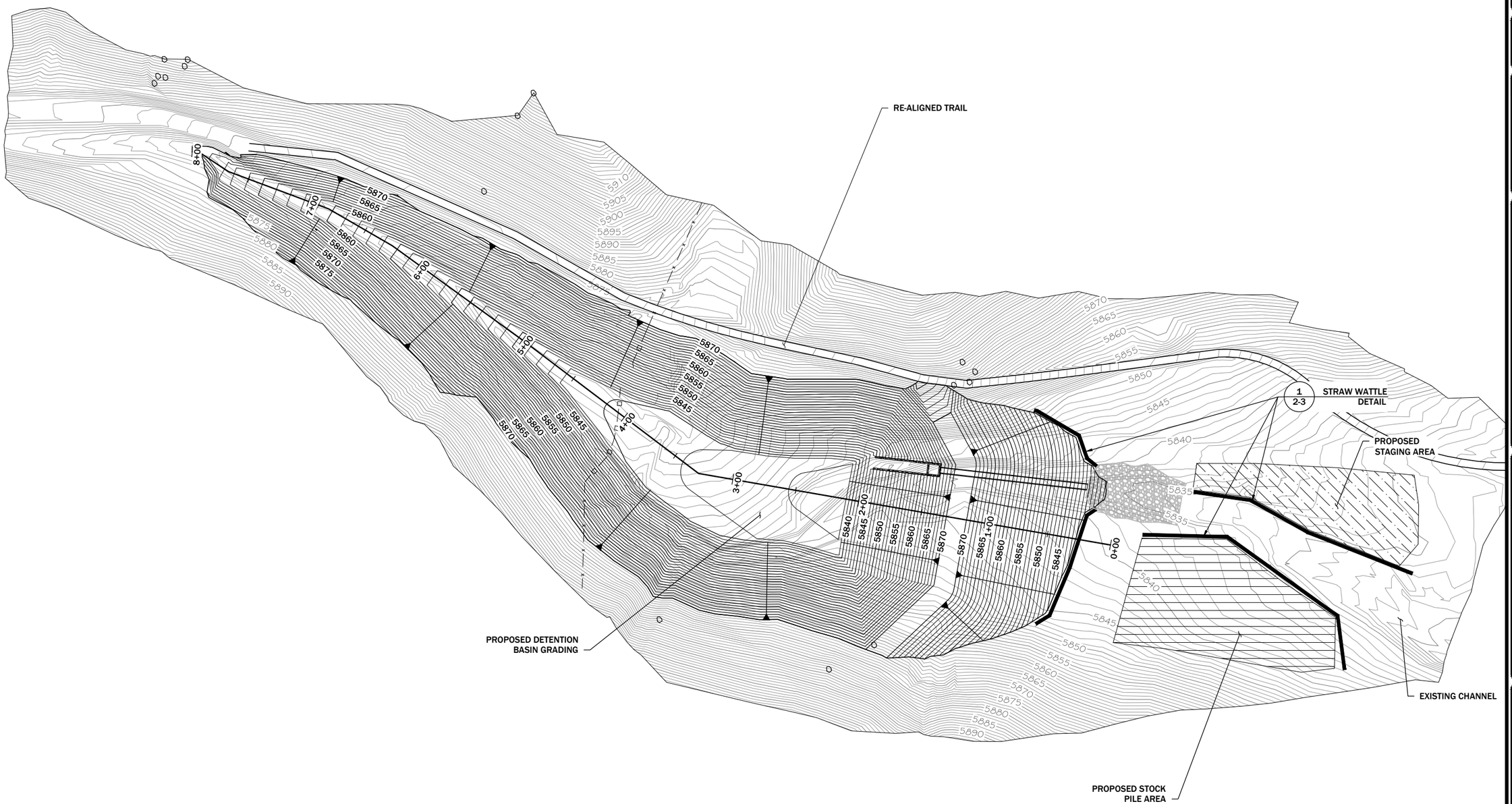

REVISION:

DATE:	BY:	DESC:

DRAWN BY: JBU
DESIGNED BY: CEB
CHECKED BY: GEA
APPROVED BY: GEA
PROJECT NO:
DATE: 01/17/17

DISPLAYED AS:
COORD SYS/ZONE: MONTANA ST. PLANES
DATUM: NAD83, NAVD88
UNITS: INT. FEET
SOURCE: PIONEER

SCALE IN FEET
0 40 80

MONTANA FISH, WILDLIFE & PARKS
BANNACK STATE PARK
DETENTION BASIN

BANNACK
DETENTION BASIN
EXCAVATION/
EMBANKMENT EROSION
CONTROL PLAN

PIONEER TECHNICAL SERVICES, INC.
106 PRONGHORN TRAIL, SUITE A
BOZEMAN, MT 59718
(406) 388-8578

SHEET
2-2

APPROVED
FOR CONSTRUCTION

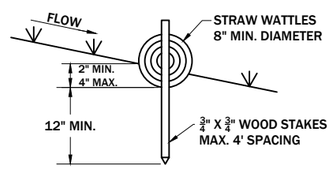

STRAW WATTLE INSTALLATION NOTES:

1. WHEN INSTALLING RUNNING LENGTHS OF WATTLES, BUTT THE SECOND WATTLE TIGHTLY AGAINST THE FIRST, DO NOT OVERLAP THE ENDS. STAKE THE WATTLES AT EACH END AND THREE TO FOUR FOOT ON CENTER.
2. STAKES SHOULD BE DRIVEN THROUGH THE MIDDLE OF THE WATTLE. LEAVING 2-3 INCHES OF THE STAKE PROTRUDING ABOVE THE WATTLE. A HEAVY SEDIMENT LOAD WILL TEND TO PICK THE WATTLE UP AND COULD PULL IT OFF THE STAKES IF THEY ARE DRIVEN DOWN TOO LOW.
3. WHEN STRAW WATTLES ARE USED FOR FLAT GROUND APPLICATIONS, DRIVE THE STAKES STRAIGHT DOWN. WHEN INSTALLING WATTLES ON SLOPES, DRIVE THE STAKES PERPENDICULAR TO THE SLOPE.
4. DRIVE THE FIRST END STAKE OF THE SECOND WATTLE AT AN ANGLE TOWARD THE FIRST WATTLE IN ORDER TO BUTT THEM TIGHTLY TOGETHER. PILOT BARS MAY BE NEEDED ON HARD OR ROCKY TERRAIN.
5. WATTLES SHALL BE INSTALLED PRIOR TO ANY LAND-DISTURBING ACTIVITIES.
6. WATTLES SHALL BE TRENCHED INTO THE GROUND A MIN OF 2".

WATTLE MAINTENANCE NOTES:

1. INSPECT WATTLES EVERY TWO WEEKS AND AFTER ANY SIGNIFICANT STORM EVENT. MAKE REPAIRS OR REMOVE ACCUMULATED SEDIMENT AS NECESSARY.
2. ACCUMULATED SEDIMENT SHALL BE REMOVED WHEN ACCUMULATED TO ONE HALF WATTLE DIAMETER.
3. WATTLES SHALL REMAIN IN PLACE UNTIL THE UPSLOPE DISTURBED AREA IS STABILIZED.

1 / 2-1 STRAW WATTLES (FIBER ROLLS)
DETAIL
NTS

REVISION:

DATE:	BY:	DESC:

DRAWN BY: JJJ
DESIGNED BY: CEB
CHECKED BY: GEA
APPROVED BY: GEA
PROJECT NO:
DATE: 01/17/17

DISPLAYED AS:
COORD SYS/ZONE: NA
DATUM: NA
UNITS: FEET
SOURCE: PIONEER

SCALE IN FEET
0 NTS

MONTANA FISH, WILDLIFE & PARKS
BANNACK STATE PARK
DETENTION BASIN

BANNACK
DETENTION BASIN
EROSION CONTROL/
BMP DETAILS

PIONEER TECHNICAL SERVICES, INC.
106 PRONGHORN TRAIL, SUITE A
BOZEMAN, MT 59718
(406) 388-8578

SHEET
2-3

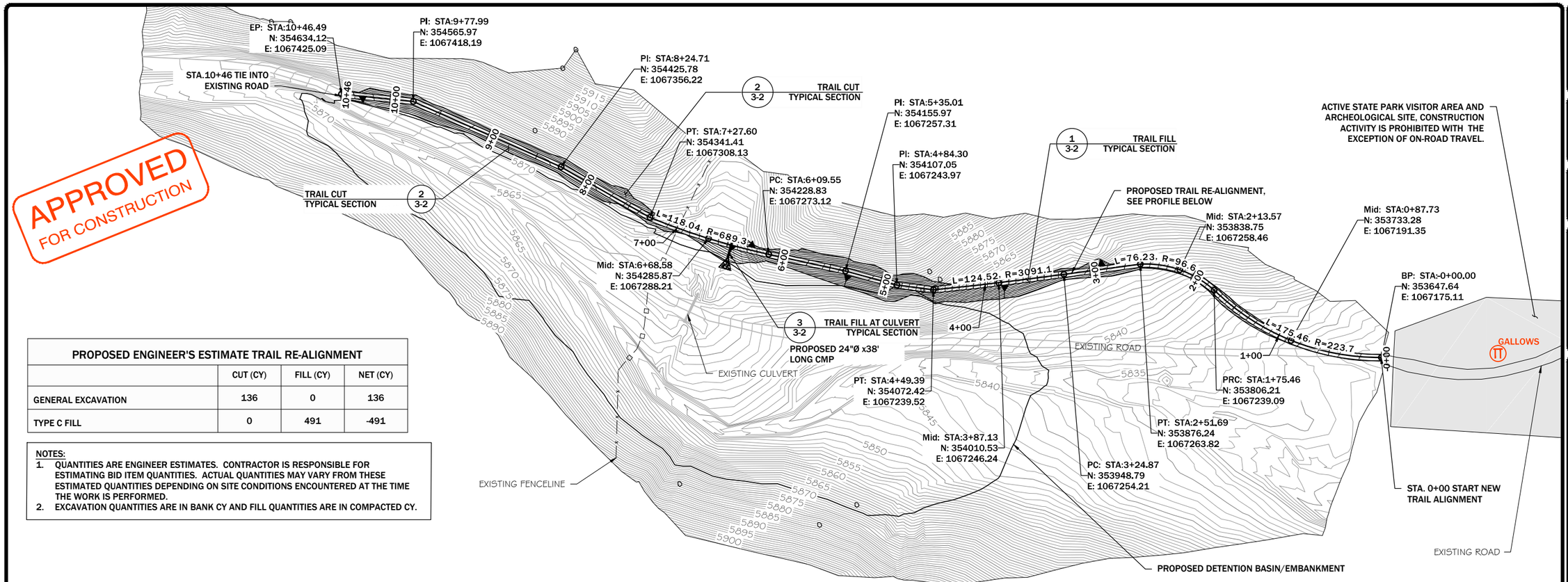

PROPOSED ENGINEER'S ESTIMATE TRAIL RE-ALIGNMENT			
	CUT (CY)	FILL (CY)	NET (CY)
GENERAL EXCAVATION	136	0	136
TYPE C FILL	0	491	-491

NOTES:
1. QUANTITIES ARE ENGINEER ESTIMATES. CONTRACTOR IS RESPONSIBLE FOR ESTIMATING BID ITEM QUANTITIES. ACTUAL QUANTITIES MAY VARY FROM THESE ESTIMATED QUANTITIES DEPENDING ON SITE CONDITIONS ENCOUNTERED AT THE TIME THE WORK IS PERFORMED.
2. EXCAVATION QUANTITIES ARE IN BANK CY AND FILL QUANTITIES ARE IN COMPACTED CY.

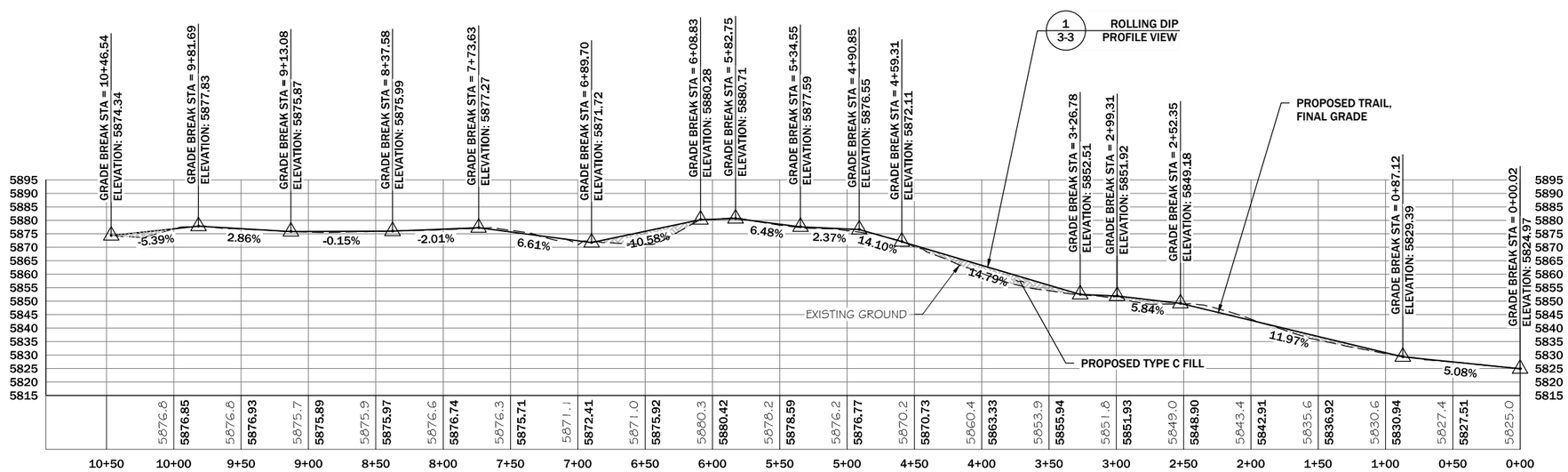

PROPOSED TRAIL PROFILE

SCALE: 1" = 100'

NOTES:
1. CONTRACTOR MAY ADJUST TRAIL ALIGNMENT TO FIT EXISTING TOPOGRAPHY WITH ENGINEER APPROVAL.

SCALE IN FEET 50 100

REVISION:

DATE:	BY:	DESC:

DRAWN BY: JJJ
DESIGNED BY: JJJ
CHECKED BY: CEB
APPROVED BY: GEA
PROJECT NO:
DATE: 01/17/17

DISPLAYED AS:
COORD SYS/ZONE: MONTANA ST. PLANES
DATUM: NAD83, NAVD88
UNITS: INT. FEET
SOURCE: PIONEER

SCALE IN FEET 0 50 100

MONTANA FISH, WILDLIFE & PARKS
BANNACK STATE PARK
DETENTION BASIN

BANNACK
TRAIL
PLAN AND PROFILE

PIONEER TECHNICAL SERVICES, INC.
106 PRONGHORN TRAIL, SUITE A
BOZEMAN, MT 59718
(406) 388-8578

SHEET
3-1

APPROVED
FOR CONSTRUCTION

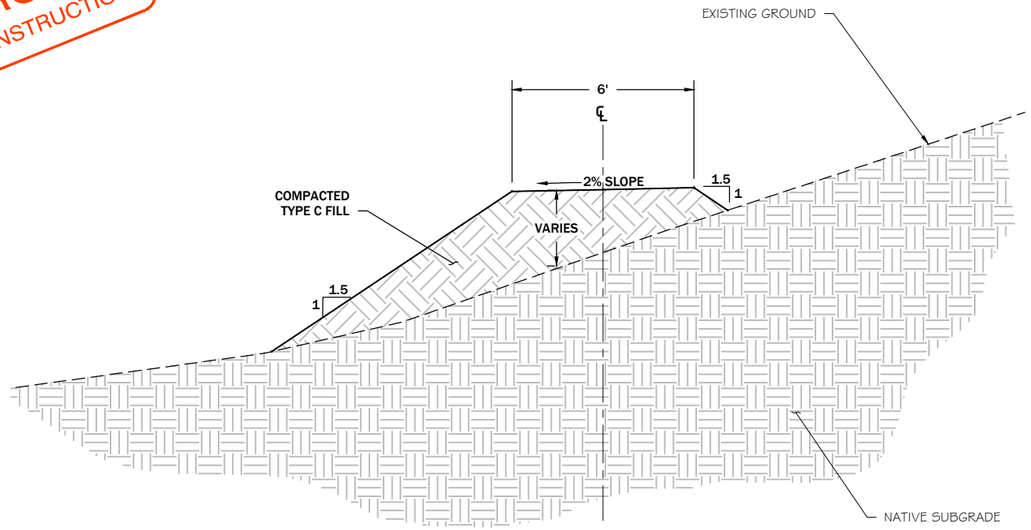

1 / 3-1 **TRAIL FILL TYPICAL SECTION**
SCALE: 1" = 5'
STA 0+00 TO STA 1+85
STA. 3+35 TO STA. 4+30

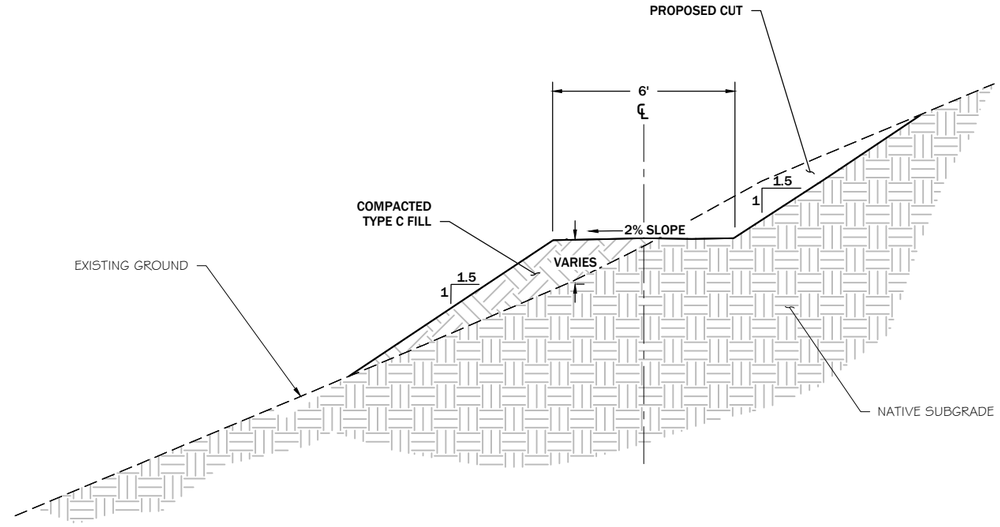

2 / 3-1 **TRAIL CUT TYPICAL SECTION**
SCALE: 1" = 5'
STA 1+85 TO STA 3+35
STA 4+30 TO STA 6+19
STA 7+08 TO END

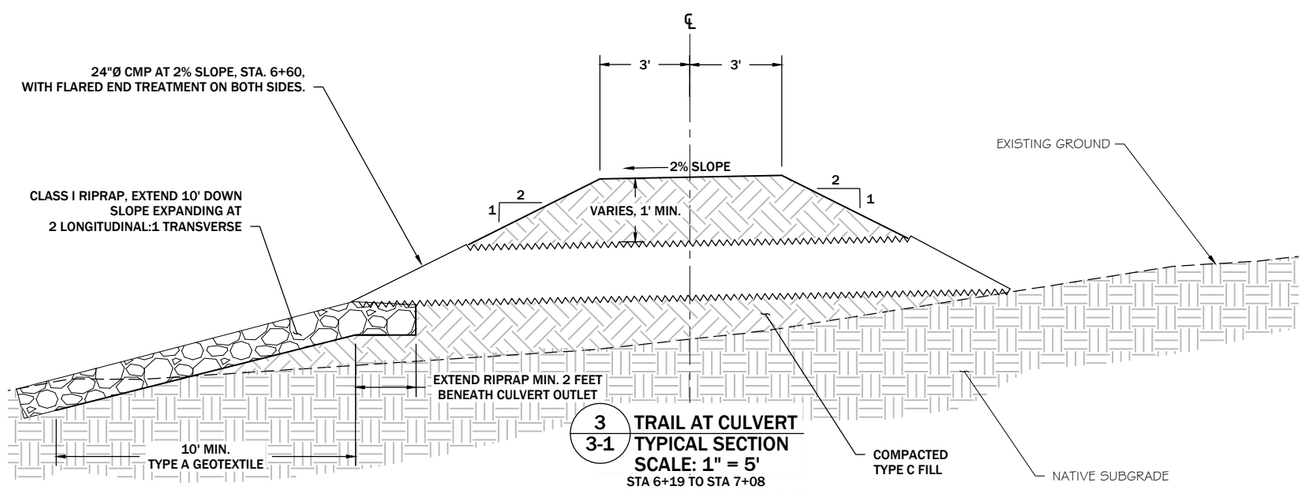

3 / 3-1 **TRAIL AT CULVERT TYPICAL SECTION**
SCALE: 1" = 5'
STA 6+19 TO STA 7+08
CULVERT SHOWN AT STA 6+60

REVISION:

DATE:	BY:	DESC:

DRAWN BY: JJJ
DESIGNED BY: JJJ
CHECKED BY: CEB
APPROVED BY: GEA
PROJECT NO:
DATE: 01/17/17

DISPLAYED AS:
COORD SYS/ZONE: NA
DATUM: NA
UNITS: NA
SOURCE: PIONEER

SCALE IN FEET
0

MONTANA FISH, WILDLIFE & PARKS
BANNACK STATE PARK
DETENTION BASIN

BANNACK
TRAIL
TYPICAL SECTIONS

PIONEER TECHNICAL SERVICES, INC.
106 PRONGHORN TRAIL, SUITE A
BOZEMAN, MT 59718
(406) 388-8578

SHEET
3-2

APPROVED
FOR CONSTRUCTION

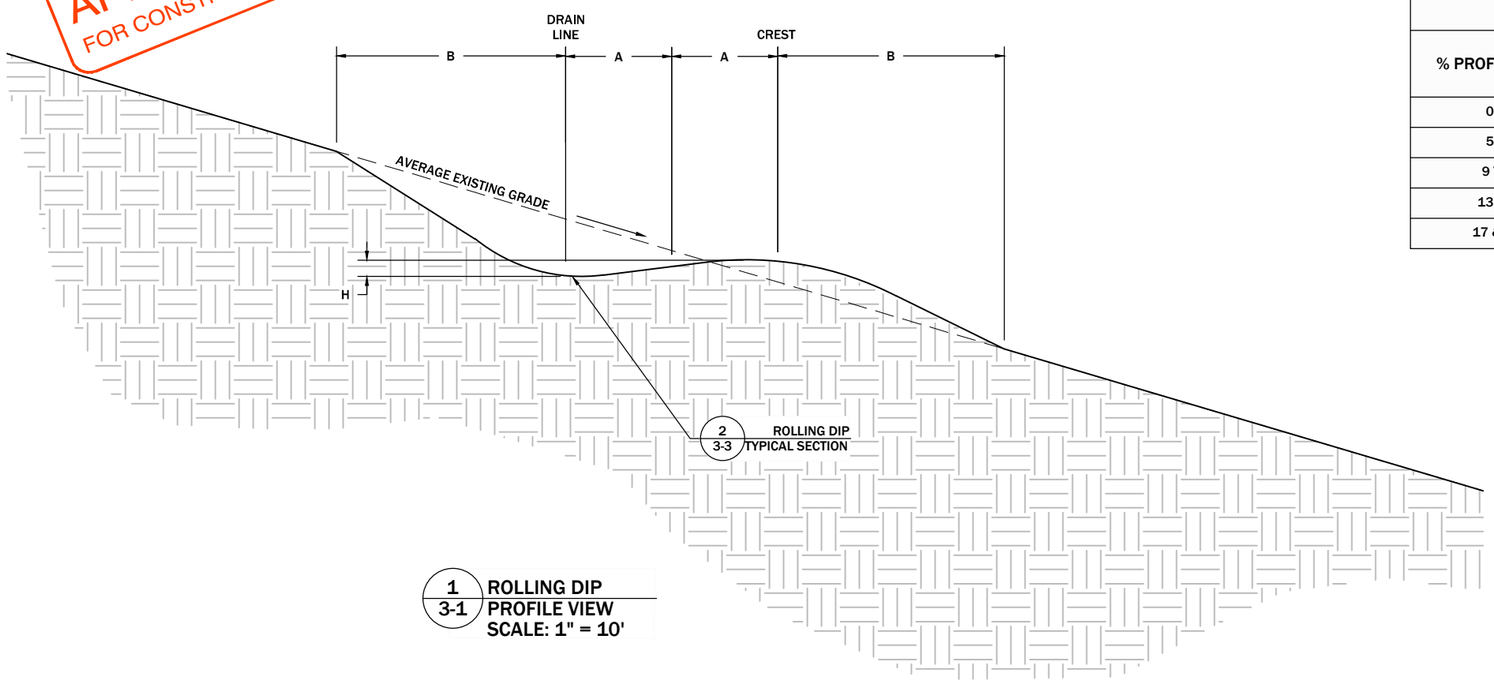

1 / 3-1 ROLLING DIP PROFILE VIEW
SCALE: 1" = 10'

ROLLING DIP CONSTRUCTION DIMENSIONS				
% PROFILE GRADE	LENGTH		DEPTH (H)	
	A	B	OUTSIDE EDGE	INSIDE EDGE
0 TO 4	6'	10'	1.5'	0.8'
5 TO 8	6'	10'	1.5'	0.8'
9 TO 12	6'	12'	1.5'	0.8'
13 TO 16	7'	15'	1.0'	0.8'
17 & OVER	7'	20'	1.0'	0.8'

NOTES:
1. CONSTRUCT MINIMUM (5) ROLLING DIPS ALONG PROPOSED TRAIL.
2. ROLLING DIPS SHOULD BE PLACED TO BREAK UP LONG CONSISTENT SLOPES AND TO MATCH EXISTING TOPOGRAPHY.

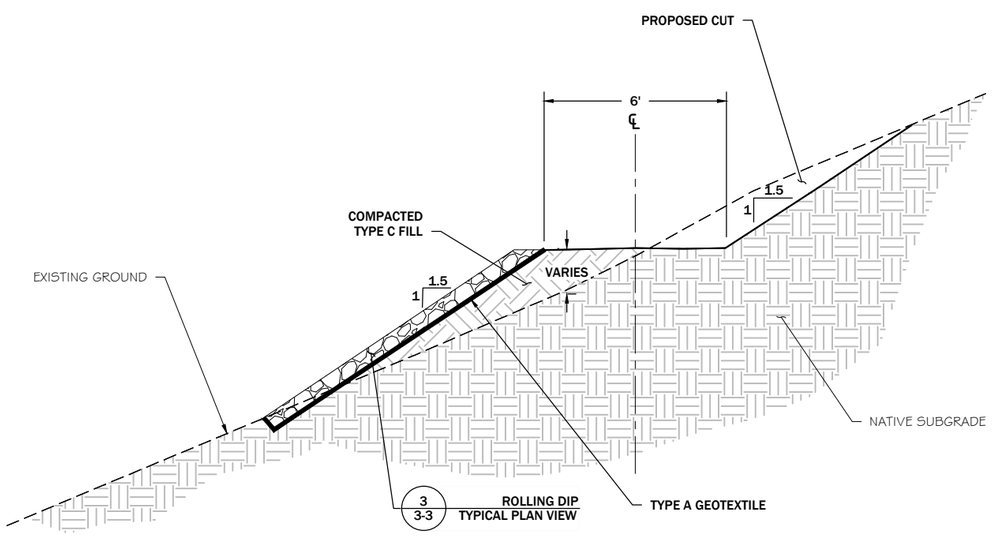

2 / 3-3 ROLLING DIP TYPICAL SECTION
SCALE: 1" = 5'

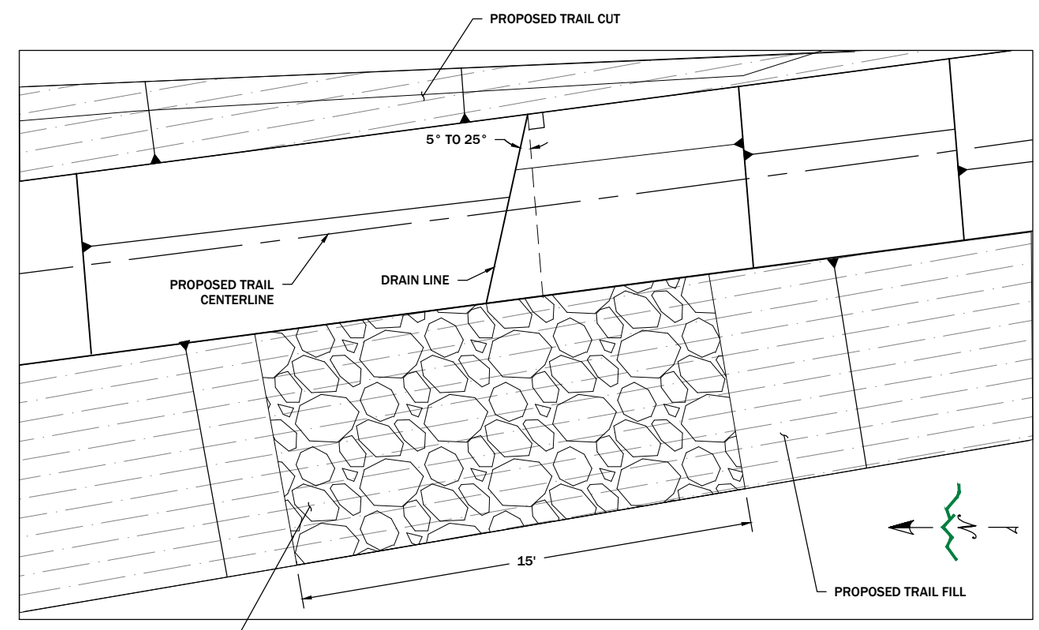

3 / 3-3 ROLLING DIP TYPICAL PLAN VIEW
SCALE: 1" = 10'

REVISION:
DATE: BY: DESC:

DRAWN BY: JJJ
DESIGNED BY: JJJ
CHECKED BY: CEB
APPROVED BY: GEA
PROJECT NO:
DATE: 01/17/17

DISPLAYED AS:
COORD SYS/ZONE: NA
DATUM: NA
UNITS: NA
SOURCE: PIONEER/USFS

SCALE IN FEET
0 NA NA

MONTANA FISH, WILDLIFE & PARKS
BANNACK STATE PARK
DETENTION BASIN

BANNACK TRAIL ROLLING DIP

PIONEER TECHNICAL SERVICES, INC.
106 PRONGHORN TRAIL, SUITE A
BOZEMAN, MT 59718
(406) 388-8578

SHEET 3-3

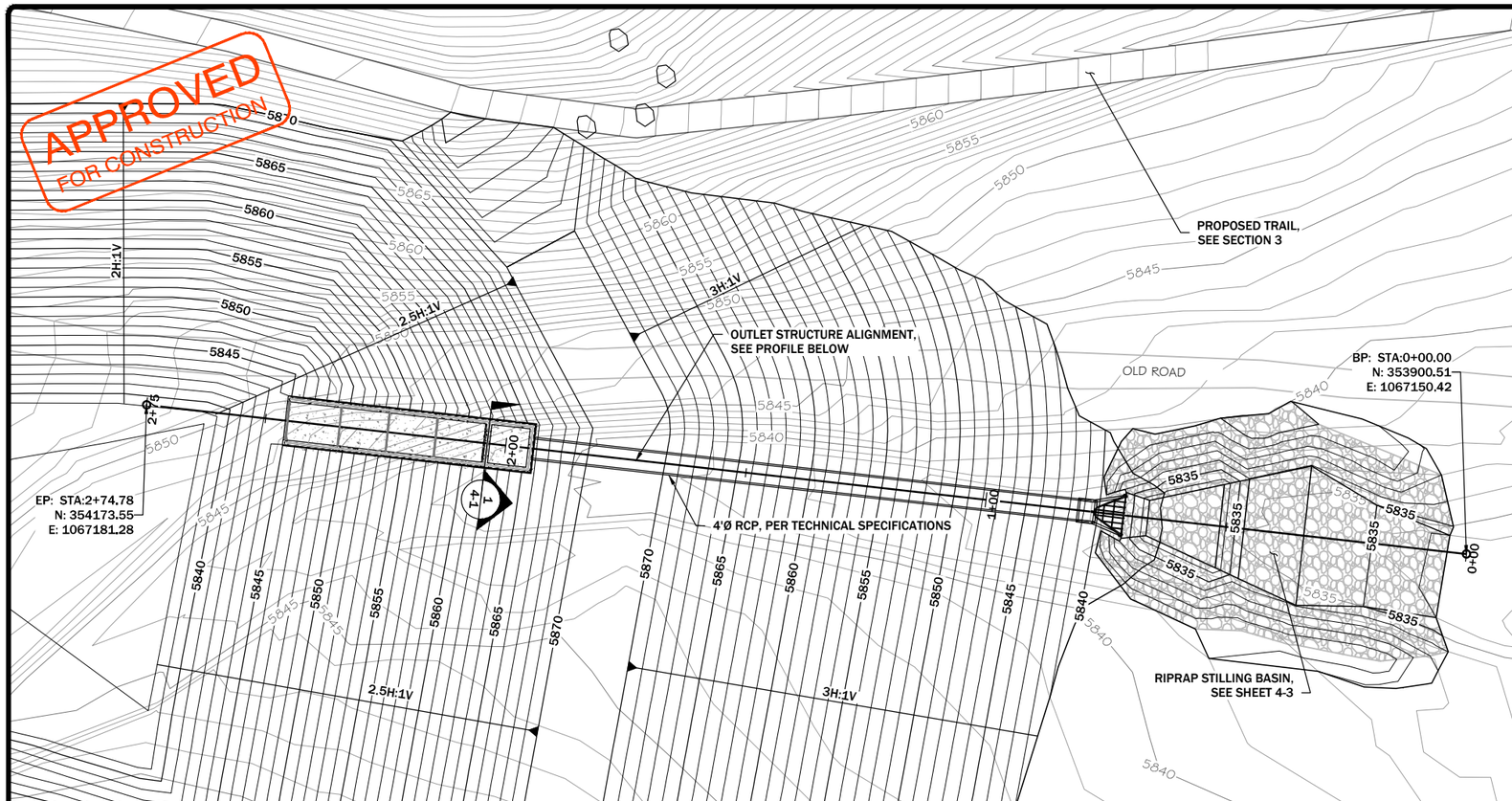

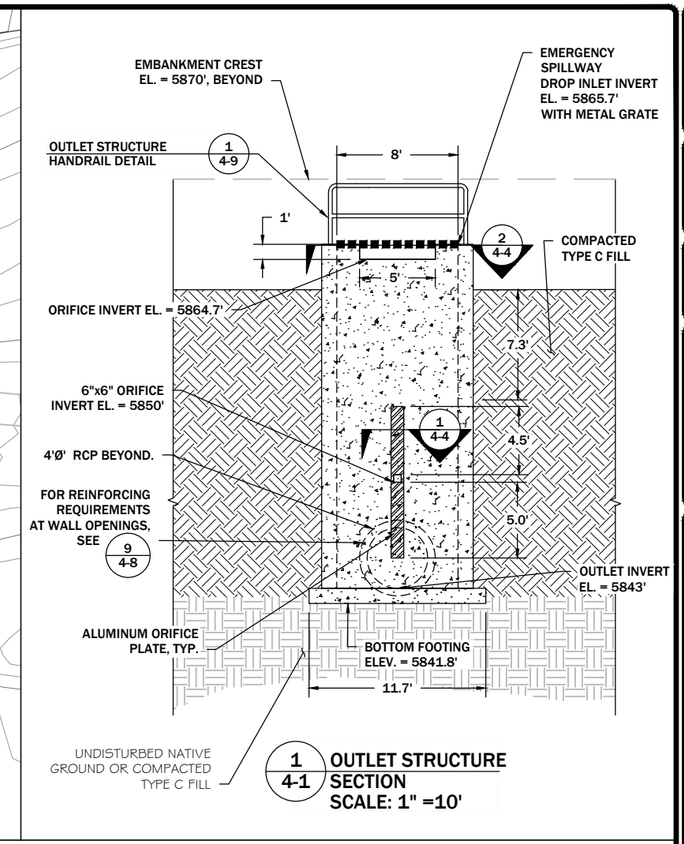

1 / 4-1 OUTLET STRUCTURE SECTION
SCALE: 1" =10'

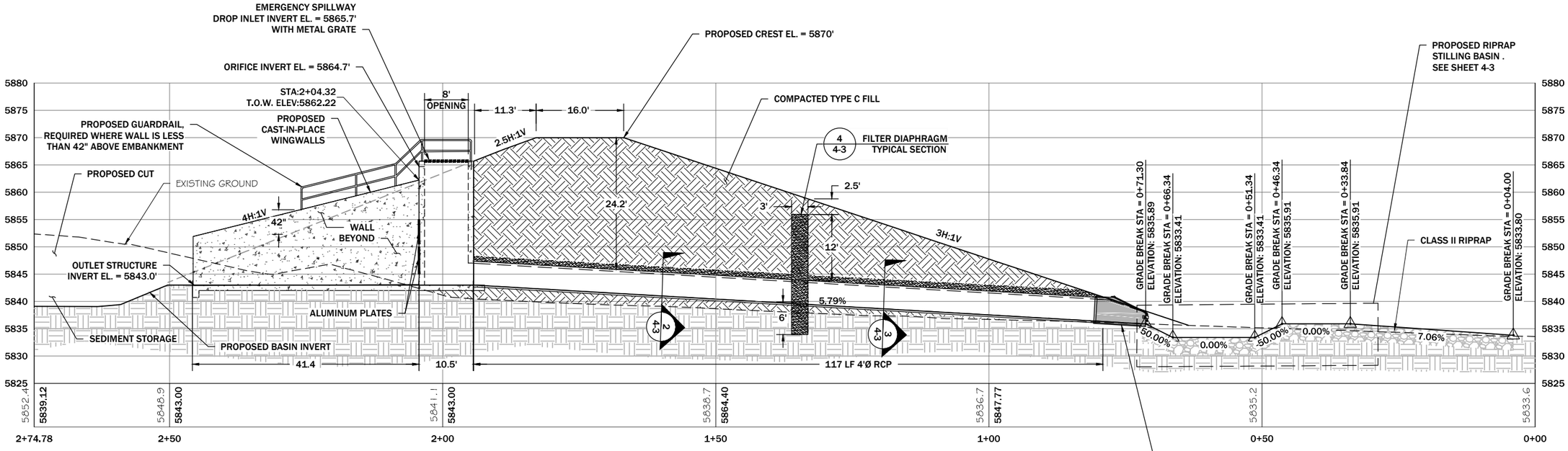

OUTLET STRUCTURE PROFILE

SCALE: 1" = 20'

REVISION: DATE:	BY:	DESC:

DRAWN BY: JJJ
DESIGNED BY: CEB
CHECKED BY: GEA
APPROVED BY: GEA
PROJECT NO:
DATE: 01/17/17

DISPLAYED AS:
COORD SYS/ZONE: MONTANA ST. PLANES
DATUM: NAD83, NAVD88
UNITS: INT. FEET
SOURCE: PIONEER

SCALE IN FEET
0 50 100

MONTANA FISH, WILDLIFE & PARKS
BANNACK STATE PARK
DETENTION BASIN

BANNACK
DETENTION BASIN
OUTLET STRUCTURE
PLAN AND PROFILE

PIONEER TECHNICAL SERVICES, INC.
106 PRONGHORN TRAIL, SUITE A
BOZEMAN, MT 59718
(406)388-8578

SHEET
4-1

APPROVED
FOR CONSTRUCTION

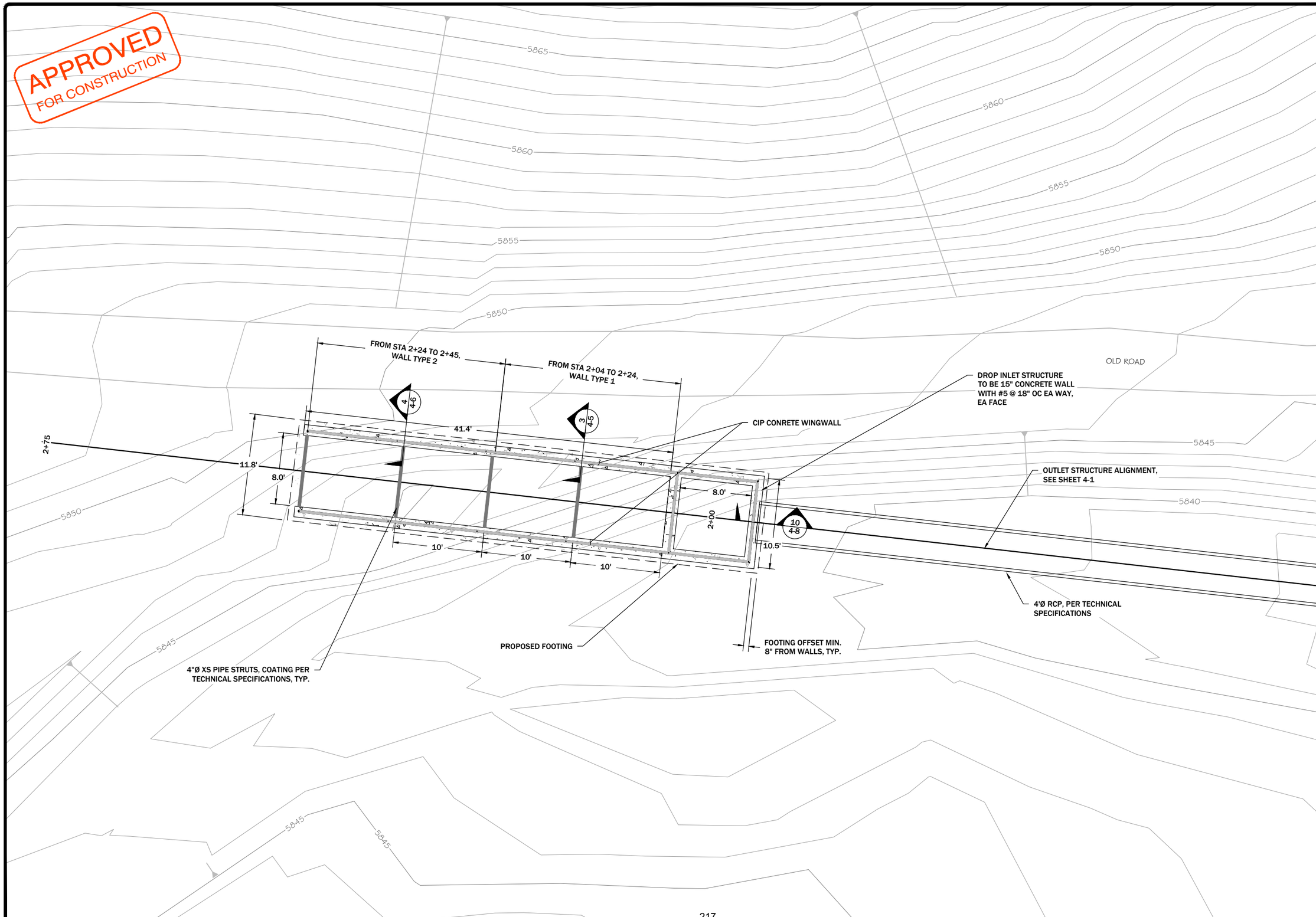

REVISION:

DATE:	BY:	DESC:

DRAWN BY: JJJ
DESIGNED BY: CEB
CHECKED BY: GEA
APPROVED BY: GEA
PROJECT NO:
DATE: 01/17/17

DISPLAYED AS:
COORD SYS/ZONE: MONTANA ST. PLANES
DATUM: NAD83, NAVD88
UNITS: INT. FEET
SOURCE: PIONEER

SCALE IN FEET
0 5 10

MONTANA FISH, WILDLIFE & PARKS
BANNACK STATE PARK
DETENTION BASIN

BANNACK
DETENTION BASIN
OUTLET STRUCTURE
DETAIL

PIONEER TECHNICAL SERVICES, INC.
106 PRONGHORN TRAIL, SUITE A
BOZEMAN, MT 59718
(406) 388-8578

SHEET
4-2

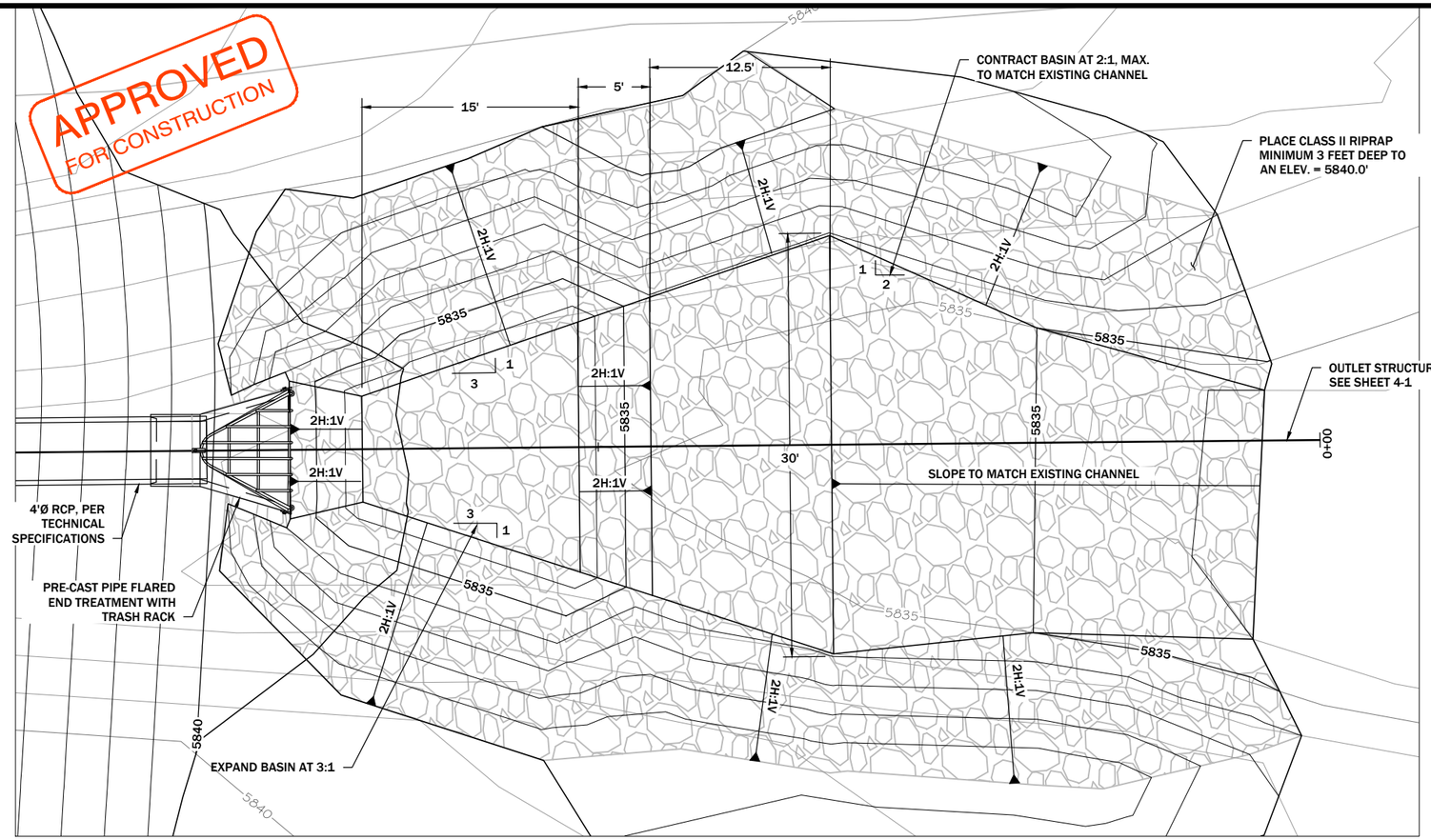

1 / 4-1 STILLING BASIN PLAN VIEW
SCALE: 1" =5'

NOTES:
1. PLACE TYPE A GEOTEXTILE BENEATH ALL RIPRAP.
2. SEE SHEET 4-1 FOR STILLING BASIN PROFILE AND INVERT ELEVATIONS

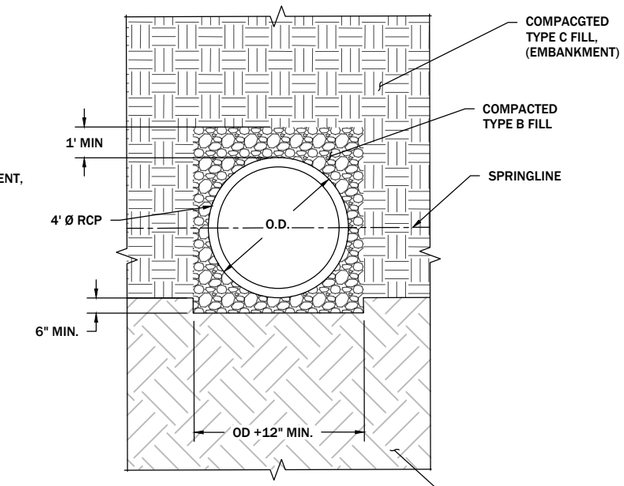

2 / 4-1 PIPE BEDDING & BACKFILL SECTION
SCALE: 1" = 5'
STA: START TO 1+36

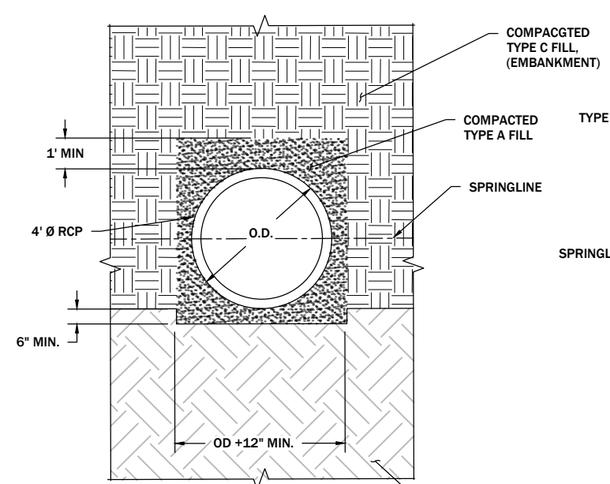

3 / 4-1 PIPE BEDDING & BACKFILL SECTION
SCALE: 1" = 5'
STA: 1+33 TO END

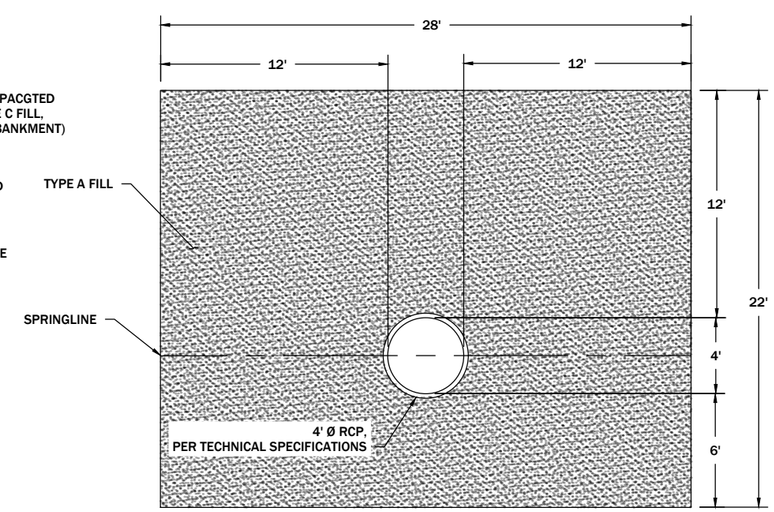

4 / 4-1 FILTER DIAPHRAGM TYPICAL SECTION
NTS

REVISION:

DATE:	BY:	DESC:

DRAWN BY: JJJ
DESIGNED BY: JJJ
CHECKED BY: CEB
APPROVED BY: GEA
PROJECT NO:
DATE: 01/17/17

DISPLAYED AS:
COORD SYS/ZONE: NA
DATUM: NA
UNITS: FEET
SOURCE: PIONEER

SCALE IN FEET
0 NTS

MONTANA FISH, WILDLIFE & PARKS
BANNACK STATE PARK
DETENTION BASIN

BANNACK
DETENTION BASIN
STILLING BASIN
AND PIPE DETAILS

PIONEER TECHNICAL SERVICES, INC.
106 PRONGHORN TRAIL, SUITE A
BOZEMAN, MT 59718
(406) 388-8578

SHEET
4-3

APPROVED
FOR CONSTRUCTION

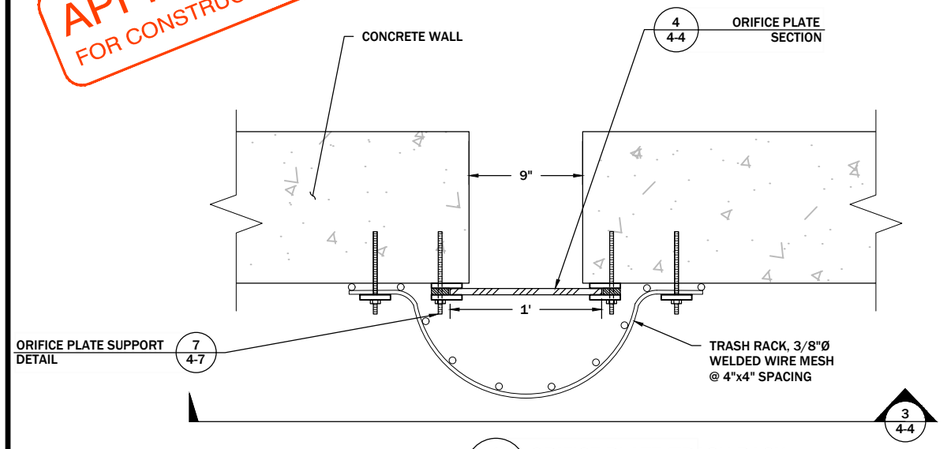

1 / 4-1 ORIFICE PLATE/TRASH RACK
SECTION
SCALE: 1" =1'

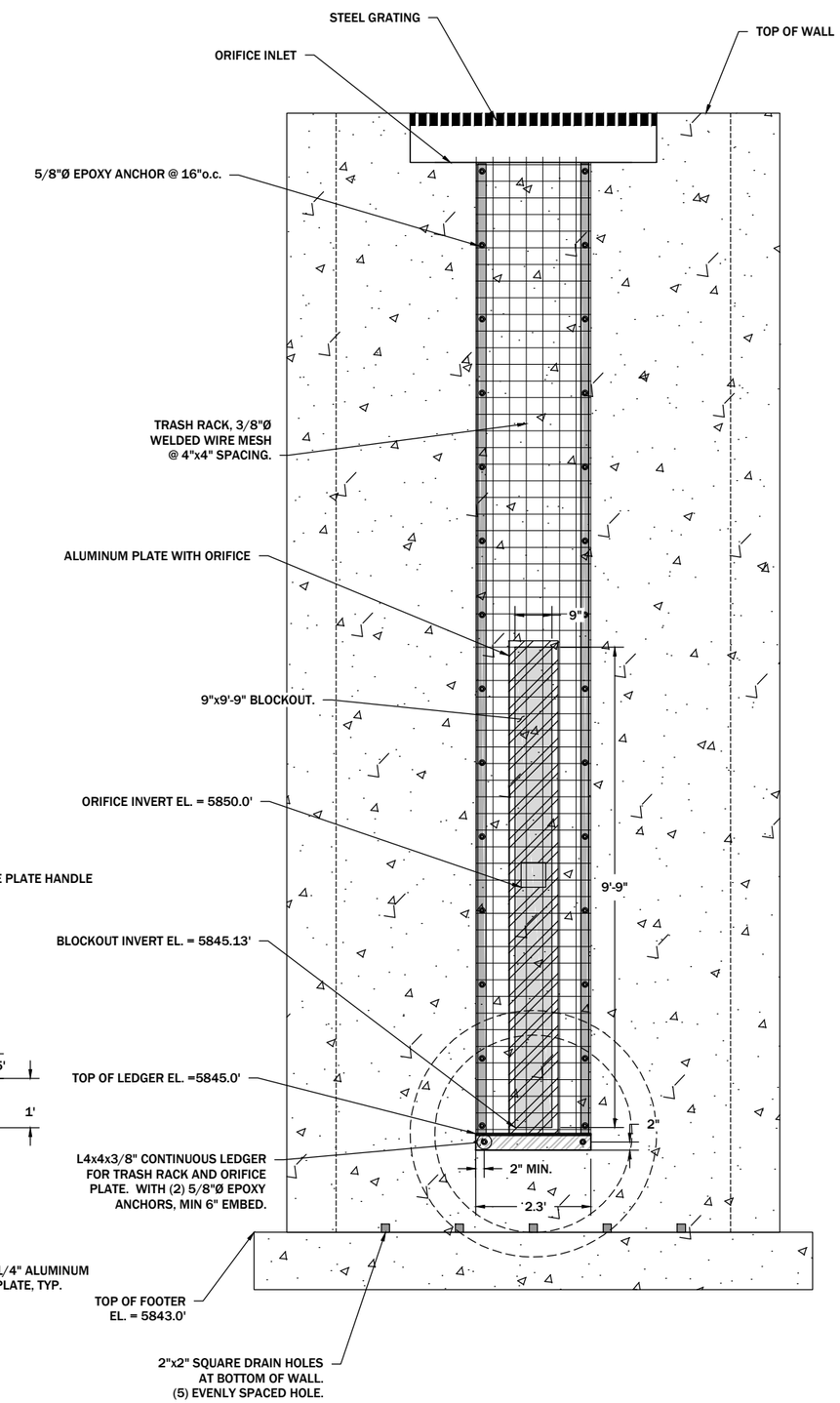

3 / 4-4 TRASH RACK
SECTION
SCALE: 1" =3'

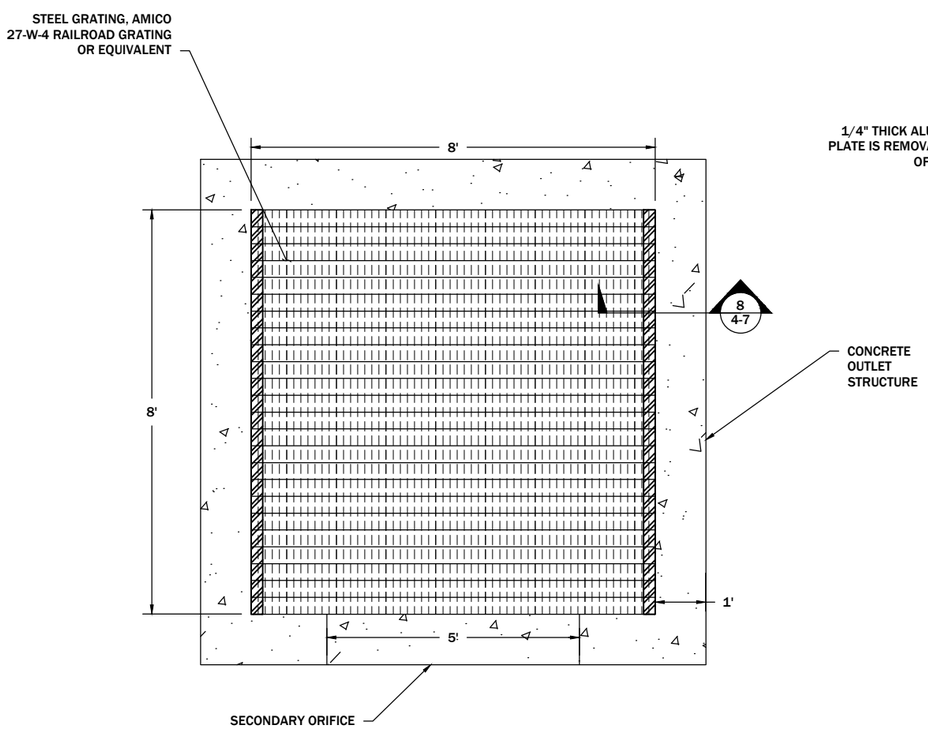

2 / 4-1 DROP INLET
SECTION
SCALE: 1" =3'

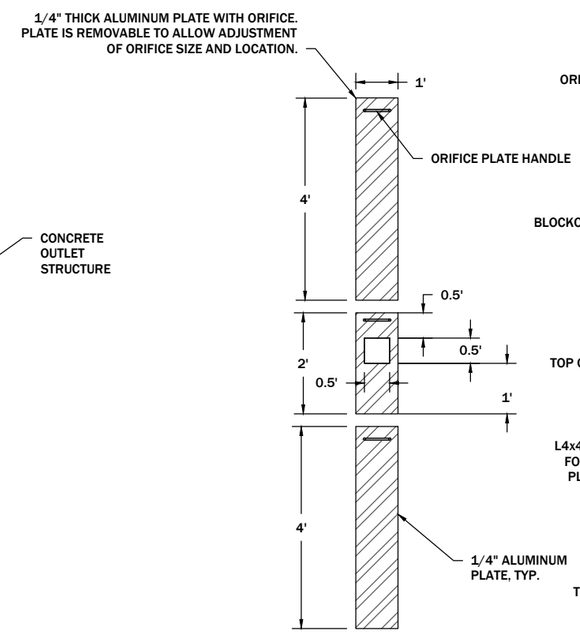

4 / 4-4 ORIFICE PLATE
SECTION
SCALE: 1" =3'

REVISION:		
DATE:	BY:	DESC:

DRAWN BY: JJJ
DESIGNED BY: CEB
CHECKED BY: GEA
APPROVED BY: GEA
PROJECT NO:
DATE: 01/17/17

DISPLAYED AS:
COORD SYS/ZONE: NA
DATUM: NA
UNITS: FEET
SOURCE: PIONEER

SCALE IN FEET
0 NTS

MONTANA FISH, WILDLIFE & PARKS
BANNACK STATE PARK
DETENTION BASIN

BANNACK
DETENTION BASIN
OUTLET STRUCTURE
DETAILS

PIONEER TECHNICAL SERVICES, INC.
106 PRONGHORN TRAIL, SUITE A
BOZEMAN, MT 59718
(406) 388-8578

SHEET
4-4

REBAR LAP LEGEND

BAR DIAMETER	LAP (INCHES)
#3	19"
#4	24"
#5	30"
#6	36"
#7	54"
#8	62"

ADDITIONAL REMARKS:

1. 4000 PSI CONCRETE CLASS 'B' LAP

1 REBAR LAP SCHEDULE

SCALE: NTS

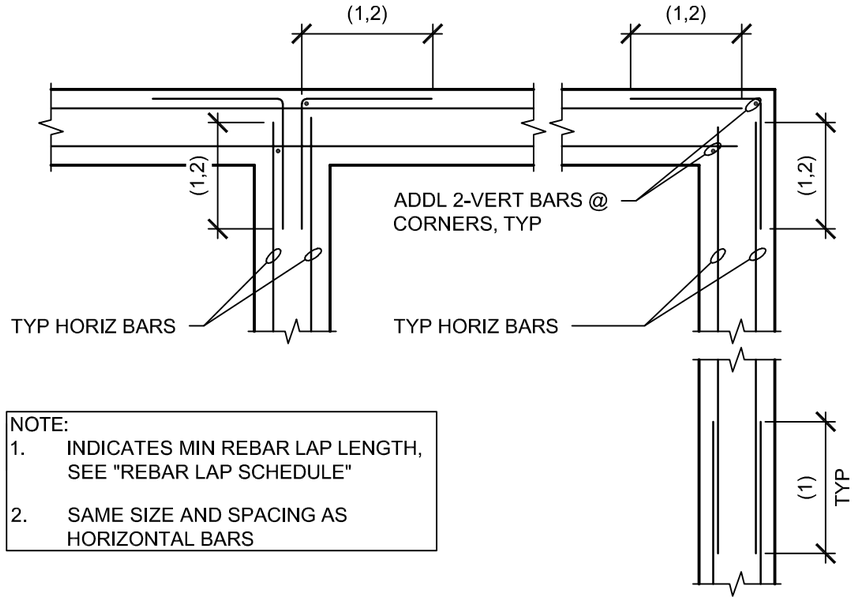

NOTE:
1. INDICATES MIN REBAR LAP LENGTH, SEE "REBAR LAP SCHEDULE"
2. SAME SIZE AND SPACING AS HORIZONTAL BARS

2 WALL REINF AT INT & CORNER- DBL MAT

SCALE: NTS

NOTE:
INSTALL PIPE STRUTS BEFORE BACKFILLING WING WALLS

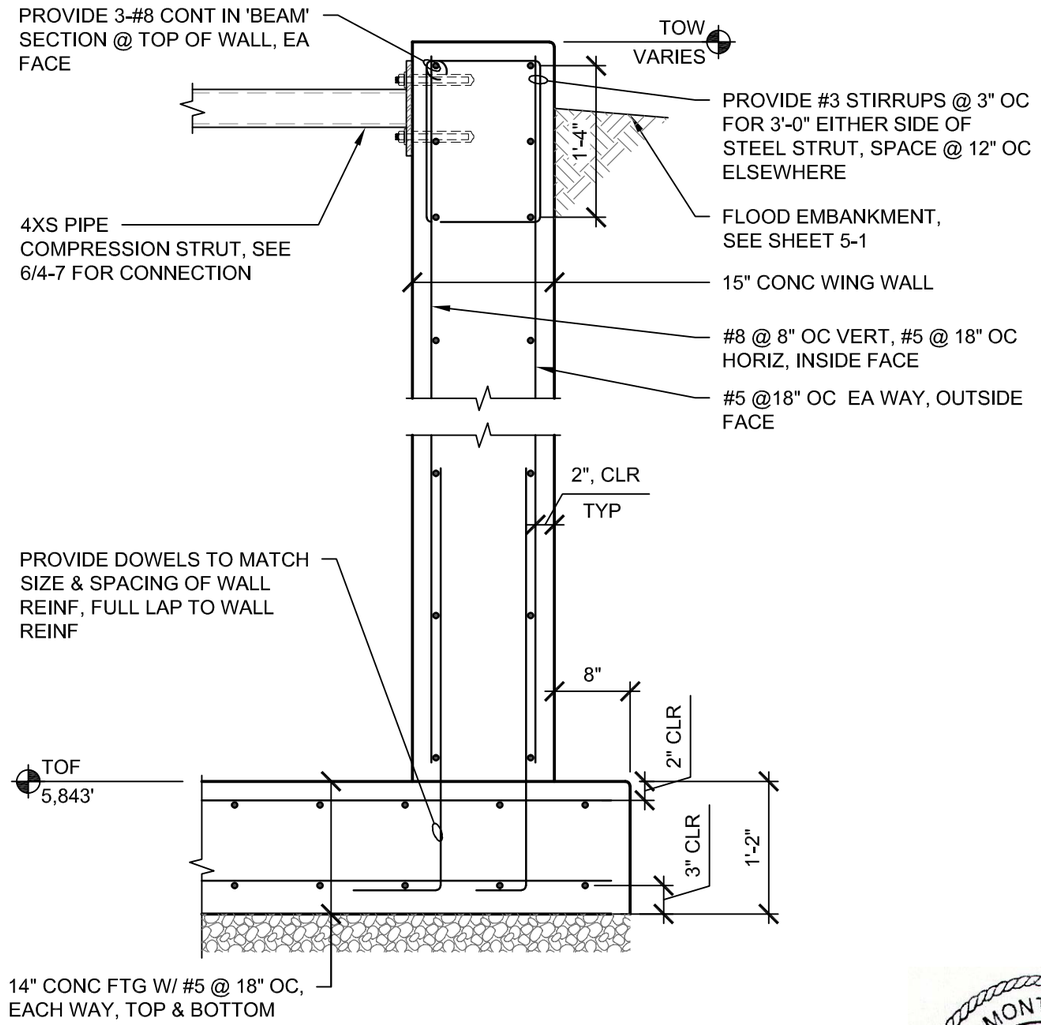

3 (N) CONC WING WALL - TYPE 1

SCALE: NTS

bce STRUCTURAL
BEAUDETTE CONSULTING ENGINEERS, INC.
Missoula Kalispell Bozeman Billings
www.BCEweb.com
(406) 721-7315
BCE PROJECT #16-872

REVISION: DATE: BY: DESC:

DRAWN BY:
DESIGNED BY:
CHECKED BY:
APPROVED BY:
PROJECT NO:
DATE:

DISPLAYED AS:
COORD SYS/ZONE:
DATUM:
UNITS:
SOURCE:

SCALE IN FEET
0

MONTANA FISH, WILDLIFE & PARKS
BANNACK STATE PARK
DETENTION BASIN

BANNACK DETENTION BASIN OUTLET STRUCTURE DETAILS

PIONEER TECHNICAL SERVICES, INC.

MONTANA
TIMOTHY KYLE PATTERSON
15121PE
01/17/2017
LICENSED
PROFESSIONAL ENGINEER

SHEET 4-5

NOTE:
INSTALL PIPE STRUTS BEFORE BACKFILLING WING WALLS

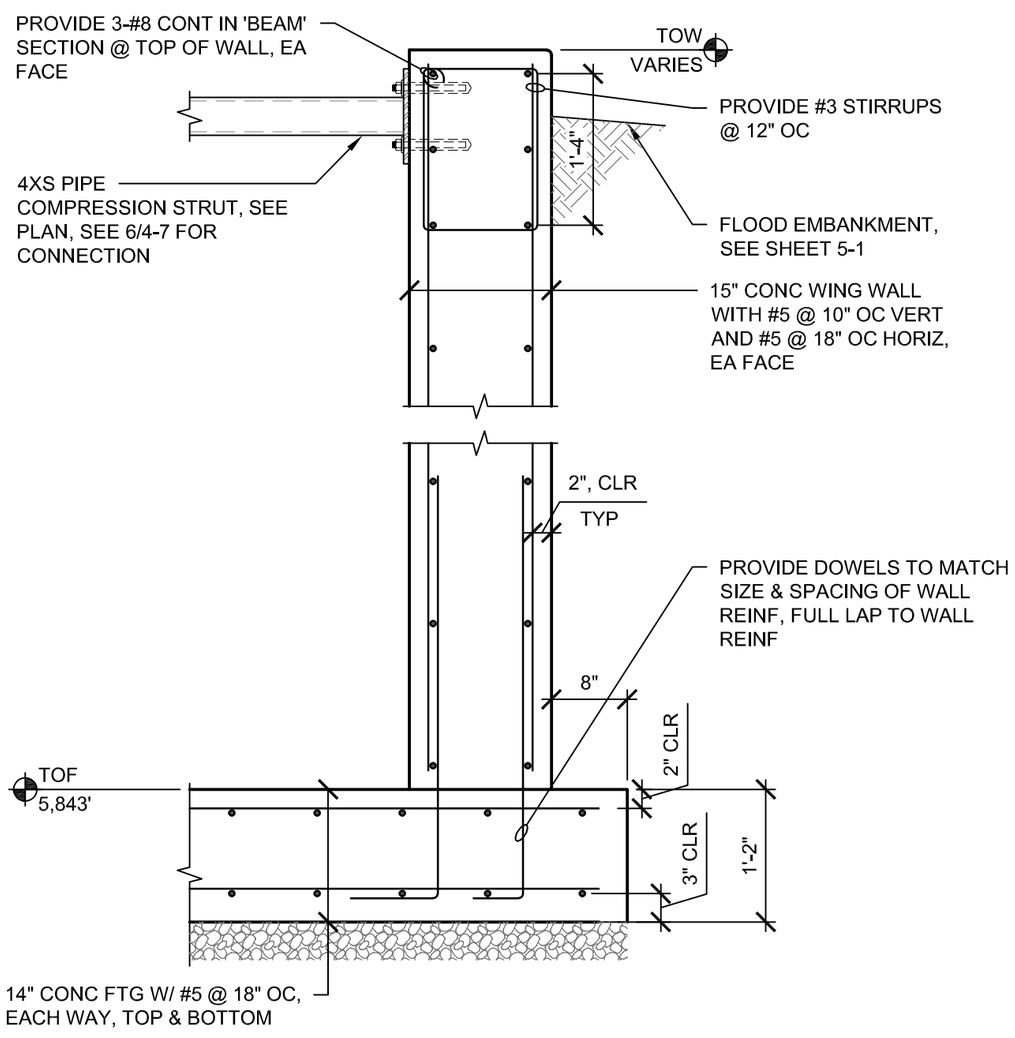

4 (N) CONC WING WALL - TYPE 2

SCALE: NTS

NOTE:
MIN REBAR LAP LENGTH, SEE "TYP REBAR LAP LENGTH SCHEDULE"

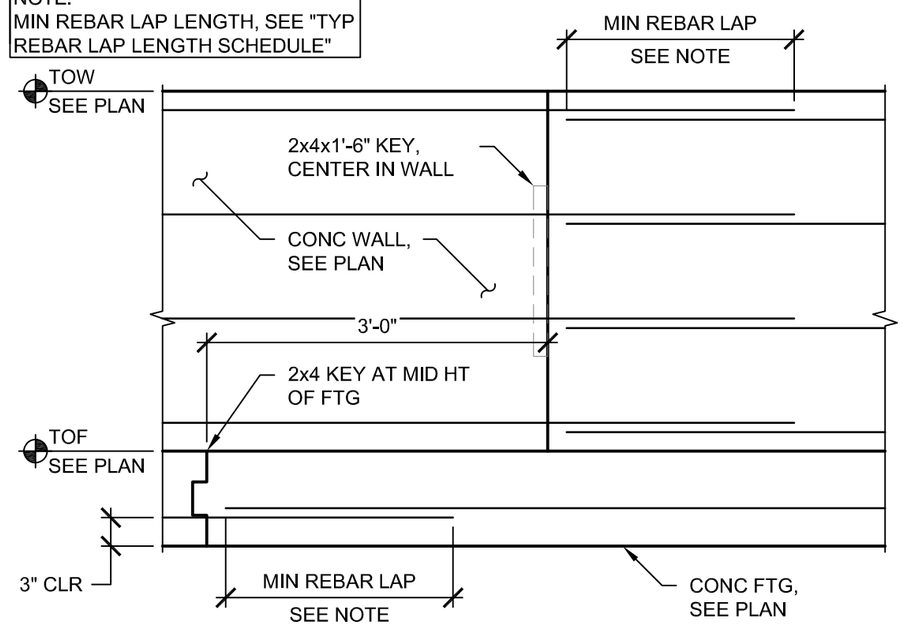

5 TYP WALL & FTG CONSTRUCTION JOINT

SCALE: NTS

NOTE:
1. ESTABLISH CONTROL JOINTS AT 20'-0" OC MAX SPACING
2. JOINT LOCATION TO BE APPROVED BY ENGINEER
3. EXTEND CJ ALONG TOP SURFACE & DOWN BACK SIDE WHERE EXPOSED TO VIEW

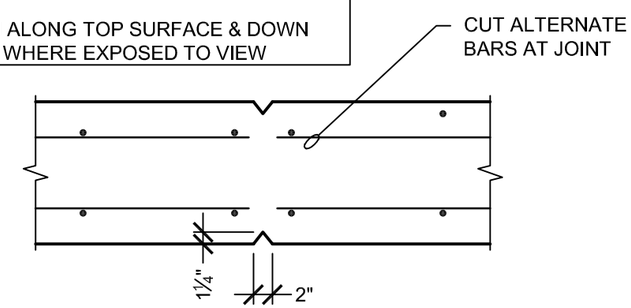

PLAN VIEW

5A TYP VERT CONTROL JT IN CONC WALL

SCALE: NTS

bce STRUCTURAL
BEAUDETTE CONSULTING ENGINEERS, INC.
Missoula Kalispell Bozeman Billings
www.BCEweb.com
(406) 721-7315
BCE PROJECT #16-872

REVISION: DATE: BY: DESC:

DRAWN BY:
DESIGNED BY:
CHECKED BY:
APPROVED BY:
PROJECT NO.:
DATE:

DISPLAYED AS:
COORD SYS/ZONE:
DATUM:
UNITS:
SOURCE:

SCALE IN FEET
0

MONTANA FISH, WILDLIFE & PARKS
BANNACK STATE PARK
DETENTION BASIN

BANNACK DETENTION BASIN OUTLET STRUCTURE DETAILS

PIONEER TECHNICAL SERVICES, INC.

MONTANA
TIMOTHY KYLE PATTERSON
15121PE
01/17/2017
LICENSED
PROFESSIONAL ENGINEER

SHEET 4-6

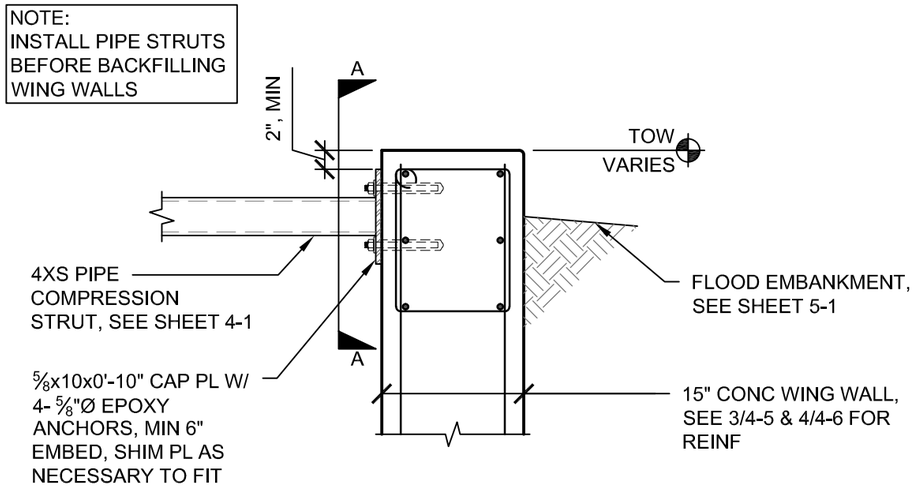

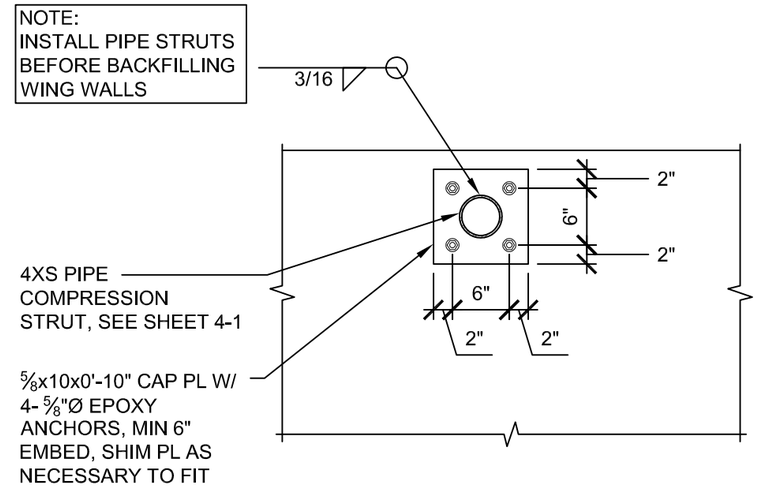

SECTION A-A

6 STEEL STRUT CONNECTION

SCALE: NTS

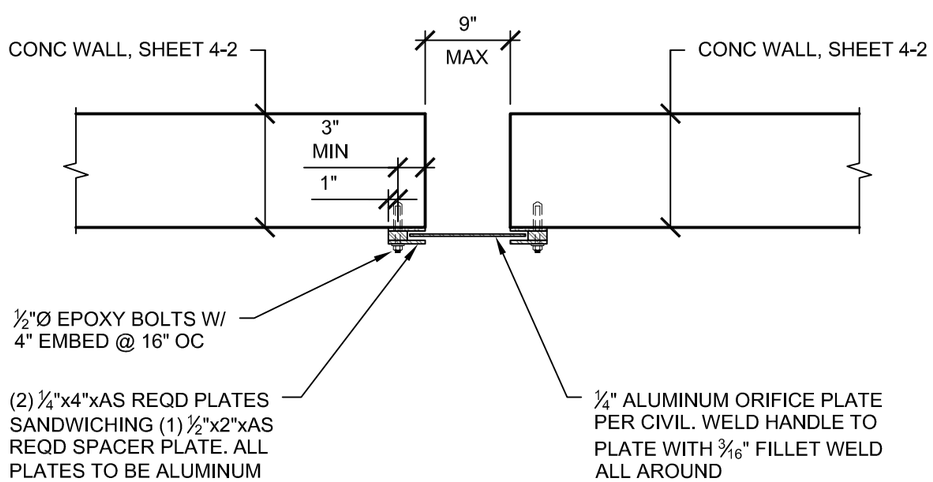

7 ORIFICE PLATE SUPPORT

SCALE: NTS

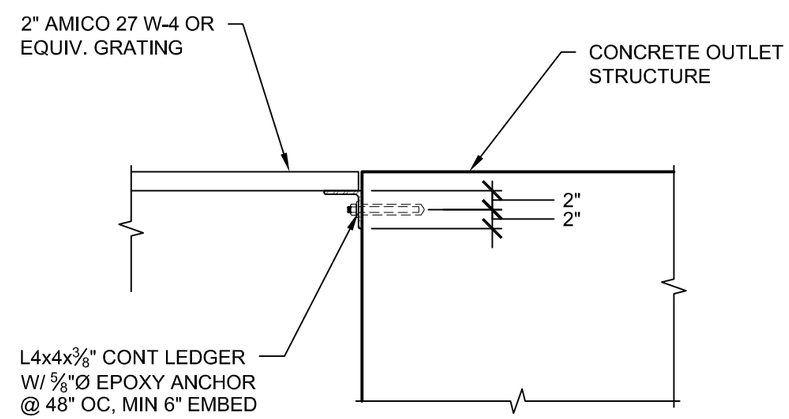

8 GRATING SUPPORT

SCALE: NTS

bce
STRUCTURAL
BEAUDETTE
CONSULTING
ENGINEERS, INC.
Missoula Kalispell
Bozeman Billings
www.BCEweb.com
(406) 721-7315
BCE PROJECT #16-872

REVISION:
DATE: BY: DESC:

DRAWN BY:
DESIGNED BY:
CHECKED BY:
APPROVED BY:
PROJECT NO:
DATE:

DISPLAYED AS:
COORD SYS/ZONE:
DATUM:
UNITS:
SOURCE:

SCALE IN FEET
0

MONTANA FISH, WILDLIFE & PARKS
BANNACK STATE PARK
DETENTION BASIN

BANNACK
DETENTION BASIN
OUTLET STRUCTURE
DETAILS

PIONEER TECHNICAL SERVICES, INC.

SHEET
4-7

NOTE:
1. TYPICAL WALL REINF NOT SHOWN FOR CLARITY
2. FOR OPENINGS LESS THAN 1'-0", SPREAD MAIN REINF BARS AROUND OPENING
3. PLACE ADDL BARS EQUAL TO HALF OF THE INTERRUPTED MAIN REINF BARS EA SIDE OF OPENING
4. INTERRUPTED MAIN REINFORCEMENT TO END AT OPENING

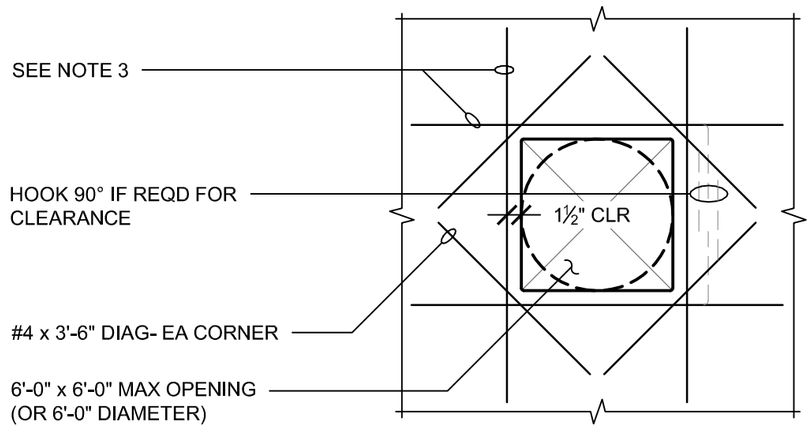

9 TYP REINF AT CONC WALL OPENINGS

SCALE: NTS

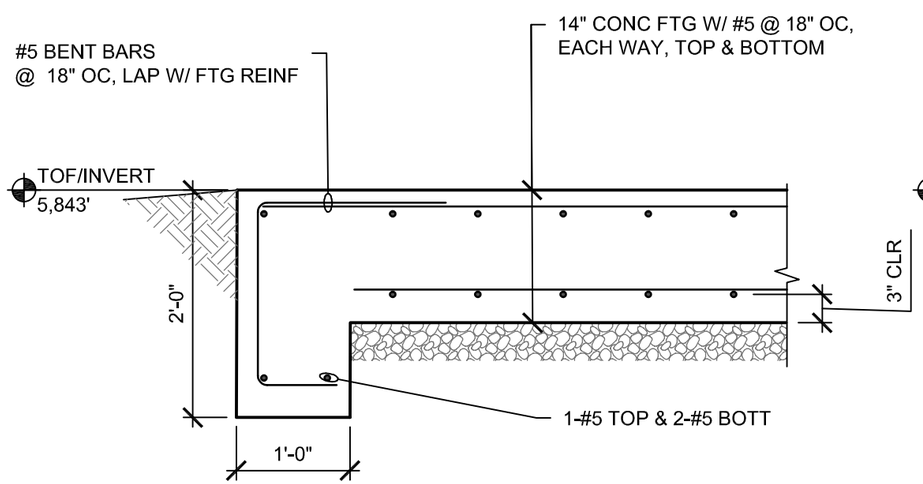

9A FOOTING TURN DOWN @ INLET

SCALE: NTS

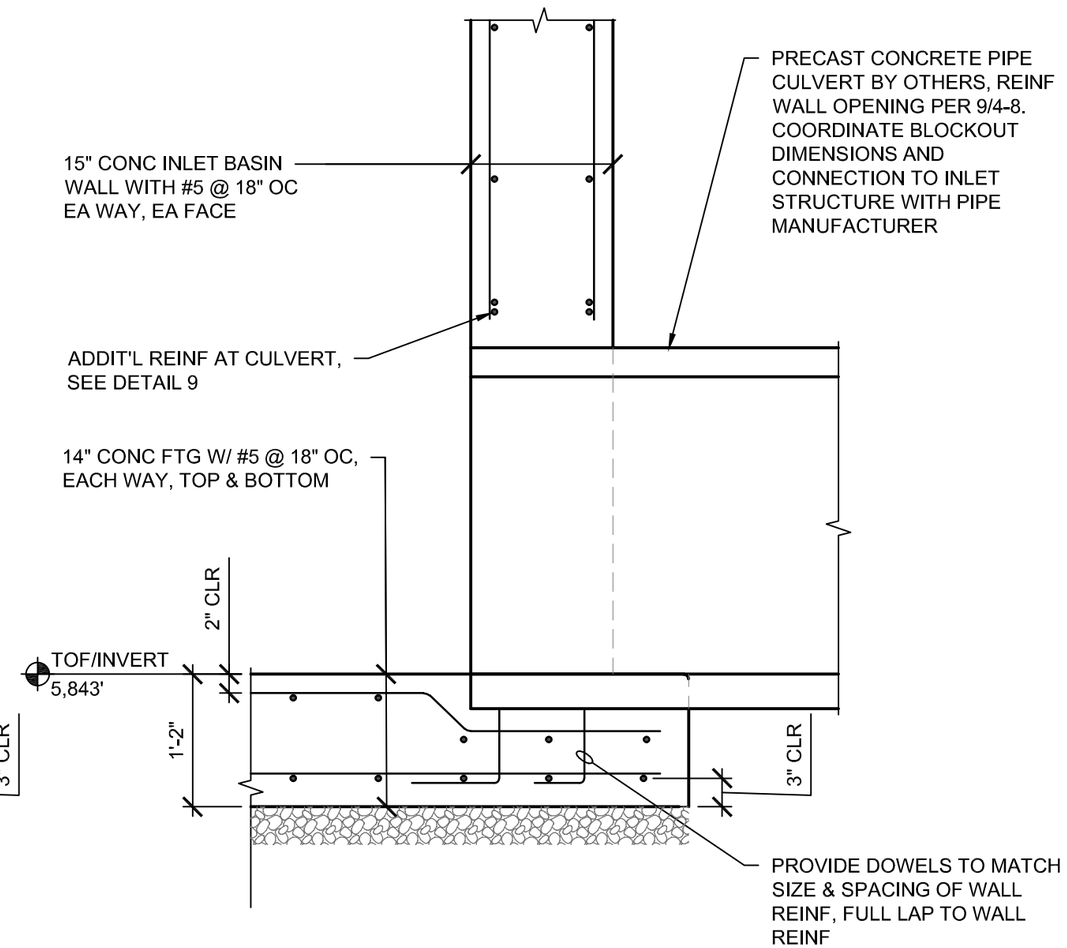

10 INLET STRUCTURE AT CULVERT

SCALE: NTS

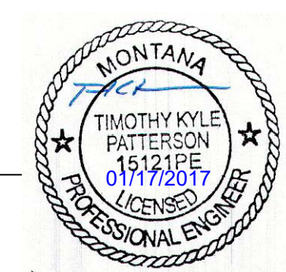

bce STRUCTURAL
BEAUDETTE CONSULTING ENGINEERS, INC.
Missoula Kalispell Bozeman Billings
www.BCEweb.com
(406) 721-7315
BCE PROJECT #16-872

REVISION: DATE: BY: DESC:

DRAWN BY:
DESIGNED BY:
CHECKED BY:
APPROVED BY:
PROJECT NO:
DATE:

DISPLAYED AS:
COORD SYS/ZONE:
DATUM:
UNITS:
SOURCE:

SCALE IN FEET
0

MONTANA FISH, WILDLIFE & PARKS
BANNACK STATE PARK
DETENTION BASIN

BANNACK DETENTION BASIN OUTLET STRUCTURE DETAILS

PIONEER TECHNICAL SERVICES, INC.

SHEET 4-8

APPROVED
FOR CONSTRUCTION

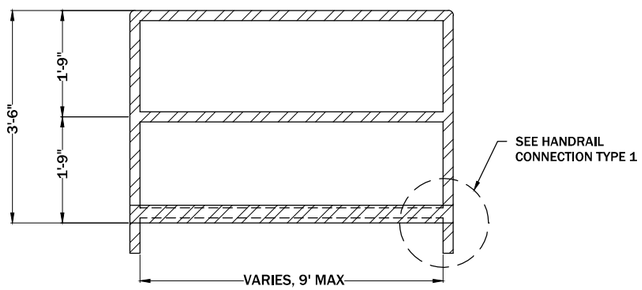

1 / 4-1 OUTLET STRUCTURE HANDRAIL DETAIL
SCALE: NTS

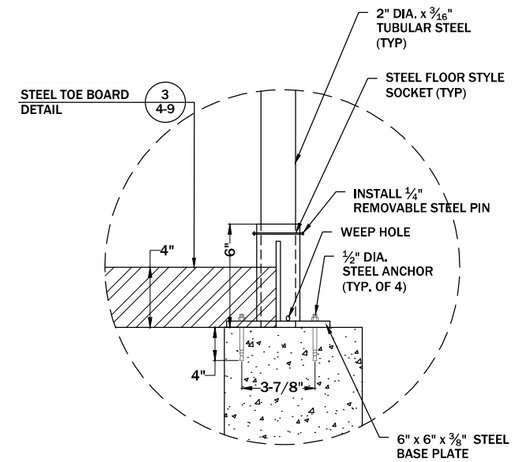

HANDRAIL CONNECTION TYPE 1

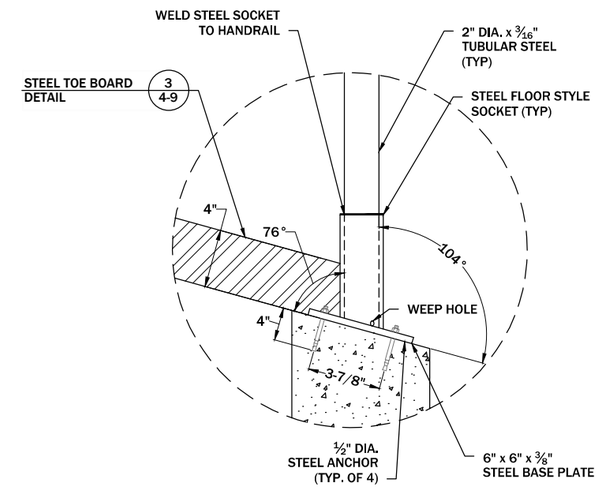

HANDRAIL CONNECTION TYPE 2

2 / 4-1 HANDRAIL CONNECTION DETAIL
SCALE: NTS

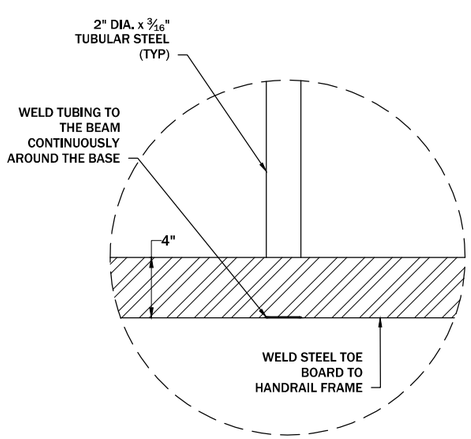

3 / 4-9 STEEL TOE BOARD DETAIL
SCALE: NTS

REVISION:

DATE:	BY:	DESC:

DRAWN BY: JJJ
DESIGNED BY: CEB
CHECKED BY: GEA
APPROVED BY: GEA
PROJECT NO:
DATE: 01/17/17

DISPLAYED AS:
COORD SYS/ZONE: NA
DATUM: NA
UNITS: FEET
SOURCE: PIONEER

SCALE IN FEET
0 NTS

MONTANA FISH, WILDLIFE & PARKS
BANNACK STATE PARK
DETENTION BASIN

BANNACK
DETENTION BASIN
HANDRAIL
DETAILS

PIONEER TECHNICAL SERVICES, INC.
106 PRONGHORN TRAIL, SUITE A
BOZEMAN, MT 59718
(406) 388-8578

SHEET
4-9

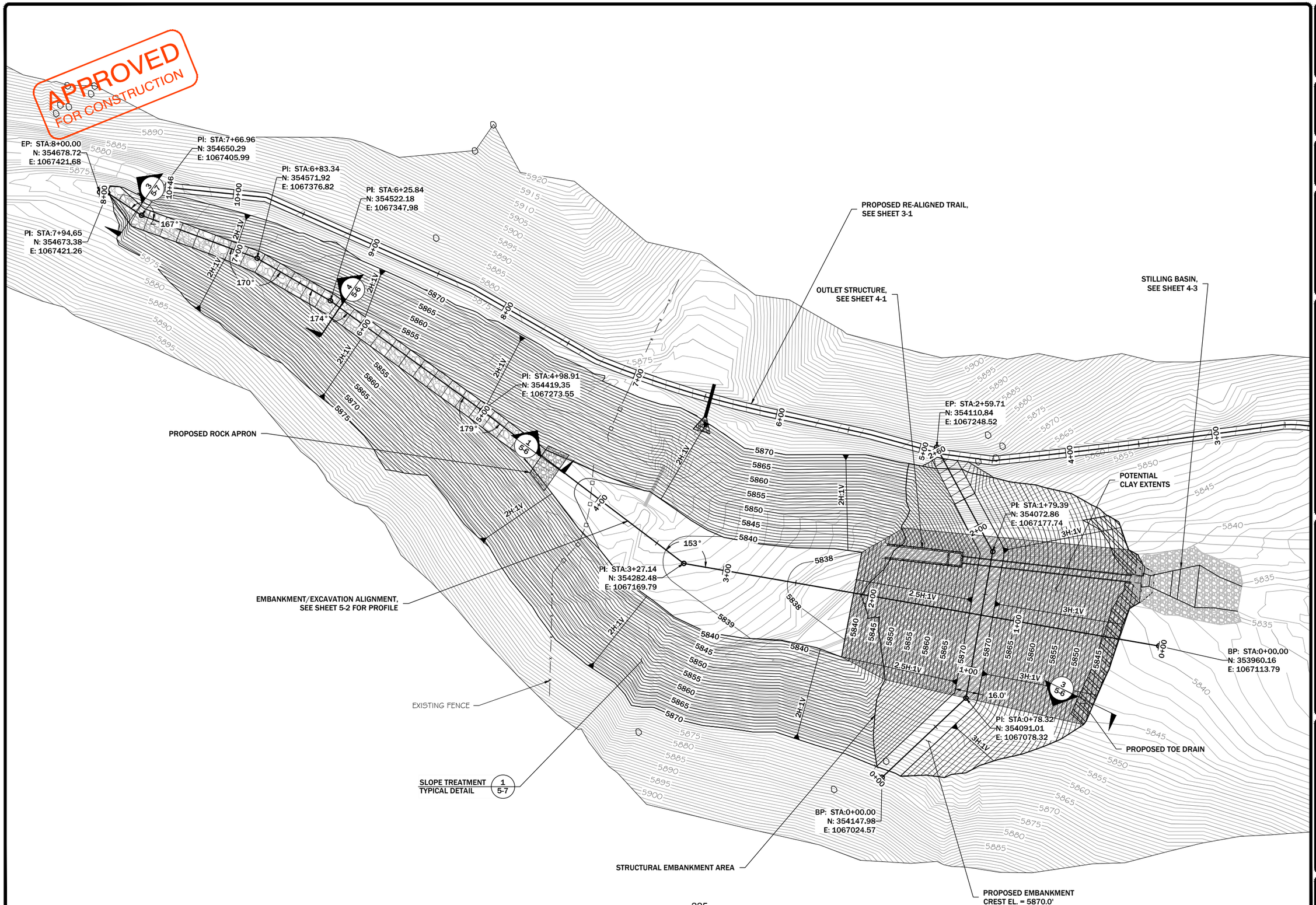

REVISION:

DATE:	BY:	DESC:

DRAWN BY: JJJ
DESIGNED BY: CEB
CHECKED BY: GEA
APPROVED BY: GEA
PROJECT NO:
DATE: 01/17/17

DISPLAYED AS:
COORD SYS/ZONE: MONTANA ST. PLANES
DATUM: NAD83, NAVD88
UNITS: INT. FEET
SOURCE: PIONEER

MONTANA FISH, WILDLIFE & PARKS
BANNACK STATE PARK
DETENTION BASIN

BANNACK
DETENTION BASIN
GRADING PLAN

PIONEER
TECHNICAL SERVICES, INC.
106 PRONGHORN TRAIL, SUITE A
BOZEMAN, MT 59718
(406) 388-8578

SHEET
5-1

1/17/2017 5:02:42 PM G:\MTSP - BANNACK\DETENTION BASIN DETAIL DESIGN\DRAWINGS\CAD\100%(011617) CONST DRAWINGS\BNACK-CO-100-PLP-001-16.DWG

APPROVED
FOR CONSTRUCTION

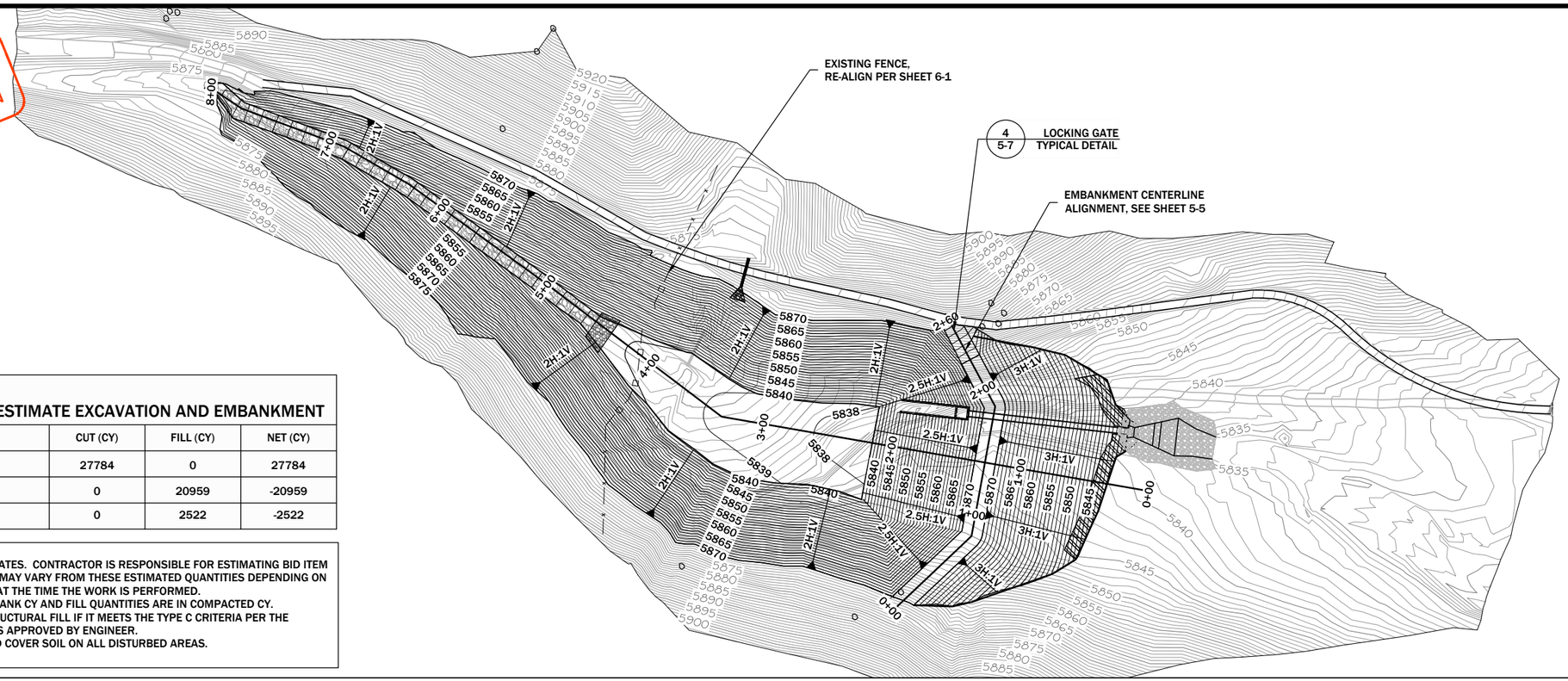

PROPOSED ENGINEER'S ESTIMATE EXCAVATION AND EMBANKMENT

	CUT (CY)	FILL (CY)	NET (CY)
GENERAL EXCAVATION	27784	0	27784
TYPE C FILL	0	20959	-20959
TYPE D COVER SOIL	0	2522	-2522

NOTES:
1. QUANTITIES ARE ENGINEER ESTIMATES. CONTRACTOR IS RESPONSIBLE FOR ESTIMATING BID ITEM QUANTITIES. ACTUAL QUANTITIES MAY VARY FROM THESE ESTIMATED QUANTITIES DEPENDING ON SITE CONDITIONS ENCOUNTERED AT THE TIME THE WORK IS PERFORMED.
2. EXCAVATION QUANTITIES ARE IN BANK CY AND FILL QUANTITIES ARE IN COMPACTED CY.
3. GENERAL FILL TO BE USED AS STRUCTURAL FILL IF IT MEETS THE TYPE C CRITERIA PER THE TECHNICAL SPECIFICATIONS OR AS APPROVED BY ENGINEER.
4. SALVAGE TOP 6 INCHES OF TYPE D COVER SOIL ON ALL DISTURBED AREAS.

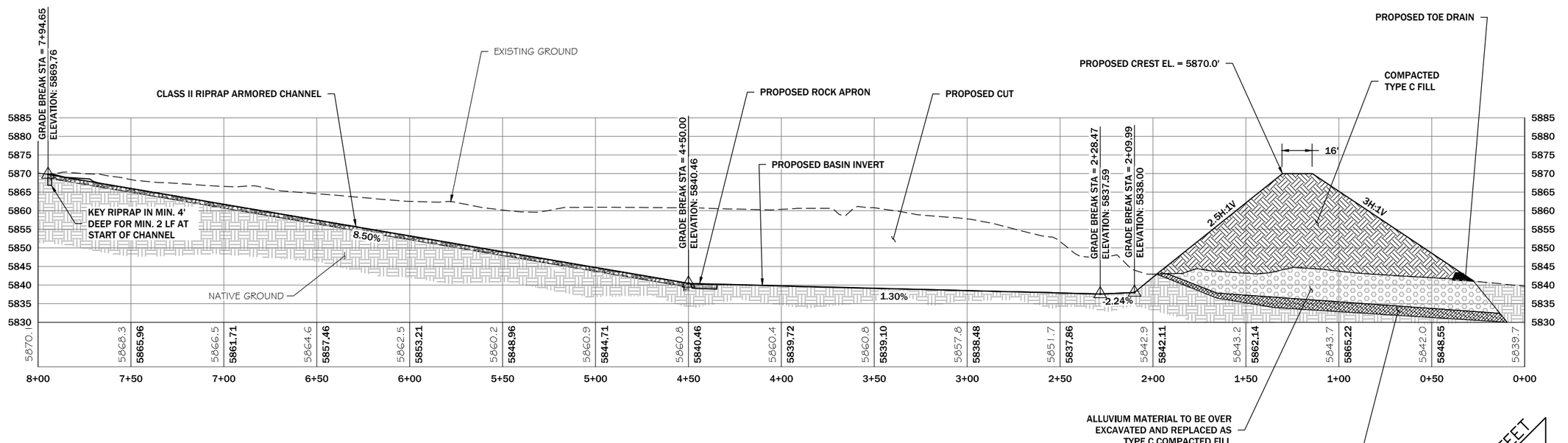

PROPOSED DETENTION BASIN PROFILE

SCALE: 1" = 60'

REVISION:

DATE:	BY:	DESC:

DRAWN BY: JJJ
DESIGNED BY: CEB
CHECKED BY: GEA
APPROVED BY: GEA
PROJECT NO:
DATE: 01/17/17

DISPLAYED AS:
COORD SYS/ZONE: MONTANA ST. PLANES
DATUM: NAD83, NAVD88
UNITS: INT. FEET
SOURCE: PIONEER

SCALE IN FEET
0 50 100

MONTANA FISH, WILDLIFE & PARKS
BANNACK STATE PARK
DETENTION BASIN

BANNACK
DETENTION BASIN
PLAN AND PROFILE

PIONEER TECHNICAL SERVICES, INC.
106 PRONGHORN TRAIL, SUITE A
BOZEMAN, MT 59718
(406) 388-8578

SHEET
5-2

APPROVED
FOR CONSTRUCTION

EMBANKMENT AT EXISTING SLOPE TYPICAL SECTION 3/5-6

EXISTING GROUND, TYP.

STA 1+50

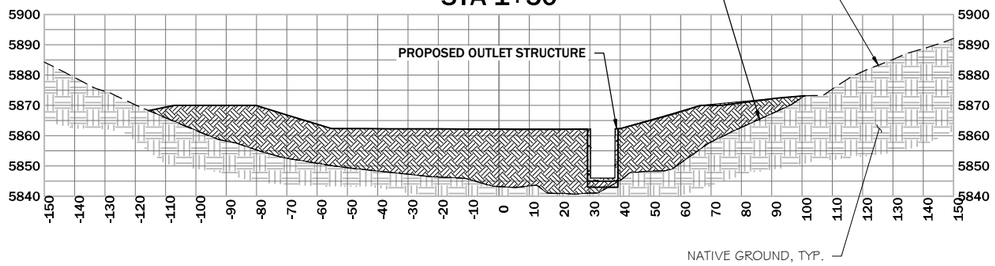

STA 1+00

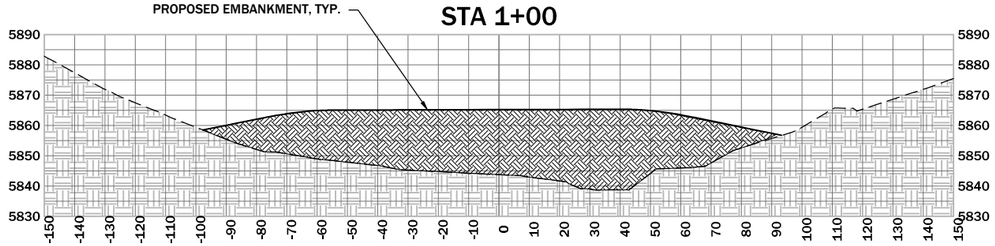

STA 0+50

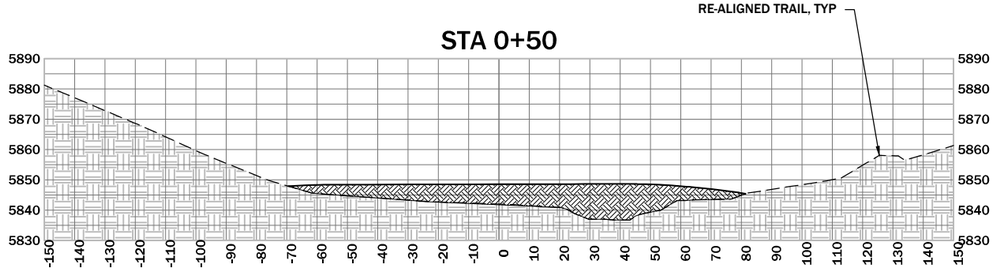

STA 0+00

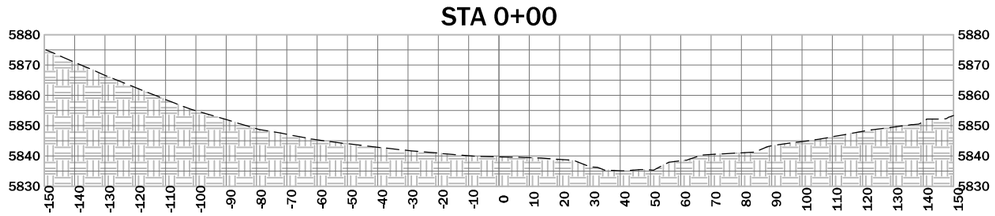

STA 3+50

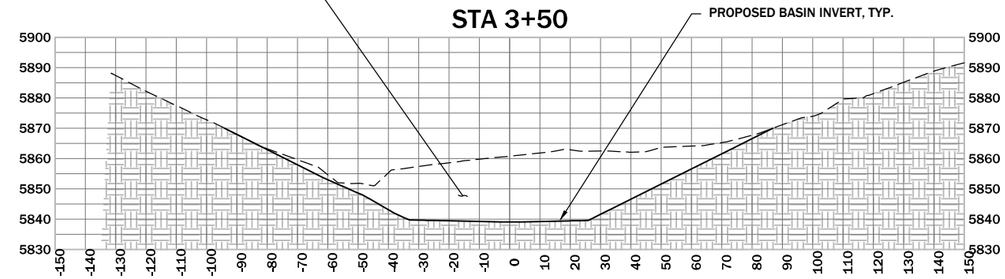

STA 3+00

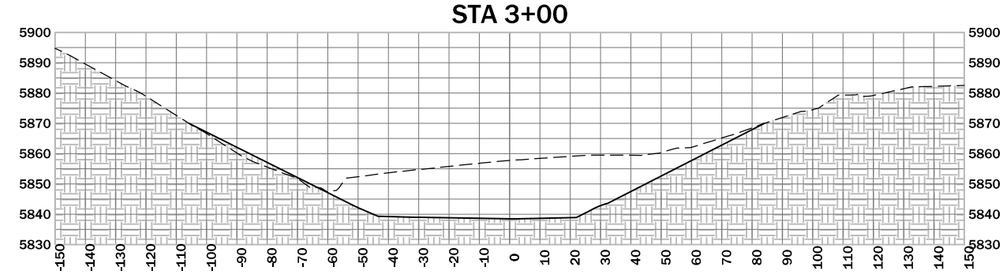

STA 2+50

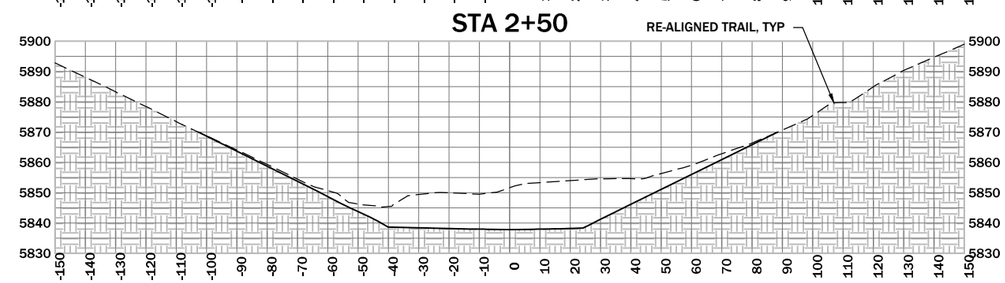

STA 2+00

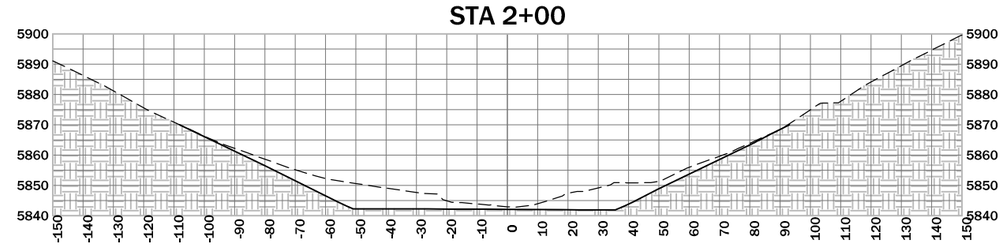

SCALE IN FEET 0 25 50

SCALE IN FEET 50 50

REVISION: DATE:	BY:	DESC:

DRAWN BY: JJJ
DESIGNED BY: CEB
CHECKED BY: GEA
APPROVED BY: GEA
PROJECT NO:
DATE: 01/17/17

DISPLAYED AS:
COORD SYS/ZONE: NA
DATUM: NA
UNITS: FEET
SOURCE: PIONEER

MONTANA FISH, WILDLIFE & PARKS
BANNACK STATE PARK
DETENTION BASIN

BANNACK
EMBANKMENT/
EXCAVATION
CROSS SECTIONS (1 OF 2)

PIONEER TECHNICAL SERVICES, INC.
106 PRONGHORN TRAIL, SUITE A
BOZEMAN, MT 59718
(406) 388-8578

SHEET 5-3

APPROVED
FOR CONSTRUCTION

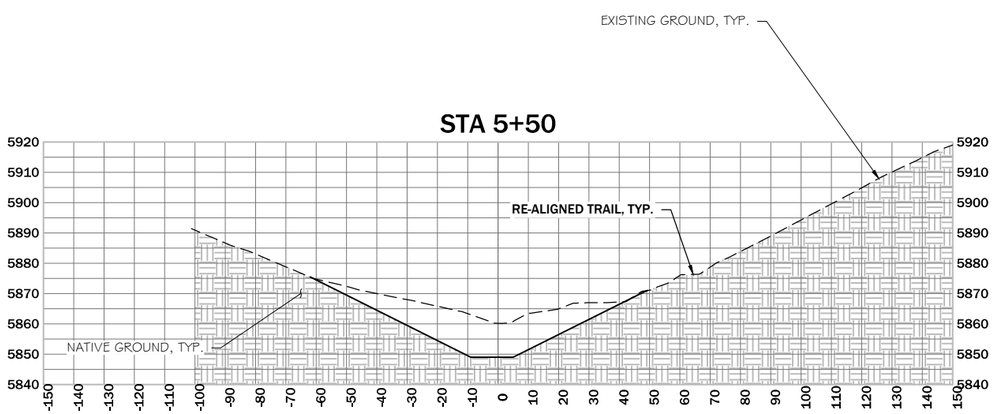

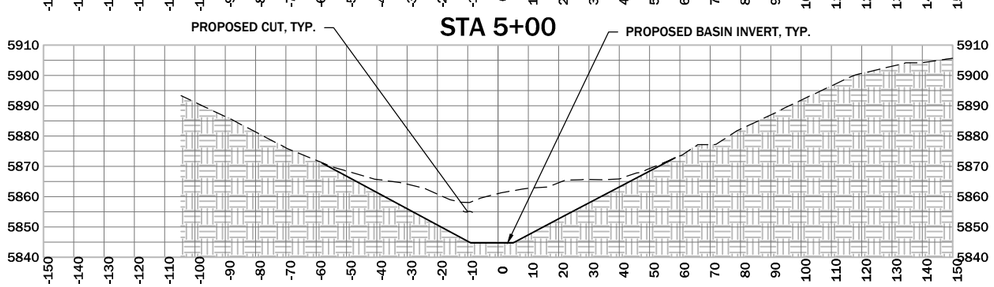

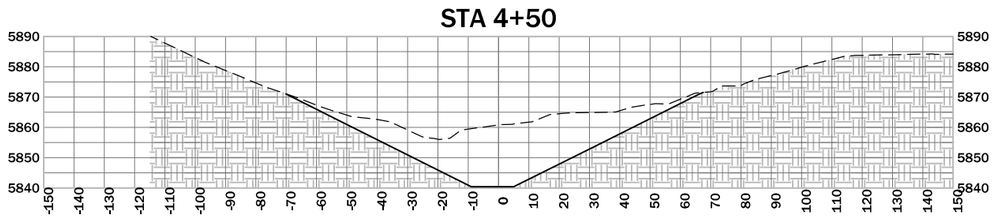

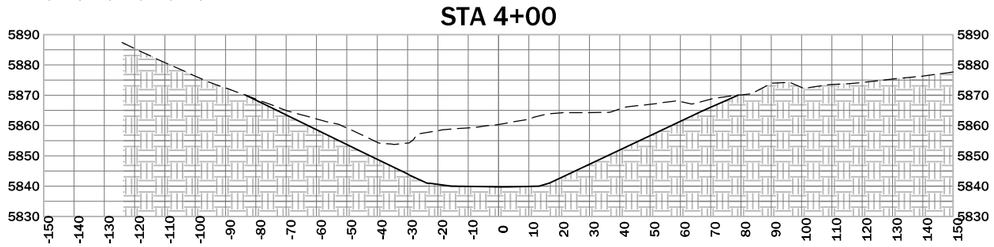

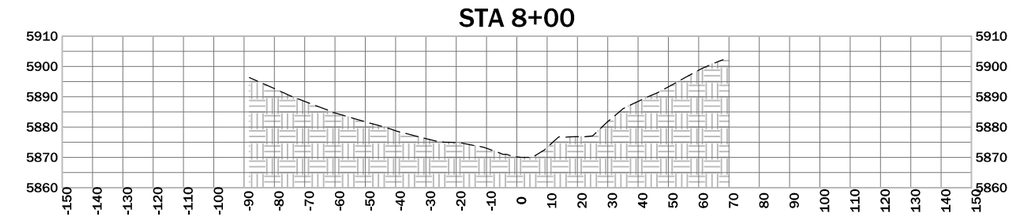

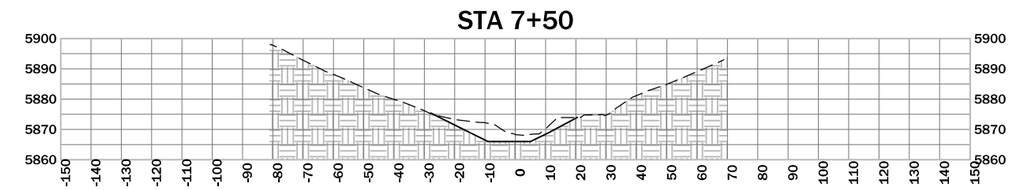

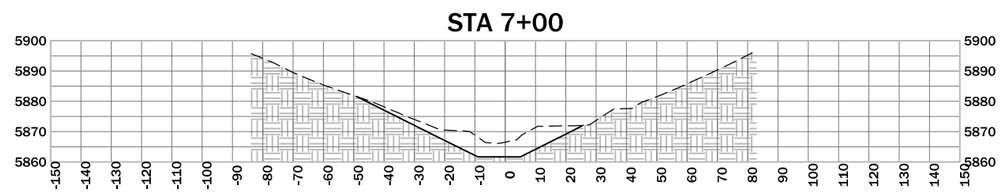

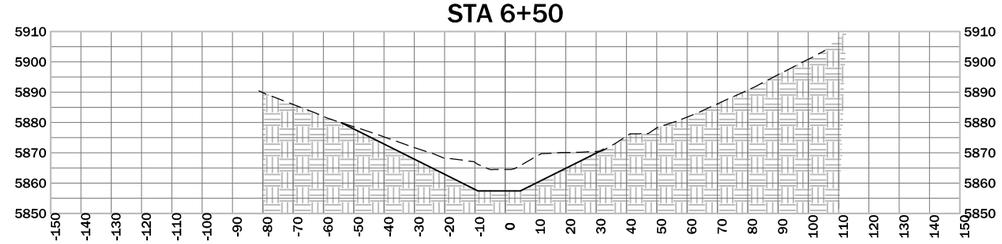

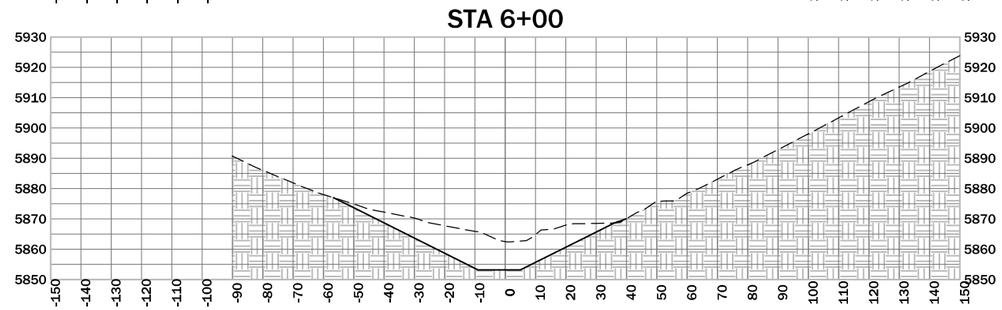

SCALE IN FEET
0 25 50

REVISION:		
DATE:	BY:	DESC:

DRAWN BY: JJJ
DESIGNED BY: CEB
CHECKED BY: GEA
APPROVED BY: GEA
PROJECT NO:
DATE: 01/17/17

DISPLAYED AS:
COORD SYS/ZONE: NA
DATUM: NA
UNITS: FEET
SOURCE: PIONEER

SCALE IN FEET
0 25 50

MONTANA FISH, WILDLIFE & PARKS
BANNACK STATE PARK
DETENTION BASIN

BANNACK
EMBANKMENT/
EXCAVATION
CROSS SECTIONS (2 OF 2)

PIONEER
TECHNICAL SERVICES, INC.
106 PRONGHORN TRAIL, SUITE A
BOZEMAN, MT 59718
(406) 388-8578

SHEET
5-4

APPROVED
FOR CONSTRUCTION

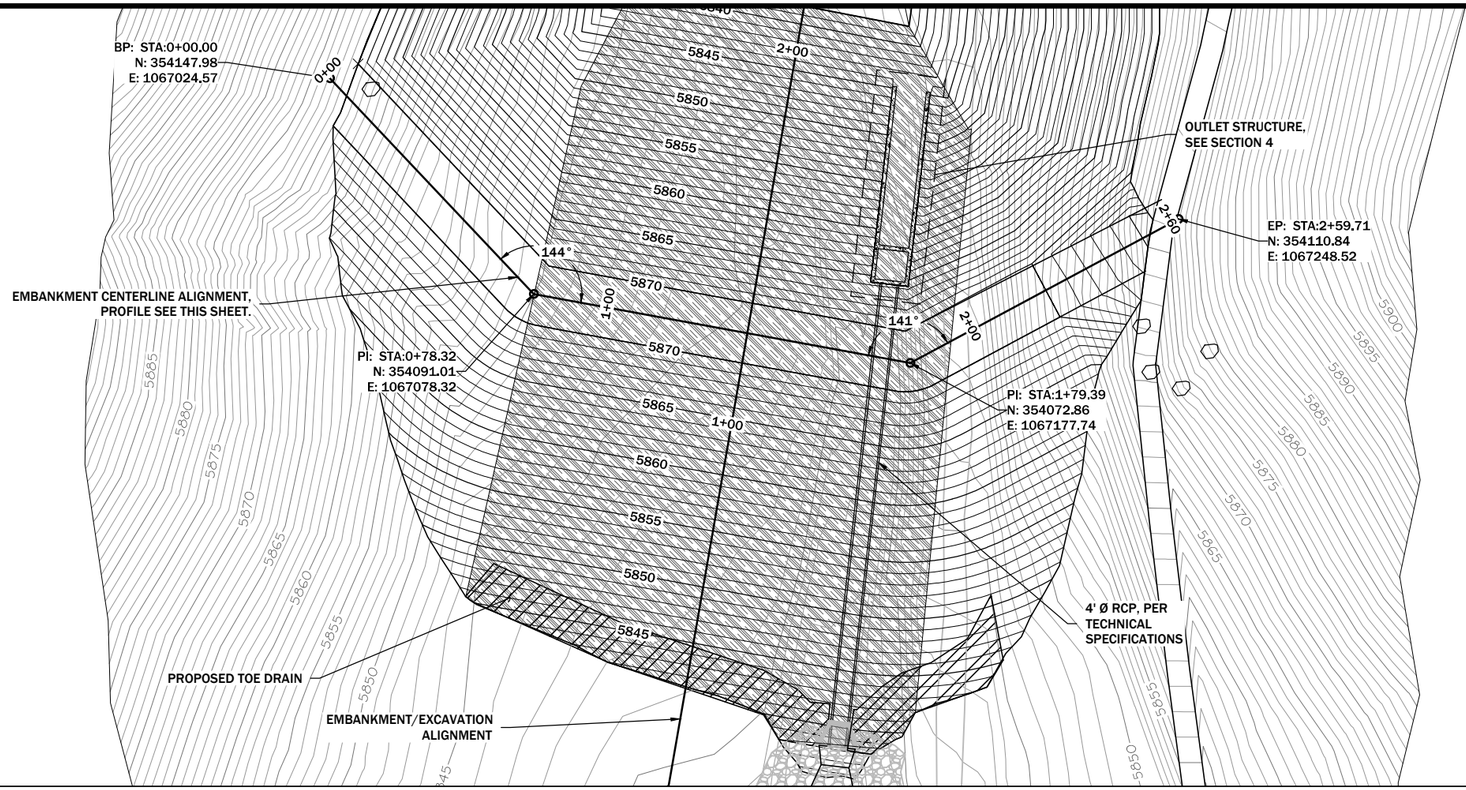

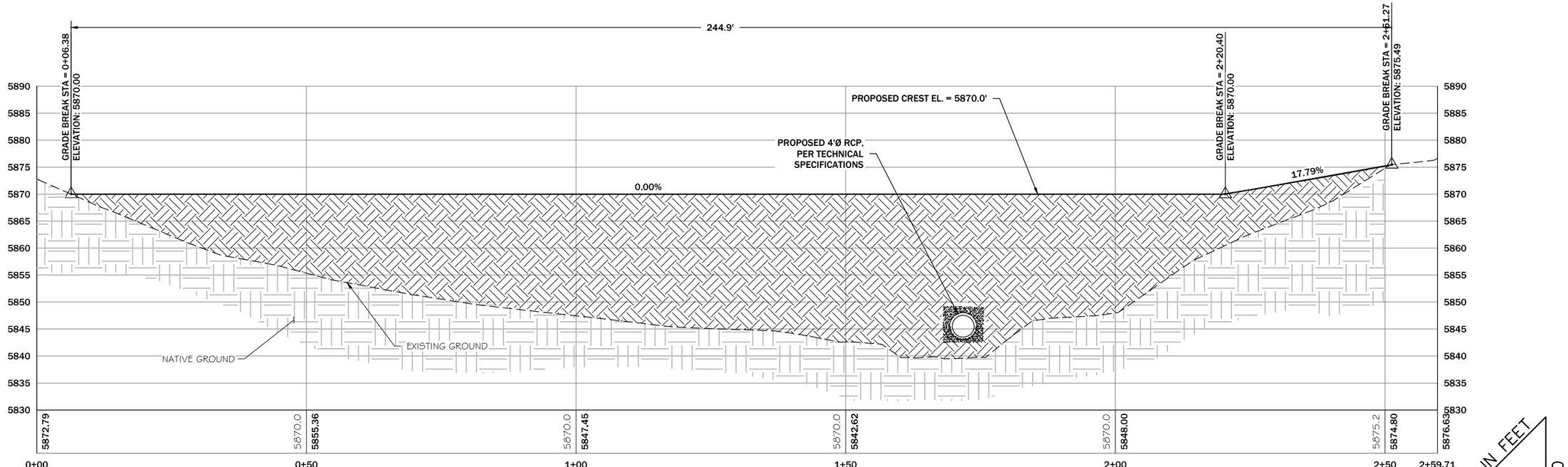

PROPOSED EMBANKMENT PROFILE

SCALE: 1" = 20'

SCALE IN FEET 20 20

REVISION:

DATE:	BY:	DESC:

DRAWN BY: JJJ
DESIGNED BY: CEB
CHECKED BY: GEA
APPROVED BY: GEA
PROJECT NO:
DATE: 01/17/17

DISPLAYED AS:
COORD SYS/ZONE: MONTANA ST. PLANES
DATUM: NAD83, NAVD88
UNITS: INT. FEET
SOURCE: PIONEER

N

SCALE IN FEET
0 20 40

MONTANA FISH, WILDLIFE & PARKS
BANNACK STATE PARK
DETENTION BASIN

BANNACK
EMBANKMENT
PLAN AND PROFILE

PIONEER TECHNICAL SERVICES, INC.
106 PRONGHORN TRAIL, SUITE A
BOZEMAN, MT 59718
(406) 388-8578

SHEET
5-5

1/17/2017 5:04:52 PM G:\MTSP - BANNACK\DETENTION BASIN DETAIL DESIGN\DRAWINGS\CAD\100%(011617) CONST DRAWINGS\BNACK-CO-100-PLP-001-16.DWG

APPROVED
FOR CONSTRUCTION

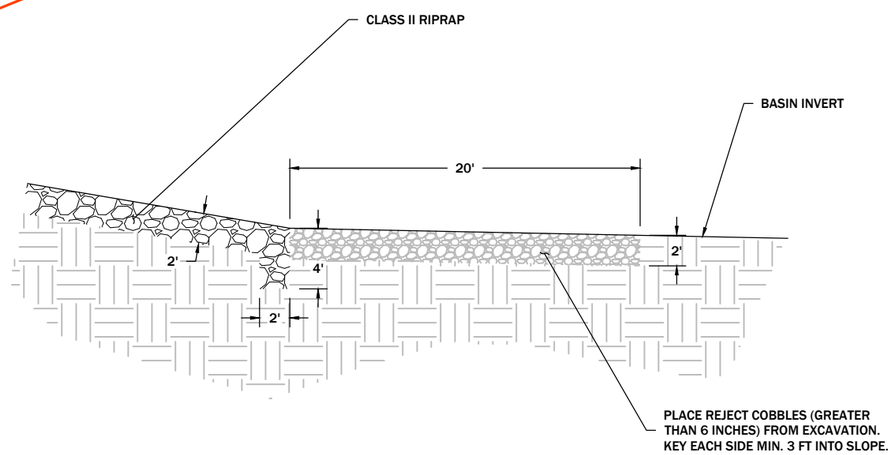

1 / 5-1 ROCK APRON SECTION
SCALE: 1"=10'

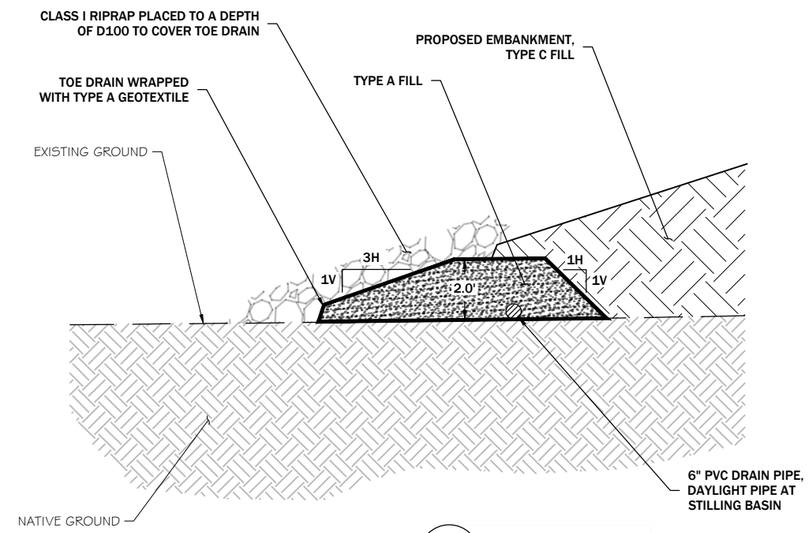

3 / 5-1 TOE DRAIN SECTION
SCALE: 1" = 5'

PROPOSED ENGINEER'S ESTIMATE TOE DRAIN		
	VOLUME (CY)	AREA (SY)
TYPE A FILL	71	NA
TYPE A GEOTEXTILE	NA	371
CLASS I RIPRAP	59	NA

NOTES:
1. INVERT ELEVATIONS ARE APPROXIMATE. TOE DRAIN SHALL BE INSTALLED AT A MINIMUM 0.025% SLOPE

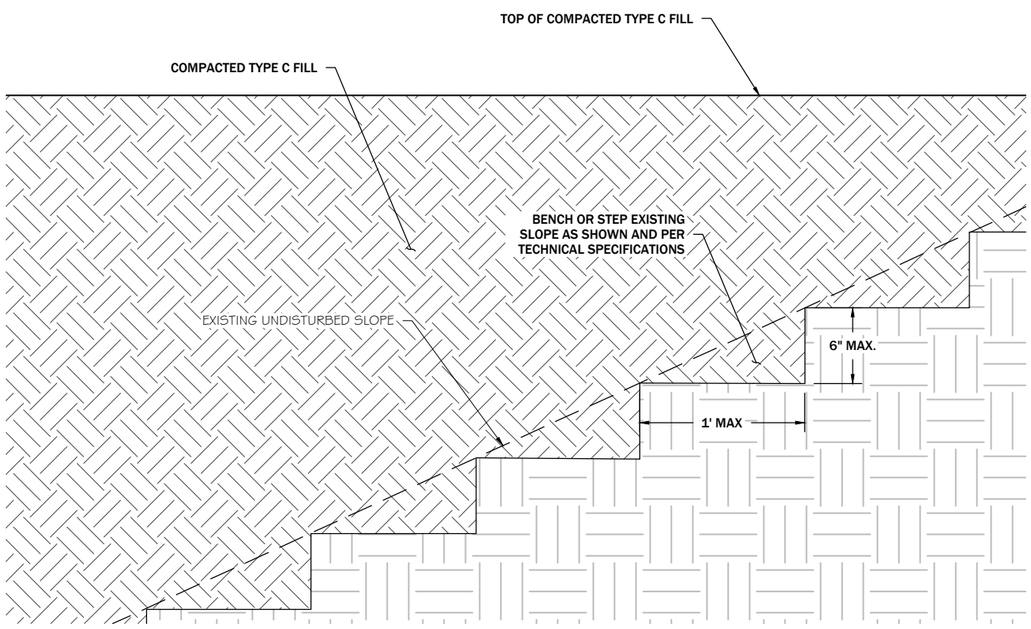

3 / 5-3 EMBANKMENT AT EXISTING SLOPE
TYPICAL SECTION
SCALE: 1"=1'

PROPOSED ENGINEER'S ESTIMATE CHANNEL		
	VOLUME (CY)	AREA (SY)
CLASS II RIPRAP	762	NA

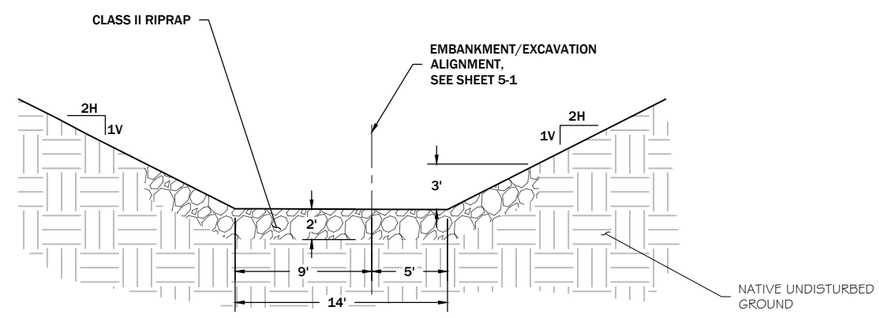

4 / 5-1 ARMORED CHANNEL
TYPICAL SECTION
SCALE: 1" = 10'

REVISION:

DATE:	BY:	DESC:

DRAWN BY: JJJ
DESIGNED BY: JJJ
CHECKED BY: CEB
APPROVED BY: GEA
PROJECT NO:
DATE: 01/17/17

DISPLAYED AS:
COORD SYS/ZONE: NA
DATUM: NA
UNITS: FEET
SOURCE: PIONEER

SCALE IN FEET
0 NA

MONTANA FISH, WILDLIFE & PARKS
BANNACK STATE PARK
DETENTION BASIN

BANNACK
DETENTION BASIN
DETAILS

PIONEER TECHNICAL SERVICES, INC.
106 PRONGHORN TRAIL, SUITE A
BOZEMAN, MT 59718
(406)388-8578

SHEET
5-6

APPROVED
FOR CONSTRUCTION

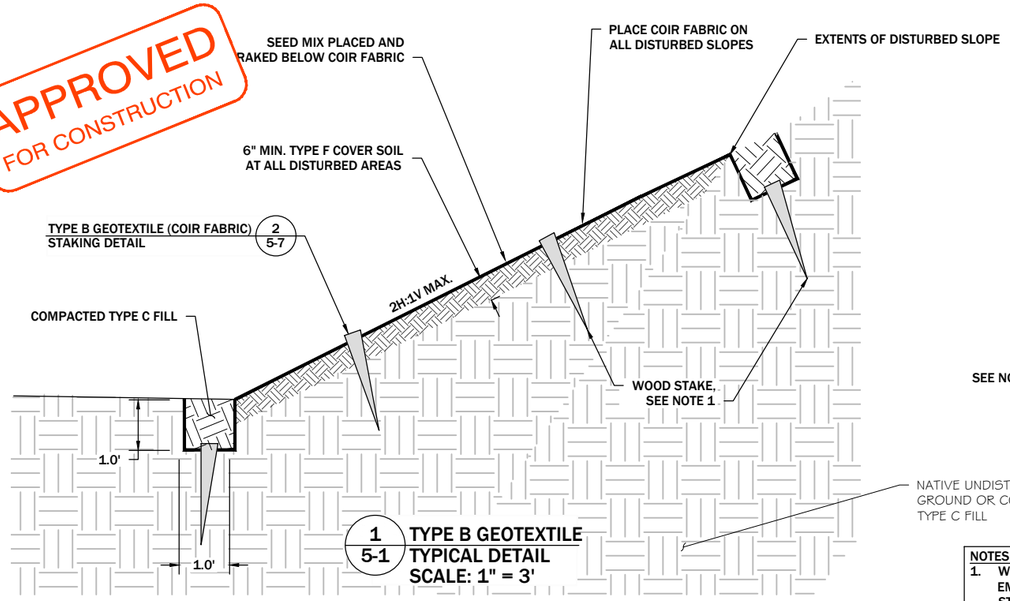

1 5-1 TYPE B GEOTEXTILE TYPICAL DETAIL
SCALE: 1" = 3'

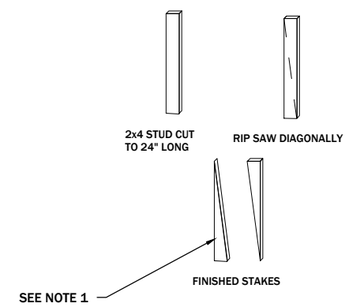

NOTES:
1. WOOD STAKES MAY NOT BE USED ON COMPACTED EMBANKMENT. USE MANUFACTURER PROVIDED STAPLE OR ENGINEER APPROVED EQUAL ON COMPACTED EMBANKMENT.

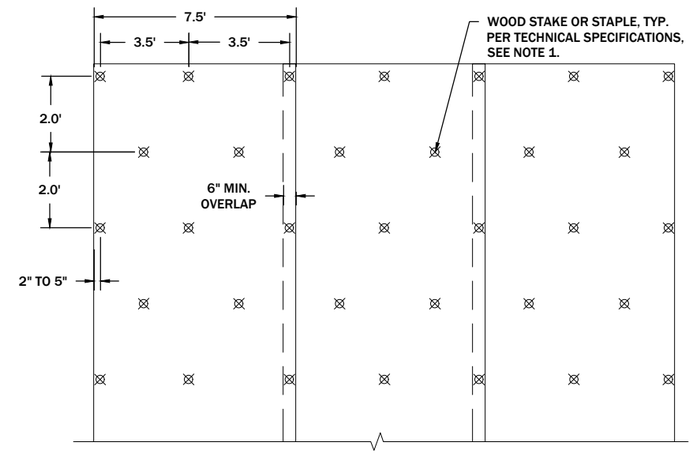

2 5-7 TYPE B GEOTEXTILE STAKING DETAIL
SCALE: 1" = 6'

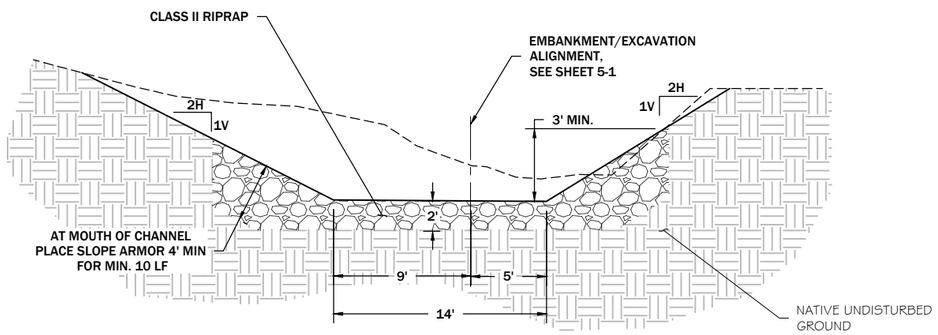

3 5-1 ARMORED CHANNEL INLET SECTION
SCALE: 1" = 10'

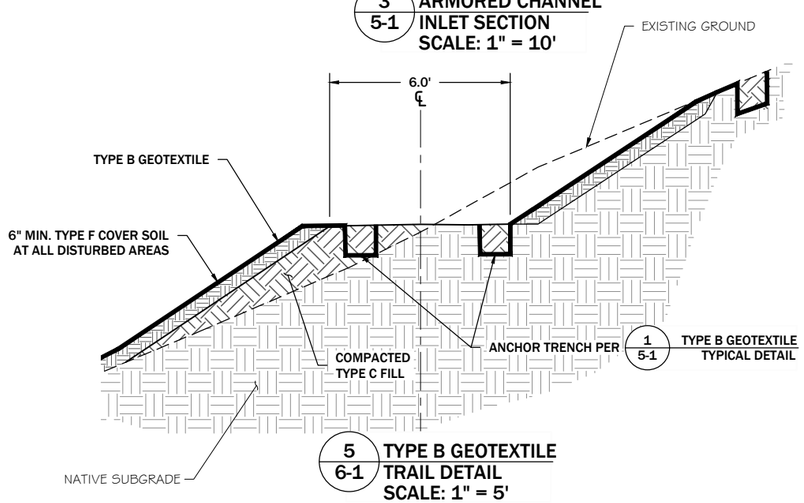

5 6-1 TYPE B GEOTEXTILE TRAIL DETAIL
SCALE: 1" = 5'

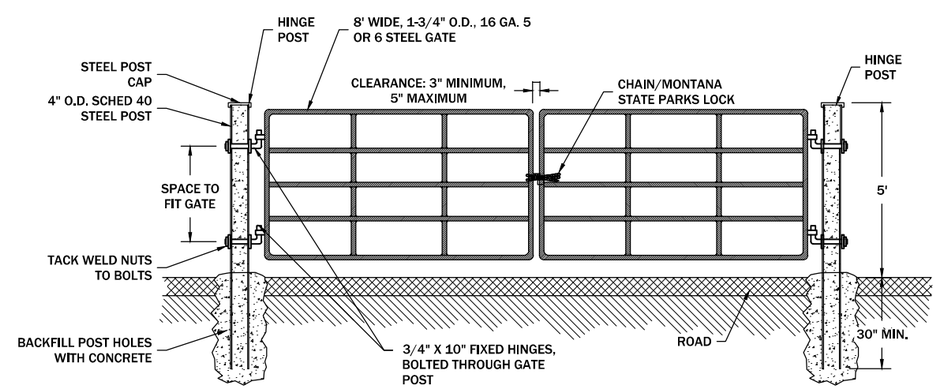

ELEVATION VIEW

NOTES:
1. ENSURE HINGE POST & LOCK POST ARE STRAIGHT AND VERTICAL.
2. GATE COLOR SHALL BE BROWN.
3. INSTALL END CAPS ON HINGES.
4. PAINT POSTS TO MATCH GATE.

4 5-2 LOCKING GATE TYPICAL DETAIL
SCALE: NTS

REVISION:

DATE:	BY:	DESC:

DRAWN BY: JBU
DESIGNED BY: CEB
CHECKED BY: GEA
APPROVED BY: GEA
PROJECT NO:
DATE: 01/20/17

DISPLAYED AS:
COORD SYS/ZONE: NA
DATUM: NA
UNITS: FEET
SOURCE: PIONEER

SCALE IN FEET
0 NA

MONTANA FISH, WILDLIFE & PARKS
BANNACK STATE PARK
DETENTION BASIN

BANNACK
DETENTION BASIN
DETAILS

PIONEER TECHNICAL SERVICES, INC.
106 PRONGHORN TRAIL, SUITE A
BOZEMAN, MT 59718
(406) 388-8578

SHEET
5-7

APPROVED
FOR CONSTRUCTION

PROPOSED ENGINEER'S ESTIMATE SITE MATERIALS	
	VOLUME
GENERAL EXCAVATION [2]	27920
TYPE A FILL [3]	202
TYPE B FILL [3]	56
TYPE C FILL [3]	21450
TYPE D FILL [3]	2522
TYPE E FILL [4]	372
TYPE F FILL	2634
CLASS I RIPRAP	88
CLASS II RIPRAP	1118
CONCRETE	134
WIRE FENCE [5]	910
JACK LEG FENCE [5]	77

NOTES:
1. QUANTITIES ARE ENGINEER ESTIMATES. CONTRACTOR IS RESPONSIBLE FOR ESTIMATING BID ITEM QUANTITIES. ACTUAL QUANTITIES MAY VARY FROM THESE ESTIMATED QUANTITIES DEPENDING ON SITE CONDITIONS ENCOUNTERED AT THE TIME THE WORK IS PERFORMED.
2. EXCAVATION QUANTITIES ARE IN BANK CUBIC YARDS
3. FILL QUANTITIES ARE IN COMPACTED CUBIC YARDS
4. TYPE E FILL QUANTITIES ARE IN WET TONS.
5. FENCE QUANTITIES ARE IN LINEAR FEET.
6. ALL ENGINEER'S ESTIMATES INCLUDE A 10% CONTINGENCY.

LEGEND:

PLACE 6 INCHES OF TYPE F COVER SOIL, SEED AND THEN PLACE TYPE B GEOTEXTILE PER (1 / 5-7) TYPE B GEOTEXTILE TYPICAL DETAIL (APPROX. 2.3 ACRES)

PLACE 6 INCHES OF TYPE F COVER SOIL AND SEED. (APPROX. 0.8 ACRES)

REVISION:

DATE:	BY:	DESC:

DRAWN BY: JJJ
DESIGNED BY: JJJ
CHECKED BY: CEB
APPROVED BY: GEA
PROJECT NO:
DATE: 01/16/17

DISPLAYED AS:
COORD SYS/ZONE: MONTANA ST. PLANES
DATUM: NAD83, NAVD88
UNITS: INT. FEET
SOURCE: PIONEER

SCALE IN FEET
0 40 80

MONTANA FISH, WILDLIFE & PARKS
BANNACK STATE PARK
DETENTION BASIN

BANNACK
DETENTION BASIN
FINAL GRADING &
REVEGETATION PLAN

PIONEER TECHNICAL SERVICES, INC.
106 PRONGHORN TRAIL, SUITE A
BOZEMAN, MT 59718
(406) 388-8578

SHEET
6-1