IMPROVEMENTS 2016

VARNEY BRIDGE FISHING ACCESS SITE

near ENNIS, MT

FWP # 7153716

PROJECT LOCATION

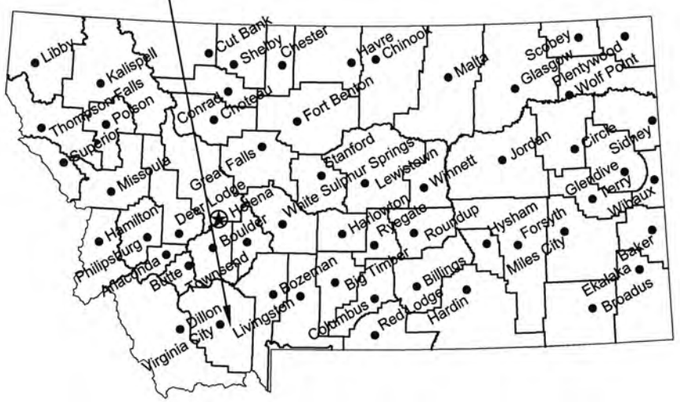

Location Map

No Scale

North

PROJECT LOCATION

Vicinity Map

No Scale

MONTANA FISH, WILDLIFE AND PARKS
DESIGN AND CONSTRUCTION BUREAU

MAILING ADDRESS:
PO BOX 200701
HELENA, MT 59620-0701

PHYSICAL ADDRESS:
1522 9th AVENUE
HELENA, MT 59601

TEL 406.841.4000
FAX 406.841.4004
fwp.mt.gov/Doing Business/Design&Construction

DRAWING INDEX

SHEET 1 : COVER
SHEET 2 : OVERALL SITE PLAN
SHEET 3 : BOAT RAMP PLAN AND PROFILE
SHEET 4 : CAST IN PLACE RAMP DETAILS
SHEET 5 : PUSH-IN SLAB DETAILS
SHEET 6 : DETAILS

MONTANA PROFESSIONAL ENGINEER
TROY MONROE
No. 16465PE
3-22-16
LICENSED

J. Kevin McDonnell	12.2015	Troy Monroe	3.21.2016		
DRAWN BY:	DATE:	APPROVED BY:	DATE:	APPROVED BY:	DATE:
Troy Monroe	3.21.2016				
CHECKED BY:	DATE:	APPROVED BY:	DATE:	APPROVED BY:	DATE:

Montana Fish, Wildlife & Parks

COVER
Varney Bridge FAS near Ennis, MT

SHEET: 1 of 6

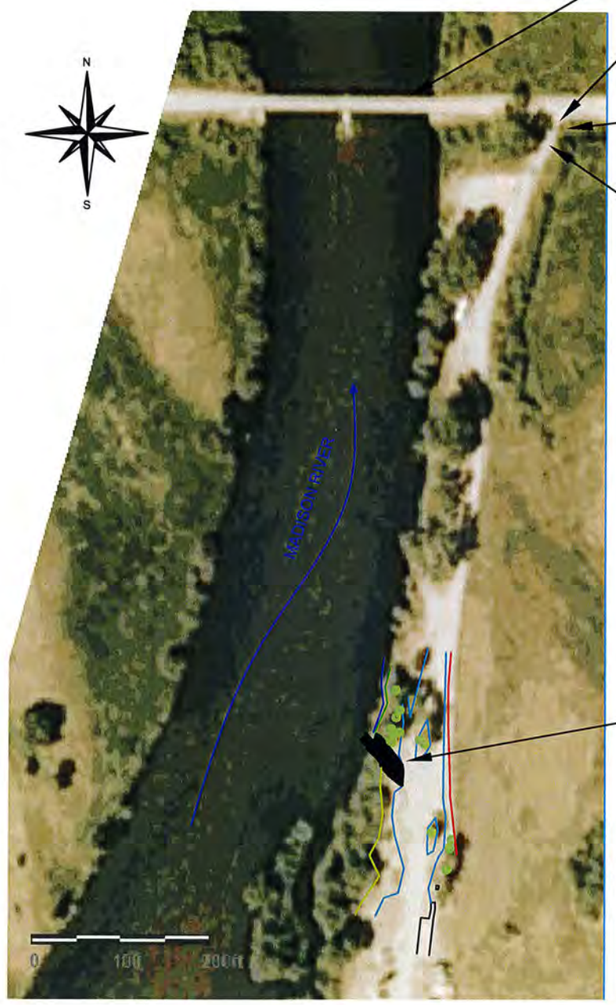

VARNEY BRIDGE
ON HWY 249

REMOVE 24 " CULVERT
INSTALL CATTLE GUARDS

INSTALL JACK LEG FENCE

REMOVE 12' x 5' CATTLE GUARD
AND FILL TO ROAD ELEVATION

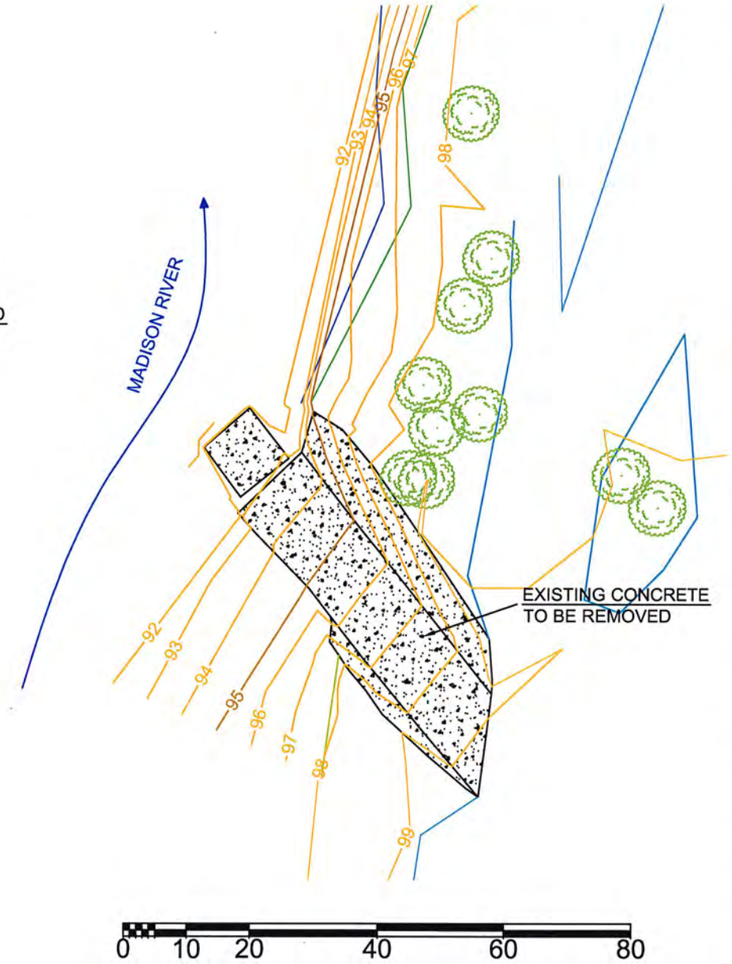

VARNEY BRIDGE FAS

MONTANA
TROY MONROE
No. 16465PE
3-22-16
LICENSED
PROFESSIONAL ENGINEER

LEGEND
MAJOR CONTOUR (5 FOOT INTERVAL)
MINOR CONTOUR (1 FOOT INTERVAL)
ROADS AND PARKING- EXISTING
FENCE
WATERLINE (8/2015)
COTTON WOOD TREE
FIRE RING
PICNIC TABLE
CONCRETE - EXISTING

Notes:

1) FWP Engineer will provide horizontal and vertical control..

2) The Contractor shall use best management practices to prevent silt, soil and debris from entering the water. This may include straw wattle, gravel or fabric. Temporary dikes to divert rainwater may be used, provided they are removed and the gravel or soil returned to the original condition. Exposed soil may require straw or similar cover to minimize erosion caused by rain. Other appropriate methods may be used at the Contractors' discretion or as directed by the owner.

3) Equipment used in or near water shall not leak fluids. It shall be power washed before use on the site and examined by the engineer.

4) All excess excavated material suitable as topsoil, shall be placed on the cut slopes. All areas disturbed during construction shall be seeded. Refer to Section 02936. Excavated materials not suitable for topsoil shall be used as fill.

5) Remove existing concrete boat ramp, planks and adjacent concrete bank protection, and dispose of in a safe and legal manner. The existing concrete is approximately 1150 square and of varying thickness.

6) Excavate to new ramp sub-grade, and place gravel to grade. Cut and fill slopes shall be graded at 3:1 from the edge of drainrock or ramp to existing river bank slopes.

7) The actual lengths of the cast-in-place and push-in ramp sections may vary due to water levels. Unit costs will be used to adjust quantities for compensation.

8) Cast - in - place ramp grade includes a vertical curve from ramp grade to parking area grade.

9) Remove all construction debris from site, and blend parking grades to new boat ramp, and replace the surface gravel on the parking area, as necessary.

10) Install erosion control blanket as shown on Sheet 6 Slope Stabilization SectionDetail on the cut slope adjacent to the downstream side of the boat ramp. The surface area of the instllation is 340 square feet.

11) Remove the existing 24" culvert at the access road entrance. The culvert is to become the property of the contractor to dispose of in a safe and legal manner. Install the precast concrete support logs and FWP supplied cattle guards as shown in the details on Sheet 6.

12) Remove the existing cattle guard and wings. Use 1" (-) crushed base to fill void from the cattle guard removal level to adjacent road and compact.

13) Install jack leg fence as shown on the details on Sheet 6. Connect jack fence to existing fence.

14) The contractor is responsible for locating and protecting utilities within the construction area including access routes to the construction area.

15) The contractor is required to notify and coordinate all work activities with the FWP Project Engineer. Public notification of site closure may be necessary, and requires a minimum notice of seven days.

16) Submittals are required on all products used in the project. Refer to specifications for submittal requirements.

17) Provide methods, means, and facilities to prevent contamination of soil, water, and atmosphere from discharge of noxious, toxic substances, and pollutants produced by construction operations.

18) Provide all temporary signing, personnel and traffic control devises as required by federal, state and local regulations.

19) Geotechnical Information: The soils at the site are sandy loams stratified with coarse sand and gravel. the depth to a restrictive feature is over 80 inches.

20) The Owner is responsible for obtaining all necessary permits.

J. Kevin McDonnell	12.2015	Troy Monroe	3.21.2016		
DRAWN BY:	DATE:	REVISED BY:	DATE:	APPROVED BY:	DATE:
Troy Monroe	3.21.2016				
CHECKED BY:	DATE:	APPROVED BY:	DATE:	APPROVED BY:	DATE:

Montana Fish, Wildlife & Parks

BOAT RAMP SITE PLAN
Varney Bridge FAS near Ennis, MT

SHEET: 2 of 6

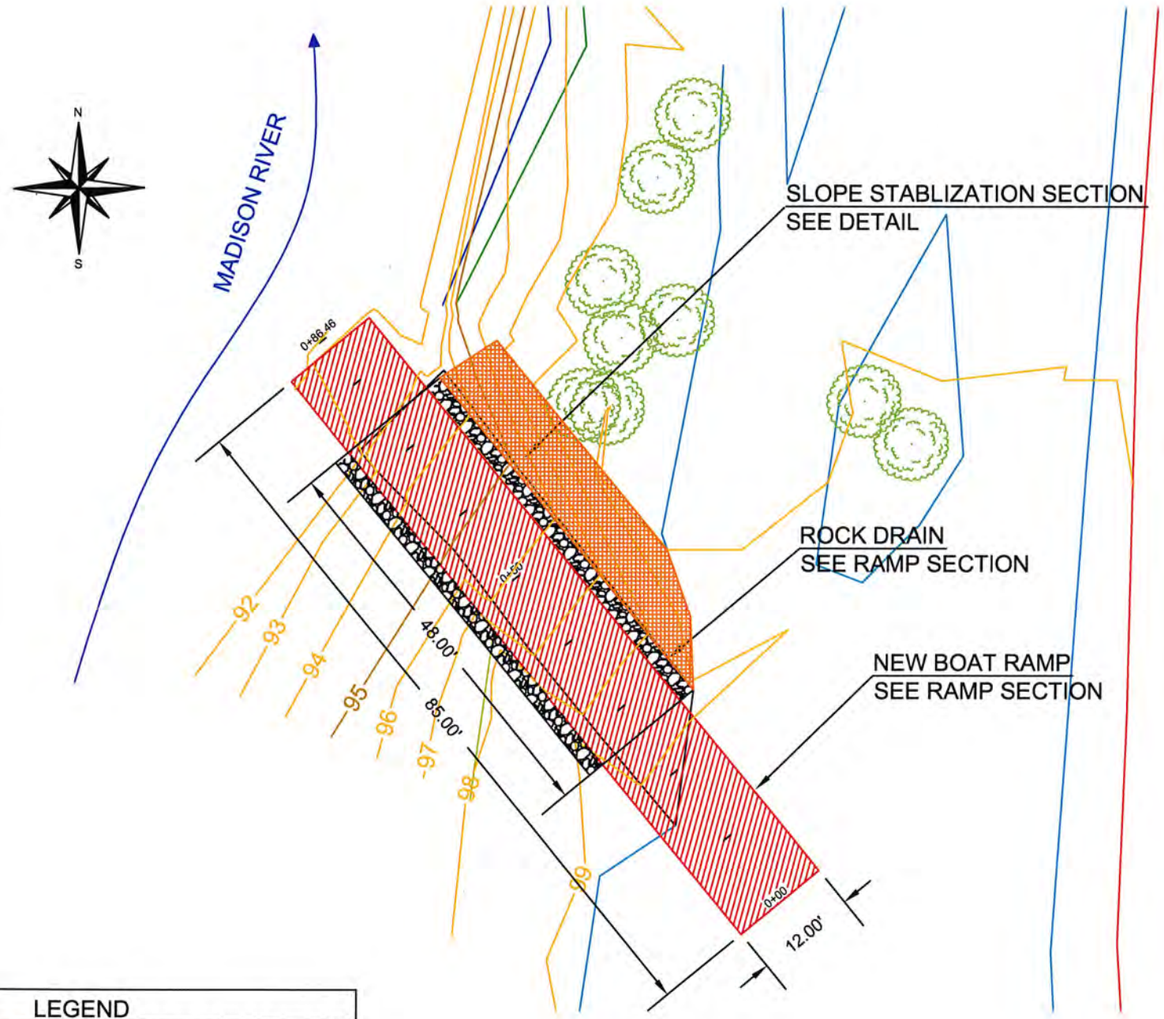

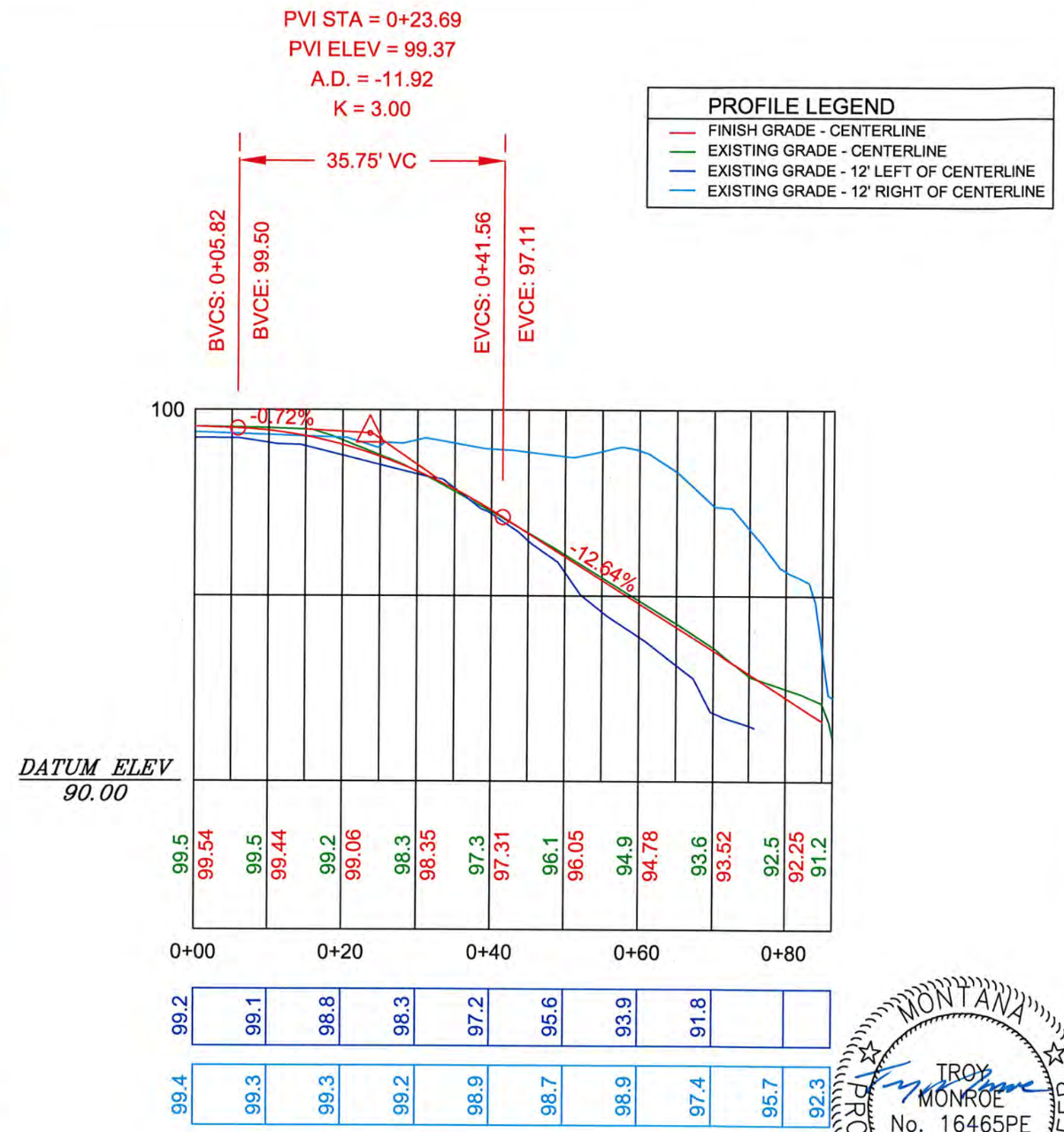

LEGEND

- MAJOR CONTOUR (5 FOOT INTERVAL)
- MINOR CONTOUR (1 FOOT INTERVAL)
- ROADS AND PARKING- EXISTING
- FENCE
- BOATRAMP - NEW
- WATERLINE (8/2015)
- COTTON WOOD TREE
- FIRE RING
- PICNIC TABLE
- DRAIN ROCK

0 10 20 40 60 80

MONTANA PROFESSIONAL ENGINEER
TROY MONROE
No. 16465PE
3-22-16
LICENSED

J. Kevin McDonnell	12.2015	Troy Monroe	3.21.2016		
DRAWN BY:	DATE:	REVISED BY:	DATE:	APPROVED BY:	DATE:
Troy Monroe	3.21.2016				
CHECKED BY:	DATE:	APPROVED BY:	DATE:	APPROVED BY:	DATE:

Montana Fish, Wildlife & Parks

BOAT RAMP SITE PLAN AND PROFILE

Varney Bridge FAS near Ennis, MT

SHEET: 3 of 6

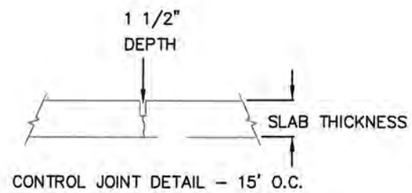

SAW CUT CONTROL JOINT

STEEL REINFORCEMENT:
1) SEE BOAT RAMP FOOTING DETAIL
2) PLACE #4 REBAR 1' O.C. EACH WAY IN SLAB
3) MINIMUM COVER - 2"
4) MINIMUM COVER TO GROUND - 3"

DRAIN ROCK:
2 - 4" WASHED ROCK (MINIMAL DIRT AND SAND). 24" WIDE TRENCH DRAIN. ROCK PLACED ON KEYED-IN FILTER FABRIC (PROPEX 200 OR SIMILIAR). FILTER FABRIC TO SERVE AS SEPARATION BETWEEN EARTH AND DRAIN ROCK.

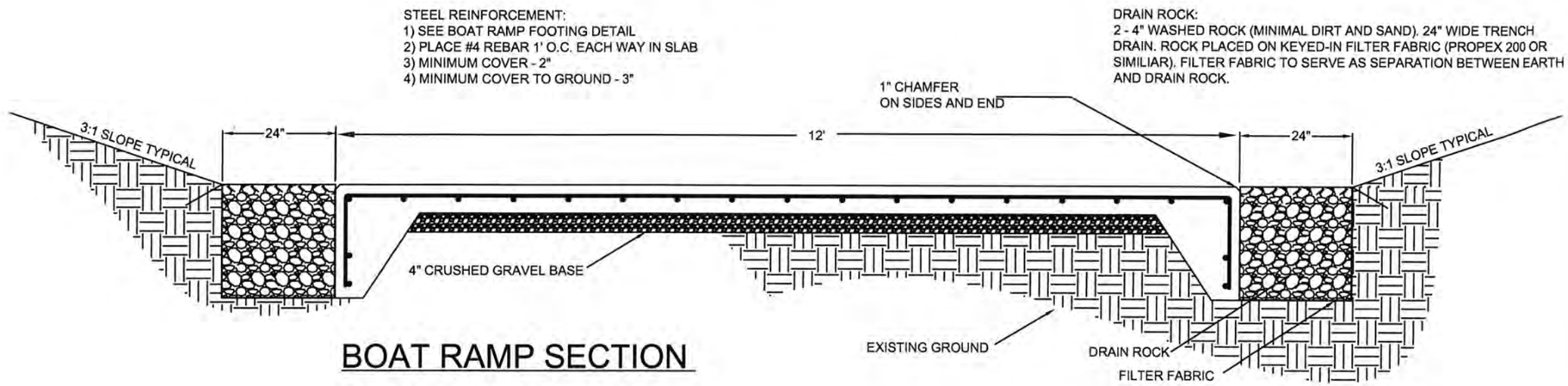

BOAT RAMP SECTION

THICKENED SLAB EDGE TYPICAL FOR ALL SIDES OF THE RAMP.

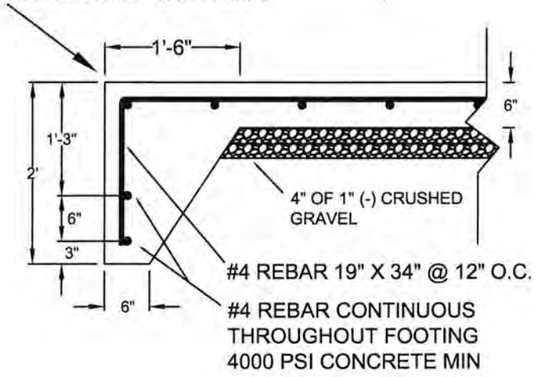

BOAT RAMP FOOTING DETAIL

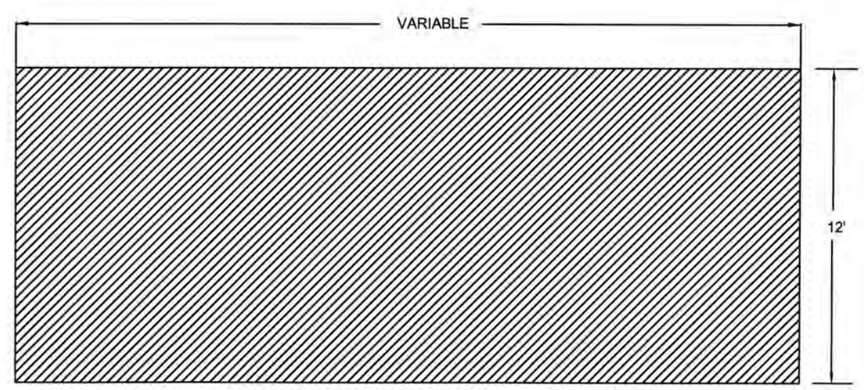

NOTES:
1. ANGLE GROOVES AT 30 DEGREES DOWNWARD IN THE DIRECTION OF STREAMFLOW OR DOWNWIND SIDE OF RAMP ON LAKES.

2. THE GROOVES ARE 1 $\frac{1}{2}$" DEEP. GROOVING TOOL WILL BE FURNISHED BY FWP.

CAST-IN-PLACE CONCRETE BOAT RAMP

NOT TO SCALE PLAN VIEW

MONTANA PROFESSIONAL ENGINEER
TROY MONROE
No. 16465PE
3-22-16
LICENSED

J. Kevin McDonnell	12.2015	Troy Monroe	3.21.2016		
DRAWN BY:	DATE:	REVISED BY:	DATE:	APPROVED BY:	DATE:
Troy Monroe	3.21.2016				
CHECKED BY:	DATE:	APPROVED BY:	DATE:	APPROVED BY:	DATE:

Montana Fish, Wildlife & Parks

CONCRETE RAMP
Varney Bridge FAS near Ennis, MT

SHEET: 4 of 6

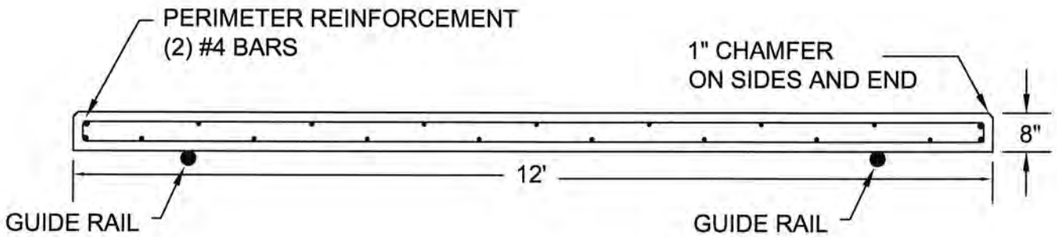

PUSH IN SLAB CROSS SECTION

NOT TO SCALE

NOTES:

1) FORM PUSH-IN SLAB ON BOAT RAMP GRADE ABOVE THE WATER LEVEL.
2) CONSTRUCT SUB-GRADE TO FULLY SUPPORT THE PUSH-IN SLAB.
3) INSTALLED TOP OF SLAB ELEVATION TO MATCH AS EVENLY AS POSSIBLE TO RIVER BED ELEVATIONS.
4) REINFORCEMENT: 2 MATS CONSISTING OF #4 GRADE 40 REBAR 2' O.C. EACH WAY, OFFSET MATS 1', ALLOW 2" OF CONCRETE COVER, EACH BAR SHALL HAVE A 4" HOOK OVER THE PERIMETER BAR.
5) INSTALL 48" #4 REBAR DOWELS AT 12" O.C. THROUGH KEYWAY CAST INTO PUSH-IN SLAB TO RECEIVE CAST -IN-PLACE RAMP SECTION. DOWELS SHALL EXTEND 24" INTO AND OUT OF SLAB.
6) KEYWAY BLOCK OUT SHALL BE APPROVED PRE-MANUFACTURED TYPE OR WOOD WITH A MINIMUM DIMENSION AS SHOWN.
7) PLACE 4 MIL PLASTIC ON GRADE BEFORE PLACING THE CONCRETE TO ACT AS SEPARATION BETWEEN THE WET CONCRETE AND SUB GRADE, AND PROVIDE SLIP PLANE WHEN PUSHING THE SLAB INTO POSITION.
8) 3" SCHED 80 STEEL PIPES, OR OTHER APPROVED STEEL SECTIONS, SHALL BE PLACED BELOW THE SLAB ELEVATION EXTENDING PAST THE FINAL END POSITION OF THE SLAB, AND USED TO GUIDE THE SLAB INTO POSITION. STEEL GUIDES MAY BE REMOVED AFTER SLAB INSTALLATION.
9) THE PUSH IN SLAB FINISH SHALL HAVE THE SAME GROOVED FINISH AS THE CAST-IN- PLACE BOAT RAMP. FWP WILL PROVIDE GROOVING TOOL.
10) ALLOW SEVEN (7) DAYS OF CURING TIME BEFORE THE PUSH IN SLAB IS INSTALLED. FWP ENGINEER MAY APPROVE SHORTER CURE TIMES IF A HIGHER STRENGHTH CONCRETE IS USED.
11) REMOVE FORMS AND PUSH CURED SLAB INTO FINAL POSITION USING EQUIPMENT OF SUFFICIENT SIZE AND PROTECTING THE SLAB FROM DAMAGE.
12) BACKFILL THE SIDES AND END OF THE SLAB WITH CLEAN AGGREGATE.
13) ABOVE WATER CAST-IN-PLACE RAMP IS CONSTRUCTED AFTER BELOW WATER PUSH-IN SECTION IS INSTALLED.
14) LENGTHS OF THE SLABS MAY VARY ACCORDING TO WATER LEVELS, AND COMPENSATION WILL BE BASED ON THE UNIT COST AS BID. DIMENSIONS ARE ESTIMATED FOR BIDDING PURPOSES.

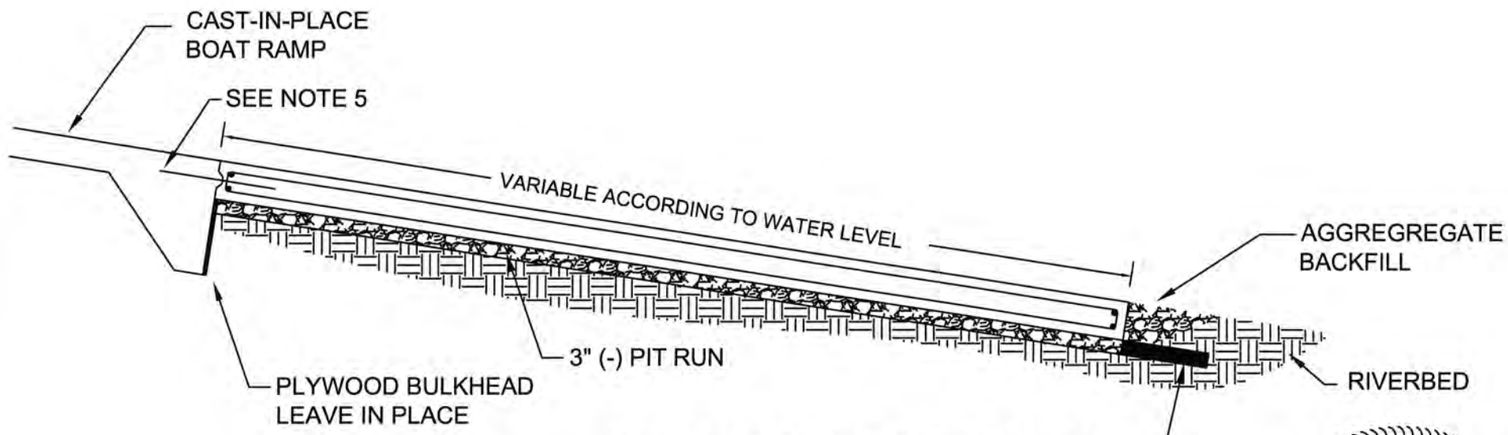

PUSH-IN SLAB PROFILE SECTION

NOT TO SCALE

STEEL GUIDE SECTION TO BE PLACED AT RAMP GRADE, AND TO EXTEND FROM UNDER THE SLAB AT THE LOCATION ON GRADE WHERE THE SLAB IS CONSTRUCTED TO A POINT BEYOND THE FINAL LOCATION OF THE END OF THE SLAB. GUIDE MAY BE REMOVED AFTER THE SLAB IS POSITIONED.

MONTANA
TROY MONROE
No. 16465PE
3-22-16
LICENSED
PROFESSIONAL ENGINEER

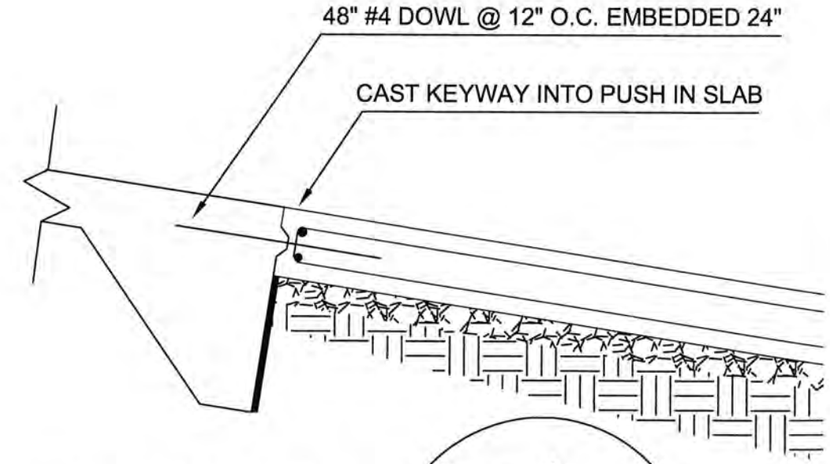

CONNECTION DETAIL

NOT TO SCALE

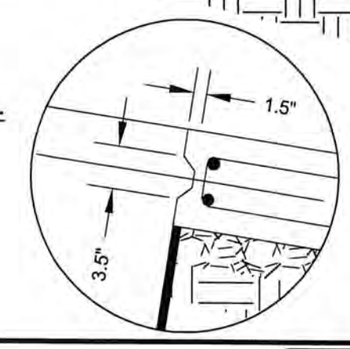

J. Kevin McDonnell	12.2015	Troy Monroe	3.21.2016		
DRAWN BY:	DATE:	REVISED BY:	DATE:	APPROVED BY:	DATE:
Troy Monroe	3.21.2016				
CHECKED BY:	DATE:	APPROVED BY:	DATE:	APPROVED BY:	DATE:

Montana Fish, Wildlife & Parks

PUSH-IN SLAB

Varney Bridge FAS near Ennis, MT

SHEET: 5 of 6

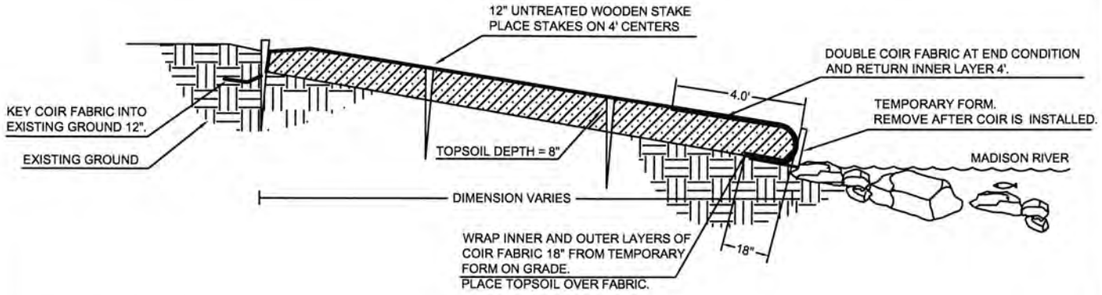

SLOPE STABILIZATION SECTION DETAIL

NOT TO SCALE

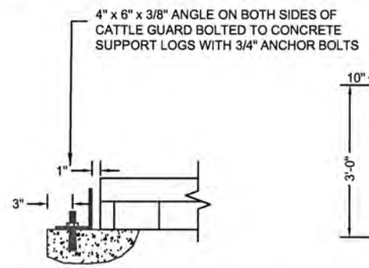

ANCHOR DETAIL

NO SCALE

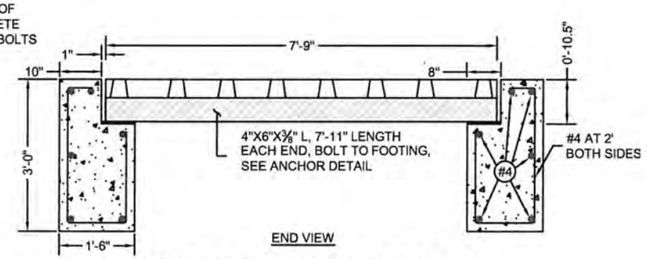

CATTLE GUARD DETAIL

NO SCALE

NOTES:

1. ALL REBAR #4 AND WILL HAVE 2" COVER.
2. ENSURE THAT THE ELASTOMERIC BEARING PADS ARE 50 DUROMETER IN HARDNESS.
3. PLACE THE CATTLE GURAD ON BASE AGGREGATE, 3" MINIMUM THICKNESS OVER LEVELED SOIL COMPACTED TO 95% DENSITY.

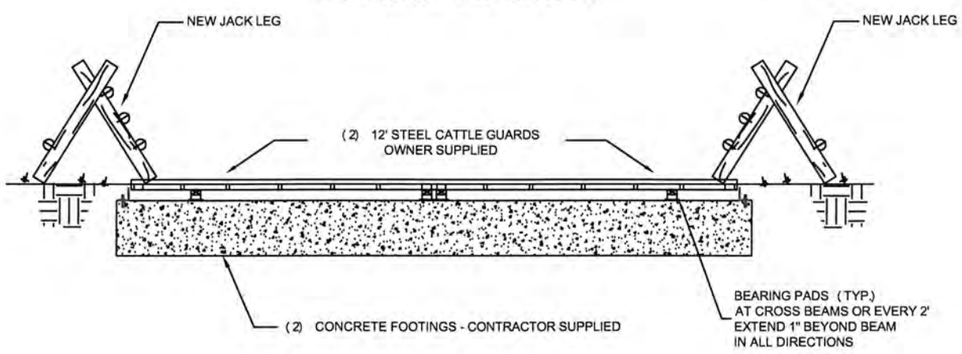

ELEVATION VIEW

CATTLE GUARD DETAIL

NO SCALE

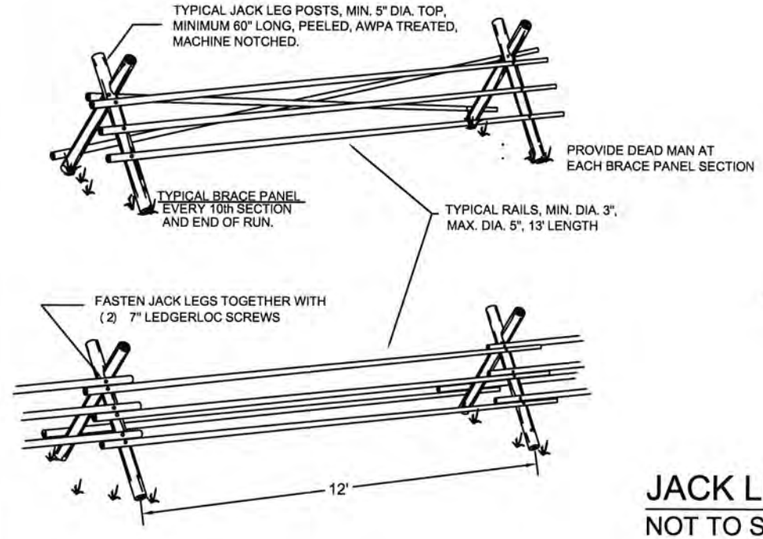

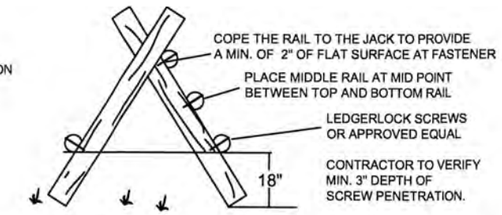

JACK LEG RAIL FENCE DETAIL

NOT TO SCALE

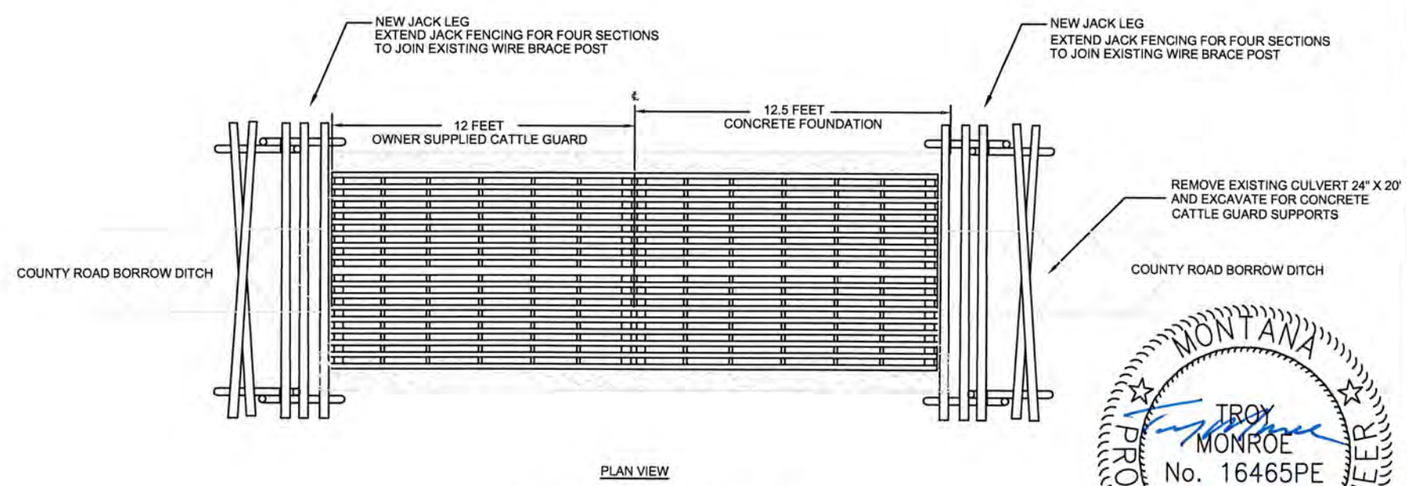

PLAN VIEW

CATTLE GUARD DETAIL

NO SCALE

MONTANA
TROY MONROE
No. 16465PE
3-22-16
LICENSED
PROFESSIONAL ENGINEER

J. Kevin McDonnell	12.2015	Troy Monroe	3.21.2016		
DRAWN BY:	DATE:	REVISED BY:	DATE:	APPROVED BY:	DATE:
Troy Monroe	3.21.2016				
CHECKED BY:	DATE:	APPROVED BY:	DATE:	APPROVED BY:	DATE:

Montana Fish, Wildlife & Parks

DETAILS

Varney Bridge FAS near Ennis, MT

SHEET: 6 of 6