INDEX OF ELECTRICAL SHEETS

E0.0	ELECTRICAL PLAN INDEX
E1.0	ELECTRICAL WORK
E2.0	ELECTRICAL WORK
E3.0	SHELTER DETAILS
E4.0	CATALOG SHEETS
E5.0	SPECIFICATIONS
E5.1	SPECIFICATIONS

GENERAL PROJECT NOTES

A. COORDINATE THE INSTALLATION OF ELECTRICAL MATERIAL ITEMS WITH THE PROJECT ENGINEER.

B. FIELD VERIFY DIMENSIONS AND INSTALLED INFRASTRUCTURE USING THE CIVIL ENGINEERING DRAWINGS.

C. SCHEDULE 80 PVC SLEEVES SHALL BE USED TO PROTECT THE UNDERGROUND FEEDERS AND BRANCH CIRCUITS WHEN PASSING UNDER PAVEMENT (TRAILS AND ROADWAYS) AND NON-PAVED TRAILS AND ROADWAYS.

SCHEDULE 80 PVC SLEEVES SHALL ALSO BE USED TO PROTECT UNDERGROUND FEEDERS AND BRANCH CIRCUITS WHEN THEY ARE INSTALLED ABOVE BURIAL DEPTH. SLEEVES SHALL BE TERMINATED WITH A SWEEP ELBOW AT BURIAL DEPTH.

D. THE WORD 'CONTRACTOR' ON THESE ELECTRICAL DRAWINGS MEANS THE ENTIRE CONTRACTOR TEAM.

E. COMPLY WITH PROVISIONS OF APPLICABLE CODES AND REQUIREMENTS FROM LOCAL AUTHORITIES HAVING JURISDICTION. IN THE EVENT OF CONFLICTING GUIDELINES BETWEEN MULTIPLE DIRECTIVES, THE MOST RESTRICTIVE WILL PREVAIL.

F. CONTRACTOR IS RESPONSIBLE FOR COORDINATION OF PROJECT REQUIREMENTS AND PROVISION OF ADEQUATE AND TIMELY INFORMATION TO ALL TRADES CONCERNED FOR MATTERS INVOLVING MULTIPLE TRADES.

G. THE CONTRACTOR IS RESPONSIBLE FOR OBTAINING ALL UTILITY LOCATES.

H. CATALOG SHEETS ARE INCLUDED WITH THE DRAWING SET FOR CONTRACTOR UNDERSTANDING. THE CONTRACTOR SHALL OBTAIN A COMPLETE DRAWING PACKAGE FOR BOTH BIDDING AND CONSTRUCTION. ANYTHING LESS WILL PROVIDE INSUFFICIENT INFORMATION FOR THE CONTRACTOR TO PROPERLY BID AND CONSTRUCT THIS PROJECT.

I. SPECIFICATIONS ARE INCLUDED IN THIS DRAWING SET.

J. THE ELECTRICAL CONTRACTOR SHALL CAREFULLY EXAMINE THE CIVIL ENIGNEERING DRAWINGS AND THE BID FORM TO DETERMINE HOW THE ELECTRICAL AND ASSOCIATED WORK AS DESCRIBED ON THESE SHEETS AND ANY OTHER DRAWINGS BY REFERENCE, MUST BE BID WITH RESPECT TO BASE BIDS AND ALTERNATIVES.

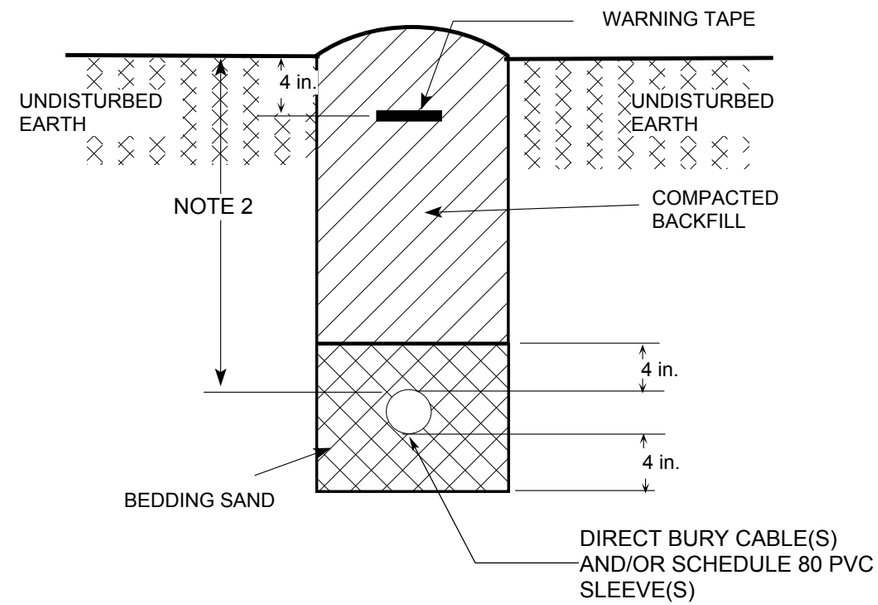

NOTES:

1. SINGLE CONDUIT SHOWN. MULTIPLE CONDUITS CAN BE USED.
2. BURIAL DEPTH 24 INCHES MINIMUM.
3. IF MORE THAN ONE CABLE OR CONDUIT OF THE SAME FACILITY IS INSTALLED IN A TRENCH, THE CONDUITS SHALL BE SEPARATED BY 9 INCHES MINIMUM.
4. INSTALL CONDUITS 24 INCHES (UNLESS OTHERWISE NOTED) BELOW FOOTING FOUNDATION OR PAVEMENT BASE FILL.
5. CONDUIT OR CONDUITS SHALL NOT BE LOCATED ANY CLOSER THAN 3 INCHES FROM TRENCH SIDE WALL.

TRENCHING AND BEDDING DETAIL

NOT TO SCALE

CONSULTING AND DESIGN
FUSSELL ENGINEERING
2435 DIXON STREET MISSOULA, MT 59801
(406) 721-6996 fus@aol.com
MONTANA MICHAEL T. FUSSELL 7982 E REGISTERED PROFESSIONAL ENGINEER

M. FUSSELL FEB 7, 2016	REVISED BY: DATE:	APPROVED BY: DATE:	
DRAWN BY: DATE:			
M. FUSSELL FEB 7, 2016	APPROVED BY: DATE:	APPROVED BY: DATE:	
CHECKED BY: DATE:			

Montana Fish, Wildlife & Parks

WHITEFISH & WAYFARERS ELE. PLAN

RECREATIONAL BICYCLE CAMPING PROJECT
WHITEFISH LAKE AND WAYFARERS STATE PARKS
FWP #7166601

LARSON CIVIL ENGINEERING, LLC
28 ANTLER AVENUE
CLANCY, MT 59634
406-443-6111
jeff@larsonce.com

SHEET: E 0.0

SQUARE D NQOD PANEL

PHOTO E1.0-1 EXISTING PANEL IN EXISTING BUILDING

THE CONTRACTOR SHALL FURNISH AND INSTALL A SINGLE POLE 20 AMP BREAKER IN AN AVAILABLE SLOT.

FURNISH AND INSTALL 3 — #12 COPPER THWN CONDUCTORS (HOT, NEUTRAL, GROUND) IN A SCHEDULE 80 PVC CONDUIT.

ROUTE THE CONDUIT OUT OF THE BOTTOM OF THIS EXISTING PANEL AND THENCE AROUND THE BUILDING INTERIOR WALL AS INDICATED ON PHOTOS #3, #4, & #5 THIS SHEET.

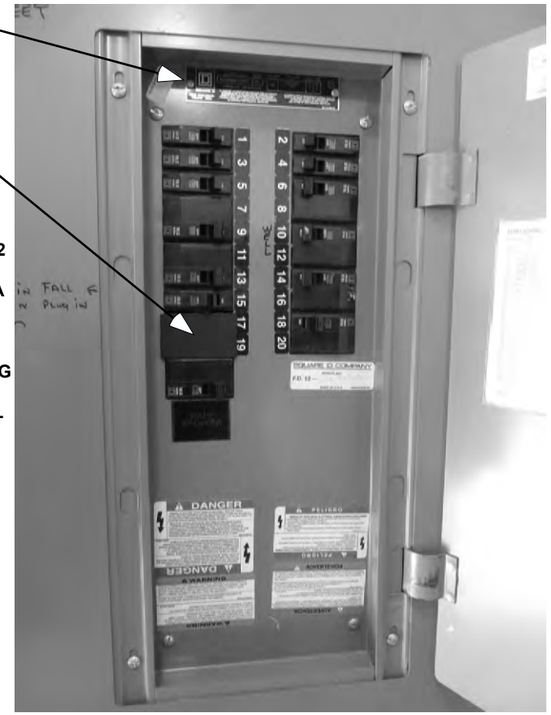

PHOTO E1.0-2 EXISTING PANEL IN EXISTING BUILDING

ROUTE THE CONDUIT SURFACE MOUNTED ON THE EXISTING WALL ADJACENT TO THE EXISTING CONDUITS. ROUTE THE NEW CONDUIT AROUND THE CORNER UNDERNEATH THE EXISTING CONTROL PANEL.

PHOTO E1.0-3 ROUTE OF THE CONDUIT (NOTE OVERLAP OF PHOTOS)

ROUTE THE CONDUIT SURFACE MOUNTED ON THE EXISTING WALL ADJACENT TO THE EXISTING CONDUITS; THENCE AROUND THE CORNER UNDERNEATH THE EXISTING CONTROL PANEL TO THE EXISTING JUNCTION/PULL BOX LOCATION AS INDICATED.

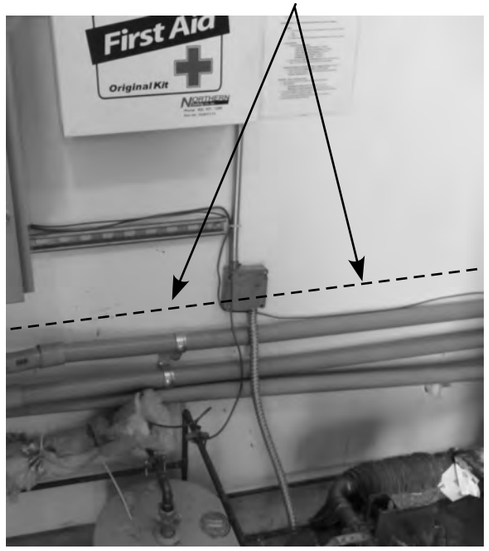

PHOTO E1.0-4 ROUTE OF THE CONDUIT (NOTE OVERLAP OF PHOTOS)

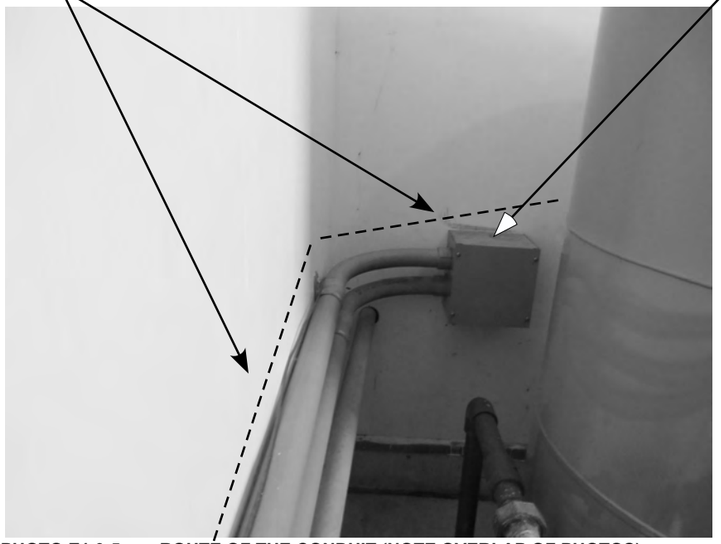

PHOTO E1.0-5 ROUTE OF THE CONDUIT (NOTE OVERLAP OF PHOTOS)

ADD J-BOX/PULLBOX IN ORDER TO GO THROUGH THE EXTERIOR WALL IN THE SAME MANNER AS THE EXISTING CONDUITS/CONDUCTORS.

ADJUST PULLBOX LOCATION TO AVOID WALL PENETRATION CONFLICTS

ROUTE THE SCHEDULE 80 PVC CONDUIT OUTSIDE SURFACE MOUNTED ON THE EXTERIOR OF THE BUILDING DOWN TO AN IN-THE-GROUND JUNCTION BOX NEAR THE BASE OF THE BUILDING.

IN THE IN-THE-GROUND JUNCTION BOX TRANSISTION FROM THE #12 COPPER CONDUCTORS TO #6 AL USE CONDUCTORS. USE LISTED WATERPROOF CONNECTORS FOR BOTH THE SIZE CHANGE AND CU TO AL.

FURNISH AND INSTALL THE THREE #6 AL USE (HOT, NEUTRAL, GROUND) CONDUCTORS DIRECT BURY USING THE TRENCH DETAIL. BE SURE AND COLOR CODE TWO OF THE THREE CONDUCTORS FOR BEING USED AS A GROUND AND A NEUTRAL CONDUCTOR RESPECTIVELY.

AT THE SHELTER END OF THE BRANCH CIRCUIT, REVERSE THE CONDUCTOR CHANGE USING AN IN-THE-GROUND JUNCTION BOX NEAR THE THE SHELTER SUPPORT POST. FURNISH AND INSTALL 3 — #12 CU CONDUCTORS (HOT, NEUTRAL, GROUND) IN A SCHEDULE 80 PVC CONDUIT. ROUTE THE CONDUIT FROM THE IN-THE-GROUND JUNCTION BOX TO THE SHELTER ELECTRCAL SYSTEM.

SEE SHELTER DRAWING, E3.0.

CONSULTING AND DESIGN
FUSSELL ENGINEERING
2435 DIXON STREET MISSOULA, MT 59801
(406) 721-6996 fus@aol.com

MONTANA MICHAEL T. FUSSELL 7952 E REGISTERED PROFESSIONAL ENGINEER

M. FUSSELL FEB 7, 2016	REVISED BY: DATE:	APPROVED BY: DATE:	
DRAWN BY: DATE:			
M. FUSSELL FEB 7, 2016	APPROVED BY: DATE:	APPROVED BY: DATE:	
CHECKED BY: DATE:			

Montana Fish, Wildlife & Parks

WHITEFISH LAKE ELECTRICAL WORK

RECREATIONAL BICYCLE CAMPING PROJECT
WHITEFISH LAKE AND WAYFARERS STATE PARKS
FWP #7166601

LARSON CIVIL ENGINEERING, LLC
28 ANTLER AVENUE
CLANCY, MT 59634
406-443-6111
jeff@larsonce.com

SHEET: E 1.0

031016

PHOTO E2.0-1 EXISTING SITE PANEL

THE EXISTING SITE PLAN MAIN PANEL IS TO BE USED FOR SUPPLYING THE SHELTER.

VARIOUS VIEWS ARE INCLUDED ON THIS SHEET TO SHOW THE SITE PANEL CONFIGURATION.

PHOTO E2.0-2 EXISTING SITE PANEL

PHOTO E2.0-3 EXISTING SITE PANEL SHOWING AVAILABLE SLOTS

THE CONTRACTOR SHALL FURNISH AND INSTALL A SINGLE POLE 20 AMP BREAKER IN AN AVAILABLE SLOT.

FURNISH AND INSTALL 3 — #12 COPPER THWN CONDUCTORS (HOT, NEUTRAL, GROUND) IN A SCHEDULE 80 PVC CONDUIT. ROUTE THE CONDUIT DOWN TO AN IN-THE-GROUND JUNCTION BOX NEAR THE BASE OF THE POLE.

IN THE IN-THE-GROUND JUNCTION BOX TRANSISTION FROM THE #12 COPPER CONDUCTORS TO #6 AL USE CONDUCTORS. USE LISTED WATERPROOF CONNECTORS FOR BOTH THE SIZE CHANGE AND CU TO AL.

FURNISH AND INSTALL THE THREE #6 AL USE (HOT, NEUTRAL, GROUND) CONDUCTORS DIRECT BURY USING THE TRENCH DETAIL. BE SURE AND COLOR CODE TWO OF THE CONDUCTORS FOR BEING A GROUND AND A NEUTRAL CONDUCTOR RESPECTIVELY.

AT THE SHELTER END OF THE BRANCH CIRCUIT, REVERSE THE CONDUCTOR CHANGE USING AN IN-THE-GROUND JUNCTION BOX NEAR THE THE SHELTER SUPPORT POST. FURNISH AND INSTALL 3 — #12 CU CONDUCTORS (HOT, NEUTRAL, GROUND) IN A SCHEDULE 80 PVC CONDUIT. ROUTE THE CONDUIT FROM THE IN-THE-GROUND JUNCTION BOX TO THE SHELTER ELECTRCAL SYSTEM.

(NOTE: 10-2 UF WITH GROUND IS TOO SMALL FOR THE VOLTAGE DROPS AND #6 AL USE IS THE LEAST COST FOR A LARGER SIZED WIRE.)

SEE SHELTER DRAWING E3.0.

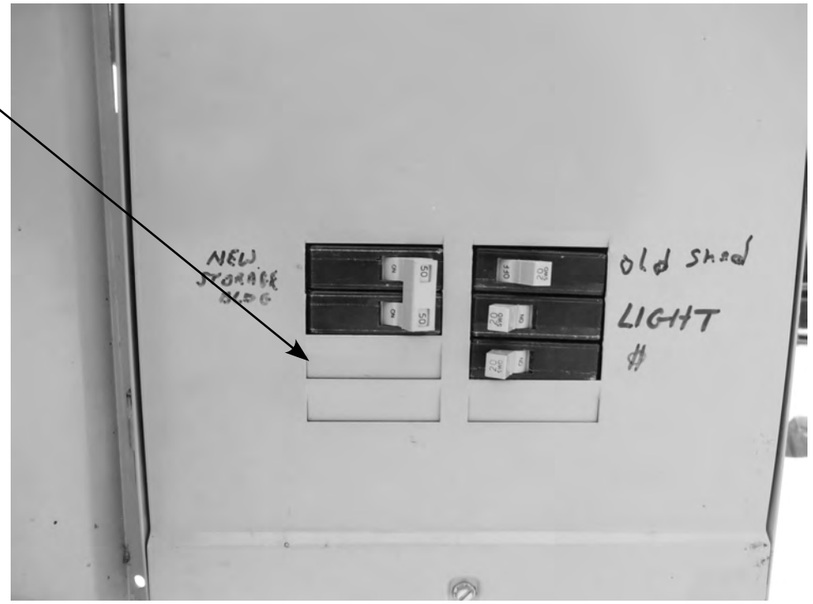

PHOTO E2.0-4 EXISTING SITE PANEL SHOWING AVAILABLE SLOTS

CONSULTING AND DESIGN
FUSSELL ENGINEERING
2435 DIXON STREET (406) 721-6996
MISSOULA, MT 59801 fus@aol.com

MONTANA MICHAEL T. FUSSELL 7982 E REGISTERED PROFESSIONAL ENGINEER

M. FUSSELL FEB 7, 2016 DRAWN BY: DATE: M. FUSSELL FEB 7, 2016 CHECKED BY: DATE:	REVISED BY: DATE: APPROVED BY: DATE:	APPROVED BY: DATE: APPROVED BY: DATE:	Montana Fish, Wildlife & Parks

WAYFARERS ELECTRICAL WORK
RECREATIONAL BICYCLE CAMPING PROJECT
WHITEFISH LAKE AND WAYFARERS STATE PARKS
FWP #7166601

LARSON CIVIL ENGINEERING, LLC
28 ANTLER AVENUE
CLANCY, MT 59634
406-443-6111
jeff@larsonce.com

SHEET: E 2.0

031016

SHEET GENERAL NOTES

A. THE STRUCTURE IS POWDER COATED SO THE CONTRACTOR MUST BE CAREFUL TO MAINTAIN THE POWDER COATED INTEGRITY WHEN INSTALLING THE ELECTRICAL SYSTEMS SUCH AS RECEPTACLES.

B. BE SURE TO ORDER FACTORY CUT OUTS AS DESCRIBED ON THIS SHEET.

WITH THE APPROVAL OF THE PROJECT ENGINEER, ADD ACCESS HOLES WHERE REQUIRED FOR FISHING THE MC CABLE.

C. DRILLING HOLES IN THE STRUCTURE IN THE FIELD IS TO BE AVOIDED. SHOULD A HOLE BE REQUIRED, IT MUST BE PAINTED TO PROTECT THE WEATHER INTEGRITY OF THE STRUCTURE.

D. FROM MANUFACTURER'S REP:
Hello again, I talked to the factory about your questions, re: wiring through an entire structure. The contact for installation said that installers tie a piece of string through each member as they are installing the structure. Then when it's time for the wiring, they attach the string to it and pull it through the structure to the opening where they want it to come out. Thanks, Diana
Diana Ross
(l) 801-274-0212
/800-840-5410
(m) 801-712-9156
diana@goplayspace.com

SHEET SPECIFIC NOTES

1. UNDERGROUND DIRECT BURY BRANCH CIRCUIT (3 #6 AL USE) FOR POWER SOURCE. DIRECT BURIED IN ACCORDANCE WITH THE TRENCHING DETAIL.

2. IN-THE-GROUND JUNCTION BOX.

3. THE UNDERGROUND BRANCH CIRCUIT IS 3 — #12 CU THWN CONDUCTORS (HOT, NEUTRAL, GROUND) IN A SCHEDULE 80 PVC CONDUIT BURIED IN ACCORDANCE WITH THE TRENCHING DETAIL. CONDUIT AND CONDUCTORS ENTER THE SUPPORT TUBE BELOW THE BASE AS INDICATED. AT THE FACTORY CUT OUT, FURNISH AND INSTALL A JUNCTION BOX, RECESSED IF POSSIBLE.

IN THIS JUNCTION BOX TRANSITION FROM THE SUPPLY CONDUCTORS IN CONDUIT TO MC CABLE FOR PICNIC STRUCTURE WIRING.

BOND THE SUPPLY BRANCH CIRCUIT GROUND WIRE TO THE SHELTER STRUCTURE AT THIS LOCATION.

4. WIRING IN THE SHELTER SHALL BE MC CABLE, HOT, NEUTRAL AND GROUND, FISHED INSIDE THE STRUCTURE TUBES.

5. FURNISH AND INSTALL ONE NEMA 5-20R GFCI RECEPTACLE IN TWO LOCATIONS AS INDICATED. FURNISH AND INSTALL THE WEATHERPROOF COVER THAT MAINTAINS THE WEATHER PROTECTION WITH A CORD PLUGGED IN.

THE RECEPTACLE LOCATION SHOULD BE ON THE INSIDE OF THE SUPPORT COLUMN, 24 INCHES ABOVE THE TABLE SURFACE.

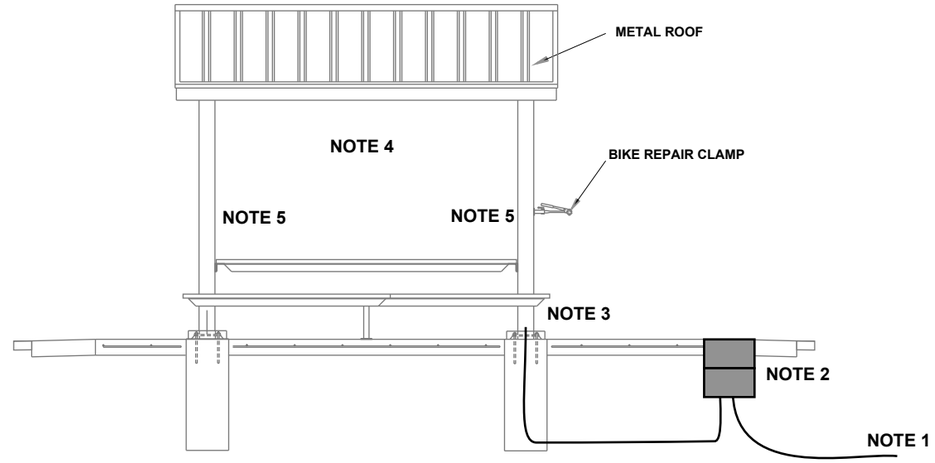

FRONT ELEVATION

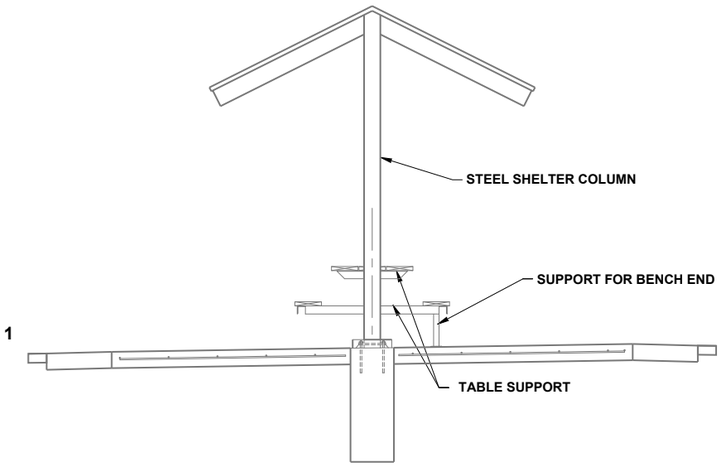

SIDE ELEVATION

poligon®

Electrical Access and Cutouts

What is Electrical Access?
- A 1-1/8" diameter hole is provided through the column baseplate.
- æî diameter holes are provided through connection plates to allow wire access up into compression ring/tube or ridge beam.
- Electrical access into additional members is available upon request.

What Are Electrical Cutouts?
- Round holes or rectangular cutouts in members required for installation of electrical fixtures or wire access.
- All cutout requests must be reviewed by our engineering department as their placement may affect structural integrity.
- Poligon is not responsible for unauthorized cutouts made in the field.
- Unauthorized electrical cutouts made in the field will void the shelter's warranty.
- To ensure a flush mounting of an electrical fixture, round columns will be equipped with a welded in enclosure that accommodates a standard UL listed box.

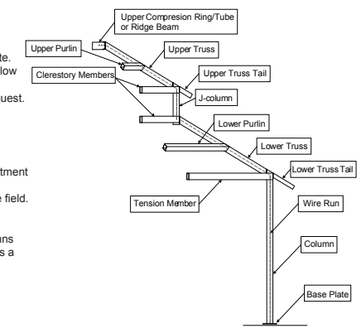

Instructions
- When ordering a structure, mark up the submittal drawings to accurately communicate cutout location and dimensions.
- If the submittal set is not available, mark up the sketches on this sheet with exact dimensions and locations.
- Cutout size must be communicated at the time of order.
- Indicate on which side of the member the cutout is to be located.
- If not specified to the bottom, center or top of the cutout, dimension will be taken from the bottom of the cutout.

Your frame may not look like the graphics shown.

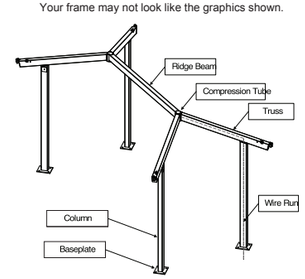

Definitions:
- Top Side: Side facing up; roof side.
- Bottom Side: Side facing down; toward grade.
- Interior Side: Inside face of the member.
- Exterior Side: Outside face of the member.
- Left Side: Left side of a column or truss when viewed from the exterior side of the structure.
- Right Side: Right side of column or truss when viewed from the exterior side of the structure.

Sample Cutout Location Callouts:
- "Electrical cutouts to be centered on every truss on the bottom side, total quantity of 4; cutout dimensions: 3/4" dia."
- "Single receptacle cutout 24" above grade to bottom of cutout on one column, interior face."

Typical Cutout Locations:
- Outlet cutouts are typically placed 18" above grade on the inside face of the column.
- Light switch cutouts are typically located 48" above grade on the inside face of the column.
- All cutouts are at least 12" from any structural joints.
- All cutouts are typically centered on the member wall and not close to the corners.
- Cutouts can be located through cover plates
- The standard rectangular cutout size is 2 1/4" x 4 1/8" and round cutout size is 3/4" diameter.

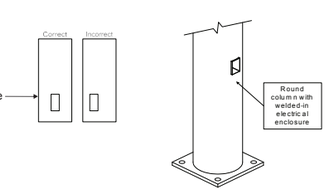

7.2fm09, Rev B 3/12/13

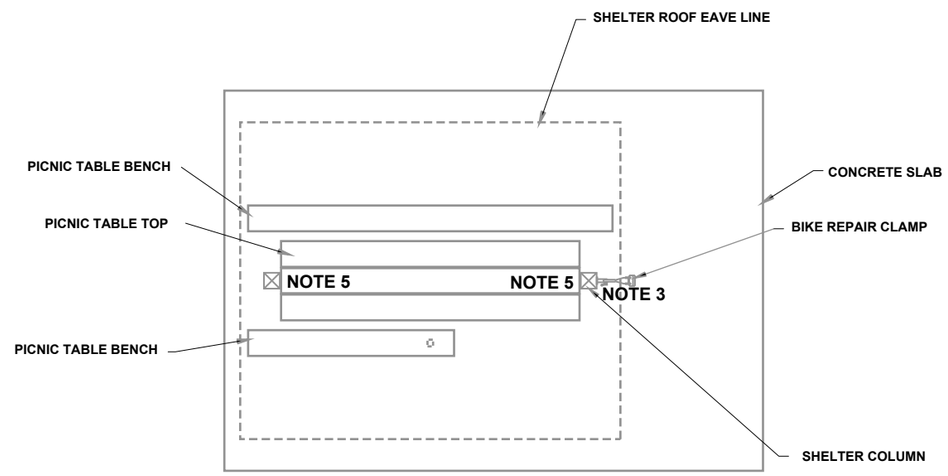

PLAN VIEW

10x12 PICNIC SHELTER

NO SCALE

CONSULTING AND DESIGN
FUSSELL ENGINEERING
2435 DIXON STREET MISSOULA, MT 59801
(406) 721-6996 fus@aol.com

MONTANA MICHAEL T. FUSSELL 7982 E REGISTERED PROFESSIONAL ENGINEER

M. FUSSELL FEB 7, 2016	REVISED BY: DATE:	APPROVED BY: DATE:	Montana Fish, Wildlife & Parks
DRAWN BY: DATE:			
M. FUSSELL FEB 7, 2016	APPROVED BY: DATE:	APPROVED BY: DATE:	
CHECKED BY: DATE:			

WHITEFISH & WAYFARERS ELE. WORK
RECREATIONAL BICYCLE CAMPING PROJECT
WHITEFISH LAKE AND WAYFARERS STATE PARKS
FWP #7166601

LARSON CIVIL ENGINEERING, LLC
28 ANTLER AVENUE
CLANCY, MT 59634
406-443-6111
jeff@larsonce.com

SHEET: E 3.0

031016

Quazite®

6X8 SIZE SHOWN
ADJUST SIZE AS REQUIRED

SPECIFICATIONS/DATA

6" x 8" PC Style (Stackable) Assembly

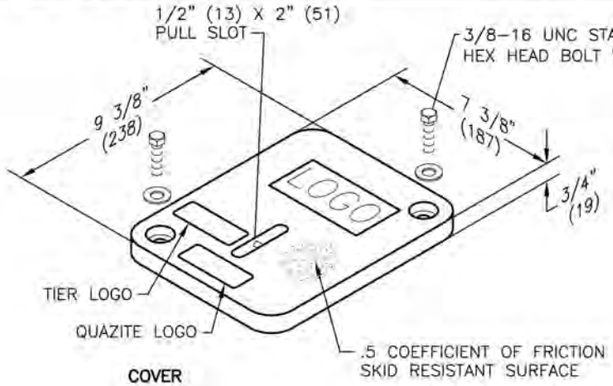

COVER

ADD STACKED ENCLOSURES AS REQUIRED TO MAINTAIN COVER FLUSH WITH THE GROUND AND THE BOTTOM AT BURIAL DEPTH OR SLIGHTLY BELOW.

MAKE SURE THERE IS 12 INCHES OF GRAVEL UNDER THE OPEN END TO PROVIDE DRAINAGE.

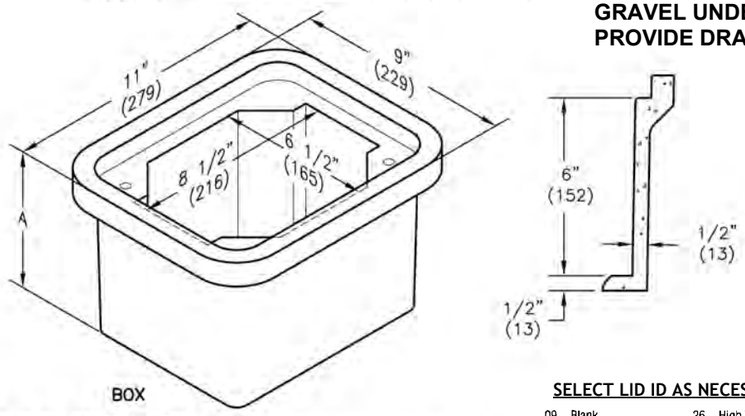

BOX

SELECT LID ID AS NECESSARY

09	Blank	26	High Voltage
10	C.A.T.V.	1Q	Irrigation
12	Communications	29	Lighting
14	Controls	32	Non-potable water
17	Electric	41	Street Lighting
21	Fiber Optics	43	Telephone
23	Gas	44	Traffic
24	Ground	46	Traffic Signal
		50	Water

Covers (Blank unless logo is specified)

DESCRIPTION	PART NO.	WEIGHT #	DESIGN/TEST LOAD #	ANSI TIER*
W/2 Bolts	PC0608HA00	4 (1.8 kg)	15,000 / 22,500	15
Gasketed w/4 Bolts	PC0608HG00	4 (1.8 kg)	15,000 / 22,500	15

* Gasketed covers and bolt grommets must be used with a gasketed box. Gaskets reduce the inflow of fluids but do not make the enclosure water tight.

Boxes (Stackable with self-aligning, replaceable EZ-Nut)

DESCRIPTION	PART NO.	WEIGHT #	DIMENSION A	DESIGN/TEST LOAD #	ANSI TIER*
Open Bottom	PC0608BA06	14 (6.4 kg)	6 3/4" (171 mm)	15,000 / 22,500	15
Open Bottom w/Gasket	PC0608BG06	14 (6.4 kg)	6 3/4" (171 mm)	15,000 / 22,500	15
Solid Bottom	PC0608DA06	15 (6.8 kg)	7 1/4" (184 mm)	15,000 / 22,500	15
Solid Bottom w/Gasket	PC0608DG06	15 (6.8 kg)	7 1/4" (184 mm)	15,000 / 22,500	15

Dimensions & weights in parentheses are metric equivalent.
* Loadings comply with ANSI/SCTE 77 (see page 9).

JANUARY 2011

HUBBELL

IN-THE-GROUND JUNCTION BOX

SEE SPECIFICATION SECTION 5 ON E5.1 FOR PURPOSE OF THESE CATALOG SHEETS AND COMPLIANCE WITH OPEN AND FAIR COMPETITION. IN NO CASE SHALL THE INCLUSION OF THIS CATALOG SHEET BE CONSTRUED TO PREVENT ANY MANUFACTURER FROM PROPOSING AN EQUIVALENT MATERIAL ITEM TO ONE LISTED HERE.

CONSULTING AND DESIGN
FUSSELL ENGINEERING
2435 DIXON STREET MISSOULA, MT 59801
(406) 721-6996 fus@aol.com
MONTANA MICHAEL T. FUSSELL 7982 E REGISTERED PROFESSIONAL ENGINEER

M. FUSSELL FEB 7, 2016					
DRAWN BY: DATE:	REVISED BY: DATE:	APPROVED BY: DATE:	Montana Fish, Wildlife & Parks	WHITEFISH & WAYFARERS CATALOG SHTS	LARSON CIVIL ENGINEERING, LLC 28 ANTLER AVENUE CLANCY, MT 59634 406-443-6111 jeff@larsonce.com
M. FUSSELL FEB 7, 2016				RECREATIONAL BICYCLE CAMPING PROJECT	
CHECKED BY: DATE:	APPROVED BY: DATE:	APPROVED BY: DATE:		WHITEFISH LAKE AND WAYFARERS STATE PARKS	
				FWP #7166601	

SHEET: E 4.0

031016

BASIC ELECTRICAL REQUIREMENTS

1.1 GENERAL
A. The intent of the drawings is to indicate the general extent of work required for the project. The drawings for electrical work are diagrammatic, showing the location, type devices and equipment required. the drawings shall not be scaled for exact measurements. Provide all fixtures, lamps, devices, accessories, offsets and materials necessary to facilitate the system's functioning as indicated by the design and the equipment indicated.

1.2 ELECTRICAL INSTALLATIONS
A. Coordinate electrical equipment and materials installation with other building components.
B. Verify all dimensions by field measurements.
C. Arrange for chases, slots, and openings in other building components to allow for electrical installations.
D. Coordinate the installation of required supporting devices and sleeves to be set in poured-in-place concrete and other structural components, as they are constructed.
E. Sequence, coordinate, and integrate installations of electrical materials and equipment for efficient flow of the Work. Give particular attention to large equipment requiring positioning prior to closing-in the building.
F. Where mounting heights are not detailed or dimensioned, install electrical services and overhead equipment to provide the maximum headroom possible.
G. Coordinate connection of electrical systems with exterior underground and overhead utilities and services. Comply with requirements of governing regulations, franchised service companies, and controlling agencies. Provide connection for each service.

1.3 NAMEPLATE DATA
A. Provide permanent operational data nameplate on each item of power operated equipment, indicating manufacturer, product name, model number, serial number, capacity, operating and power characteristics, labels of tested compliances, and similar essential data.

1.4 DELIVERY, STORAGE, AND HANDLING
A. Deliver products to project properly identified with names, model numbers, types, grades, compliance labels, and similar information needed for distinct identifications; adequately packaged and protected to prevent damage during shipment, storage and handling.
B. Store equipment and materials at the site, Protect stored equipment and materials from damage.

1.5 ENVIRONMENTAL PROTECTION
A. The contractor shall not release any hazardous materials to the environment during the course of this work. If materials are encountered during demolition which are suspected to be hazardous, the contractor shall cease work and inform the Engineer for action by the Owner. If the contractor disturbs hazardous materials without consultation with the Engineer, abatement, mitigation, and restoration of the environment shall be the contractor's responsibility.
B. The contractor shall, in general, take all reasonable precautions and measures during the course of this work to protect and safeguard the natural and human environment. This shall be interpreted as a primary, rather than subordinate, requirement of the project.

1.6 CLEANING
A. Clean all light fixtures, lamps and lenses prior to final acceptance. Replace all inoperative lamps.
B. Clean up all waste or trash from the electrical work.

CODES AND STANDARDS

1.1 CODES AND STANDARDS
A. Comply with these specifications, project drawings, and all applicable local, State, and National laws, codes, standards, and regulations. In the event of differing requirements, the most stringent applies. Applicable portions of the following shall apply:
1. Building, other structures, and all facilities or systems with electrical installations within the scope of the National Electrical Code (NEC) published by the National Fire Protection Association (NFPA 70).
B. INSPECTIONS AND FEES
1. Inspection and approval by the State or local Electrical Inspector will be required prior to acceptance by the Owner.
2. The contractor is responsible for obtaining and paying for all necessary State or local permits and inspections.

1.2 SPECIAL REQUIREMENTS
The following are special requirements which may be more restrictive than the code:
1. Hot wires, neutral and ground wires are the same size unless otherwise indicated.
2. A ground wire must be pulled in all raceways regardless of raceway construction. Raceways shall not be used as the only ground conductor.
3. Switch leads must be the same size as branch circuit conductors. Therefore #14 switch lead is not allowed on a #12 circuit.
4. All connections must be torqued to specifications using a torque wrench.
5. The neutral connection lugs of a duplex outlet shall not be used for connecting the in and out neutral conductors. Generally a pigtail will be required.
6. A ground wire must be installed for each circuit. A common ground wire for several circuits, even if located in the same conduit, is not allowed.
7. All connections to devices such as receptacles and switches shall be made using the device lug screw. Push-in connections shall not be used.

ELECTRICAL SYSTEM

1.1 QUALITY ASSURANCE
A. Installer's Qualifications: Firm with at least 3 years of successful installation experience on projects with electrical work similar to that required for this project.
B. UL Standards:
1. Comply with applicable requirements of U.L. safety standards pertaining to electrical systems. Provide electrical equipment, products, and components which have been UL-listed and labeled.
2. Comply with UL Standard 486A, "Wire Connectors and Soldering lugs for Use With Copper Conductors" including, but not limited to, tightening of electrical connectors to torque values indicated.
3. Comply with applicable requirements of UL Standards Nos.467 and 869 pertaining to electrical grounding and bonding.
4. NEC Compliance: Comply with applicable requirements of NEC (NFPA 70) pertaining to construction and installation of electrical systems.
C. ANSI Compliance: Comply with applicable requirements of ANSI/NEMA and ANSI/EIA standards pertaining to products and installation of electrical electrical systems and equipment.

2.1 METAL CONDUIT AND TUBING
A. General: Provide metal conduit, tubing and fittings of types, grades, sizes and weights (wall thickness) for each service indicated.
1. Where types and grades are not indicated, provide proper selection determined by installer to fulfill wiring requirements, and comply with applicable portions of NEC for raceways.
B. Flexible Metal Conduit: FS EE-C-566 and UL 1. Formed from continuous length of spirally wound, interlocked zinc-coated strip steel.
C. Liquid-Tight Flexible Metal Conduit: Provide liquid-tight flexible metal conduit; construct of single strip, flexible, continuous, interlocked, and double-wrapped steel; galvanized inside and outside; coat with liquid-tight jacket of flexible polyvinyl chloride (PVC).
D. Flexible Metal conduit Fittings: Provide conduit fittings for use with flexible steel conduit of threadless hinged clamp type.
E. Liquid-Tight Flexible Metal Conduit Fittings: FS W-F-406, Type 1, Class 3, Style G.
1. Provide cadmium plated, malleable iron fittings with compression type steel ferrule and neoprene gasket sealing rings, with insulated, or non-insulated throat.
F. Electrical Metallic Tubing (EMT): FS WW-C-563, ANSI C80.3 and UL 797.
G. EMT Fittings: Use Type 1 fittings for rain tight connections. Use Type 2 fittings for concrete tight connections. Use Type 3 fittings for miscellaneous connections.

2.2 NONMETALLIC CONDUIT
A. Electrical Plastic Conduit: Schedule 80, UL-rated, construct of polyvinyl chloride compound C-200 PVC, and UL-listed in accordance with NEC Article 347 for direct burial, or above ground use.
B. PVC Conduit and Tubing Fittings: NEMA TC 3, mate and match to conduit and tubing type material.

2.3 CONDUIT BODIES
A. Provide galvanized cast-metal conduit bodies of types, shapes and sizes as required to fulfill job requirements and NEC requirements.

2.4 CONNECTION MATERIALS AND COMPONENTS
A. General: For each electrical connection indicated, provide complete assembly of materials, including but not necessarily limited to, pressure connectors, terminals (lugs), electrical insulating tape, electrical solder, electrical soldering flux, heat-shrinkable insulating tubing, cable ties, solderless wirenuts, and other items and accessories as needed to complete splices and terminations of types indicated.

2.5 WIRES, CABLES, AND CONNECTORS
A. Wires/Cables: Unless otherwise indicated, provide wires/cables (conductors) for electrical connections which match, including sizes and ratings, of wires/cables which are supplying electrical power. Reduced size ground conductors are not allowed unless expressly permitted on the drawings or in the specification.
1. Provide copper conductors with conductivity of not less than 98 percent at 20ºC (68ºF).
2. Conductors shall be copper THWN, THHN, OR XHHW unless otherwise indicated.

2.6 OUTLET BOXES AND COVERS
A. UL 514, cadmium— or zinc-coated if of ferrous metal.

CONSULTING AND DESIGN
FUSSELL ENGINEERING
2435 DIXON STREET MISSOULA, MT 59801
(406) 721-6996 fus@aol.com
MONTANA MICHAEL T. FUSSELL 7982 E REGISTERED PROFESSIONAL ENGINEER

M. FUSSELL FEB 7, 2016 DRAWN BY: DATE: M. FUSSELL FEB 7, 2016 CHECKED BY: DATE:	REVISED BY: DATE: APPROVED BY: DATE:	APPROVED BY: DATE: APPROVED BY: DATE:	Montana Fish, Wildlife & Parks	WHITEFISH & WAYFARERS ELE. SPECS. RECREATIONAL BICYCLE CAMPING PROJECT WHITEFISH LAKE AND WAYFARERS STATE PARKS FWP #7166601	LARSON CIVIL ENGINEERING, LLC 28 ANTLER AVENUE CLANCY, MT 59634 406-443-6111 jeff@larsonce.com

SHEET: E 5.0

031016

2.7 DEVICE PLATES
A. Provide UL listed, one-piece device plates for outlets and fittings to suit the devices installed.
B. Plates on unfinished walls and on fittings shall be of zinc-coated sheet steel or cast metal having round or beveled edges.
C. Plates installed in wet locations shall be gasketed.

2.8 RECEPTACLES:
A. General: NEMA 5-20R, specification grade, grounding type.
1. Bodies shall be ivory thermosetting plastic supported by a metal mounting strap.
2. Connect grounding pole to the mounting strap.
B. Weatherproof Receptacles: Provide in a cast metal box with a gasketed, weatherproof, cover plate and a gasketed cap over each receptacle opening. Receptacle cover shall provide weather protection even with a plug inserted into the receptacle body as required by recent UL changes.
C. Ground Fault Circuit Interrupter Receptacles: UL 943, and shall be duplex type for mounting in a standard outlet box. The device shall be capable of detecting a current leak of 5 milliamperes. The device shall be NEMA 5-20R.

INSTALLATION

3.1 INSPECTION
A. Examine areas and conditions under which raceways are to be installed, and substrate which will support raceways. Notify the Owner in writing of conditions detrimental to proper completion of the work. Do not proceed with work until unsatisfactory conditions have been corrected in manner acceptable to Installer.

3.2 INSTALLATION
A. General: Install raceways as indicated; in accordance with manufacturer's written installation instructions, and in compliance with NEC, and NECA's "Standards of Installation."
1. Install units plumb and level, and maintain manufacturer's recommended clearances.
B. Coordinate with other work including wires/cables, boxes, and panel work, as necessary to interface installation of electrical raceways and components with other work.
C. Wiring Methods: shall be as indicated on the drawings, except where specifically indicated or specified otherwise, or required by NFPA 70 to be installed otherwise.

3.3 INSTALLATION OF CONDUITS
A. General: Installed concealed conduits in new construction work.
1. Mechanically fasten together metal conduits, enclosures, and raceways for conductors to form continuous electrical conductor. Connect to electrical boxes, fittings and cabinets to provide electrical continuity and firm mechanical assembly.
B. Conduit Installation: Follow minimum requirements in other areas as follows:
1. Cut conduits straight, properly ream, and cut threads for heavy wall conduit deep and clean.
2. Field-bend conduit with benders designed for purpose so as not to distort nor vary internal diameter.
3. Size conduits to meet NEC, except no conduit smaller than 3/4 inch shall penetrate concrete or masonry.
4. Fasten conduit terminations in sheet metal enclosures by 2 locknuts, and terminate with bushing. Install locknuts inside and outside enclosure.
C. Non-Metallic Conduit: Make solvent cemented joints in accordance with recommendation of manufacturer.

3.4 INSTALLATION OF ELECTRICAL CONNECTIONS
A. Coordinate with other work, including wires/cables, raceway and equipment installation, as necessary to properly interface installation of electrical connections for equipment with other work.
B. Connect electrical power supply conductors to equipment conductors in accordance with equipment manufacturer's written instructions and wiring diagrams.
1. Mate and match conductors of electrical connections for proper interface between electrical power supplies and installed equipment.
C. Cover splices with electrical insulating material equivalent to, or of greater insulation resistivity rating, than electrical insulation rating of those conductors being spliced.
D. Prepare cables and wires, by cutting and stripping covering armor, jacket, and insulation properly to ensure uniform and neat appearance where cables and wires are terminated.
E. Tighten connectors and terminals, including screws and bolts, in accordance with equipment manufacturers published torque tightening values for equipment connectors.
1. Accomplish tightening by utilizing proper torquing tools, including torque screwdriver, beam-type torque wrench, and ratchet wrench with adjustable torque settings.
2. Where manufacturer's torquing requirements are not available, tighten connectors and terminals to comply with torquing values contained in UL's Standard 486A.

3.5 BOXES, OUTLETS, AND SUPPORTS
A. Provide boxes in the wiring or raceway systems wherever required for pulling of wires, making connections, and mounting of devices or fixtures.
1. Each box shall have the volume required by NFPA 70 for the number of conductors enclosed in the box.

3.6 SPLICES
A. Make splices in accessible locations. Make splices in conductors No. 10 AWG and smaller with an insulated pressure type connector. Make splices in conductors No. 8 AWG and larger with a solderless connector and cover with an insulation material equivalent to the conductor insulation.

3.7 INSTALLATION OF ELECTRICAL GROUNDING
A. General: Install electrical grounding systems where shown, in accordance with applicable portions of NEC, with NECA's "Standard of Installation," and in accordance with recognized industry practices to ensure that products comply with requirements and serve intended functions. Grounding includes but is not limited to:

GROUND ALL EQUIPMENT
GROUND TO GROUND ROD
GROUND TO BUILDING STRUCTURE
GROUND TO WATER PIPES
GROUND TO OTHER UTILITIES

B. Ground all exposed non-current-carrying metallic parts of electrical equipment, metallic raceway systems, grounding conductor in nonmetallic raceways, grounding conductor of nonmetallic sheathed cables, and neutral conductor of wiring systems.

3.8 GROUNDING CONDUCTOR
A. Provide an insulated, green-colored equipment ground consisting of the same size and type conductor as the circuit hot conductor for all feeder and branch circuits.
B. This conductor shall be separate from the electrical system neutral conductor.
C. Run a separate ground wire for each circuit even if several circuits share the same conduit. In no case shall the ground conductor be used in common for several circuits.

3.9 TESTS
A. Carry out all normal testing and operational checks to assure a complete, safe, and reliable system
B. Devices Subject to Manual Operation: Each device subject to manual operation shall be operated at least five times, demonstrating satisfactory operation each time.
C. Circuit all branch circuits as shown, connect to phase and circuit number indicated. Circuit changes shall have prior approval of the Owner.
D. Correct any discrepancies found as a result of the above tests including replacement of conductors, splices, re-connecting loads, changing phases, installing additional ground rods, etc.

SUBMITTALS

4.1 General contractor is responsible to coordinate project requirements involving more than one trade, is responsible to coordinate between trades and equipment suppliers, is responsible for performance of subcontractors to verify that equipment delivered to the project site for installation is in compliance with project plans and specifications, and must verify that such equipment will properly interface with equipment specified by other trades for installation and use on the project.

4.2 For the purpose of meeting those responsibilities, General contractor
A. shall review all submittals from sub contractors;
B. shall verify compliance of those submittals with project plans and specifications; and
C. shall verify coordination of equipment identified in those submittals with equipment and/or work of other trades before forwarding submittals to project engineer for review. Evidence of the General contractor's review and verification of the above requirements will be provided with submittals forwarded for review.

CATALOG SHEET NOTES

5.1 GENERAL
Catalog sheets are included in this drawing set which show major material items required for the project.

Specific manufacturers have been identified, but equivalent material items are welcome, even for specialized applications.

5.2 APPROVALS
If material items other than those indicated are to be provided, prior approval from the Contracting Officer/Contract Administrator/Engineer is required. Requests for prior approval shall be made at least 10 days before bid opening.

Prior approval shall not be required for material items which a consensus of manufacturers would agree to be of equivalent quality and performance.

5.3 SUBSTITUTIONS
Material items that cannot have substitutions or equivalents will be so marked.

5.4 SUMMARY
Catalog sheets have been included so that the bidder can have a better understanding of the material item requirements.

LARSON CIVIL ENGINEERING, LLC
28 ANTLER AVENUE
CLANCY, MT 59634
406-443-6111
jeff@larsonce.com