Montana Fish Wildlife & Parks

Freezout Lake WMA
Flume Replacement

Near Fairfield, MT

FWP #7135313

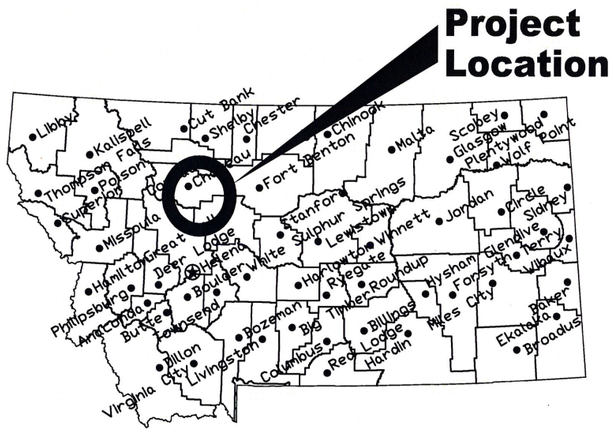

Location Map

No Scale

North

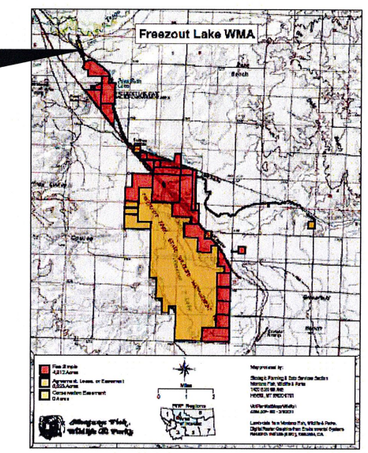

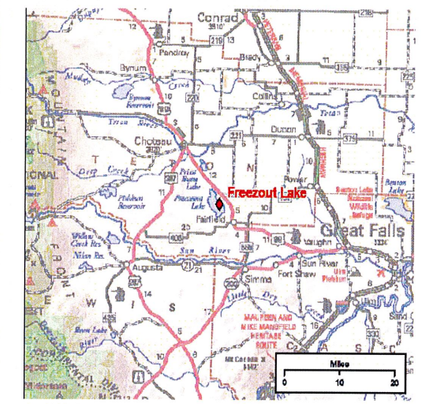

Vicinity Map

No Scale

MONTANA FISH, WILDLIFE AND PARKS
DESIGN AND CONSTRUCTION SECTION

MAILING ADDRESS:
PO BOX 200701
HELENA, MT 59620-0701

PHYSICAL ADDRESS:
1522 9th AVENUE
HELENA, MT 59601

TEL 406.841.4000
FAX 406.841.4004
fwp.mt.gov/Doing Business/Design&Construction

DRAWING INDEX

1 COVER SHEET
2 OVERALL SITE PLAN
3 FLUME DEMOLITION PLAN/PROFILE
4 FLUME DEMOLITION ELEVATIONS
5 NEW FLUME PLAN/PROFILE
6 NEW FLUME ELEVATIONS/DETAILS

MONTANA
MARK C. McNEARNEY
LICENSED
PROFESSIONAL ENGINEER
7-29-15

P. Valle July 2015			
DRAWN BY: DATE:	APPROVED BY: DATE:	APPROVED BY: DATE:	Montana Fish, Wildlife & Parks
M. McNearney July, 2015			
CHECKED BY: DATE:	APPROVED BY: DATE:	APPROVED BY: DATE:	

Cover Sheet
Freezout Lake WMA (near Fairfield, MT)

SHEET: 1 of 6

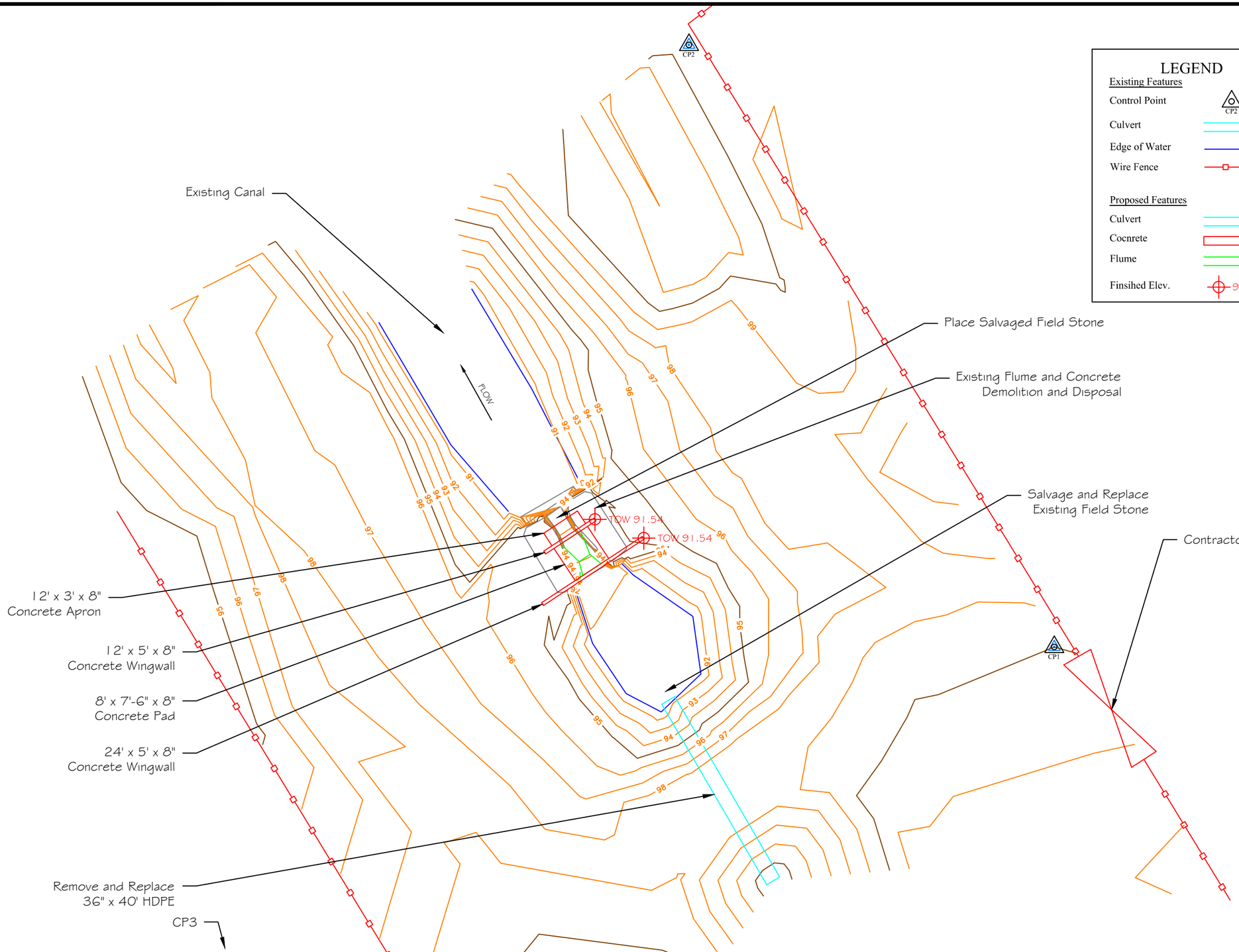

LEGEND

Existing Features

- Control Point (CP2)
- Culvert
- Edge of Water
- Wire Fence

Proposed Features

- Culvert
- Cocnrete
- Flume
- Finsihed Elev. (995.17)

Scale: 0 10' 20'

CONTROL POINTS

Description	Northing	Easting	Elevation
CP1	10,000.00	5,000.00	100.00
CP2	10,119.95	4,927.22	99.23
CP3	9,915.05	4,885.61	100.77

NOTES:

1. Owner will establish initial survey control and alignment grade stakes, see Technical Specification 01050, Field Engineering for additional Contractor surveying requirements.

2. Salvage all existing field stone encountered during excavation construction. Replace all existing field stone at culvert outlet, or as directed by the Engineer.

3. Any utilities depicted on these plans are in accordance with their achieved "Quality Levels" as defined in the American Society of Civil Engineer's document ASCE 38, "Standard for the Collection and Depiction of Existing Subsurface Utility Data."

M. McNearney July, 2015			
DRAWN BY: DATE:	REVISED BY: DATE:	APPROVED BY: DATE:	
? ?			
CHECKED BY: DATE:	APPROVED BY: DATE:	APPROVED BY: DATE:	

Montana Fish, Wildlife & Parks

Overall Site Plan

Freezeout WMA (near Fairfield, MT)

SHEET: 2 of 6

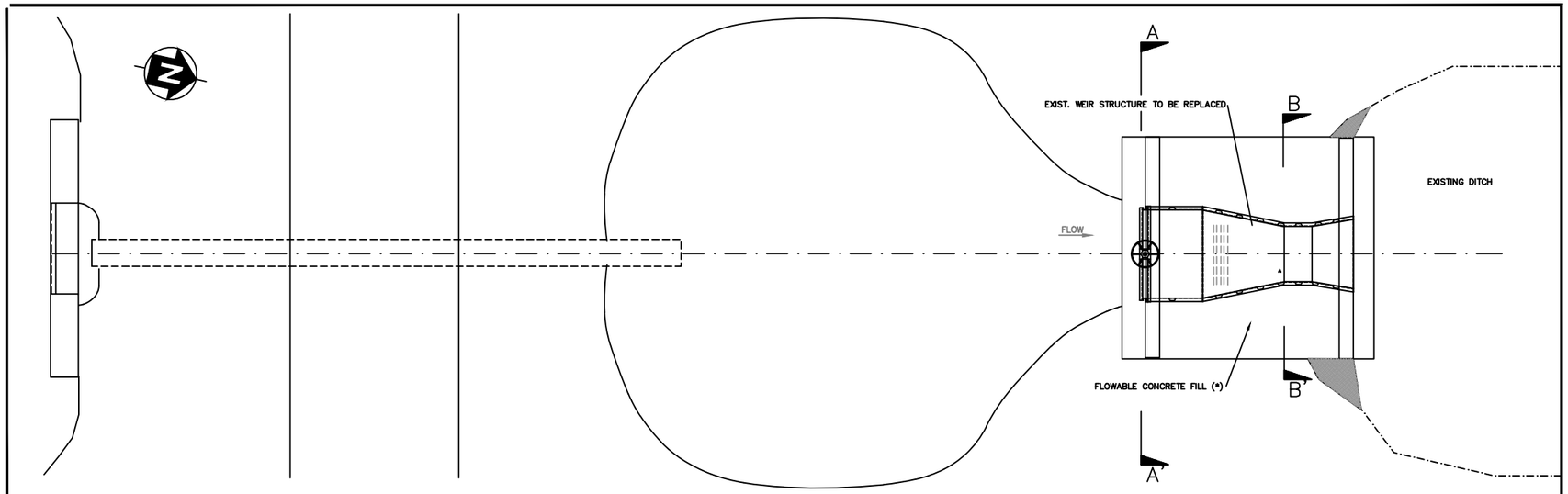

PLAN VIEW

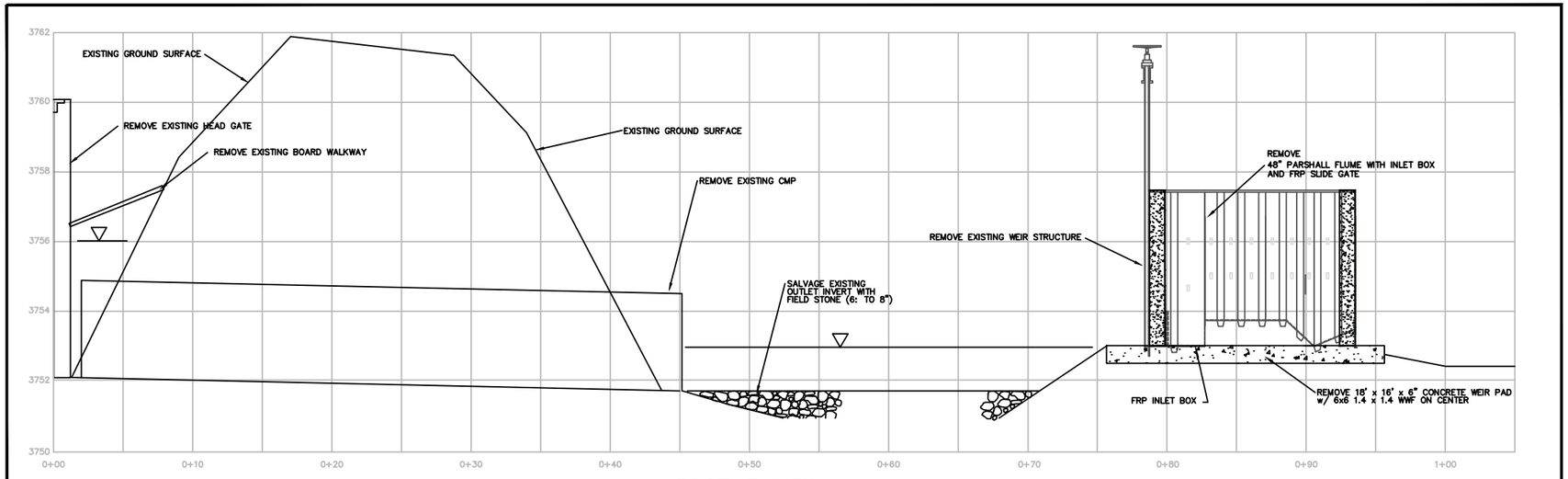

PROFILE VIEW

P. Valle	July, 2015						
DRAWN BY:	DATE:	REVISED BY:	DATE:	APPROVED BY:	DATE:	Montana Fish, Wildlife & Parks	Flume Demolition Plan/Profile Freezout Lake WMA (near Fairfield, MT)
CHECKED BY:	DATE:	APPROVED BY:	DATE:	APPROVED BY:	DATE:		

SHEET: 3 of 6

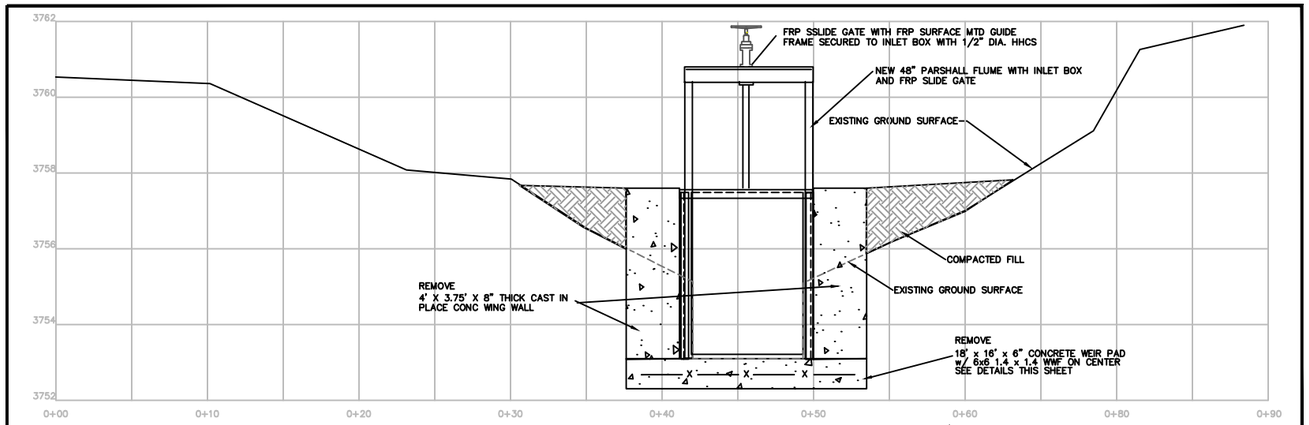

PROFILE THRU WEIR – SECTION A–A'

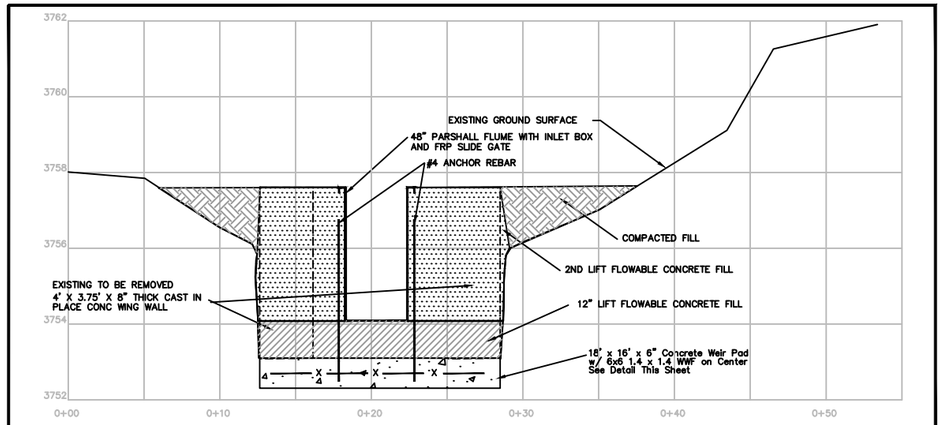

PROFILE THRU WEIR – SECTION B–B'

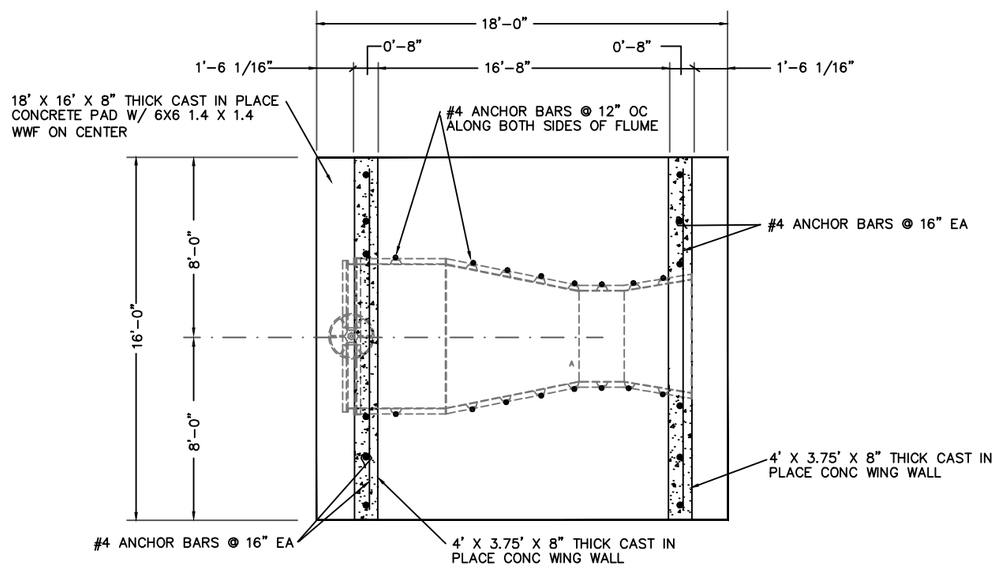

PLAN VIEW

NOT TO SCALE

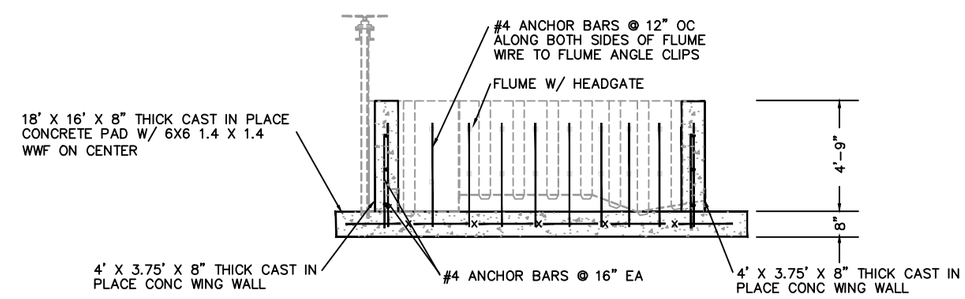

ELEVATION VIEW

FLUME STRUCTURE

NOT TO SCALE

P. Valle July, 2015			
DRAWN BY: DATE:	REVISED BY: DATE:	APPROVED BY: DATE:	
CHECKED BY: DATE:	APPROVED BY: DATE:	APPROVED BY: DATE:	

Montana Fish, Wildlife & Parks

Flume Demolition Elevations
Freezout Lake WMA (near Fairfield, MT)

SHEET: 4 of 6

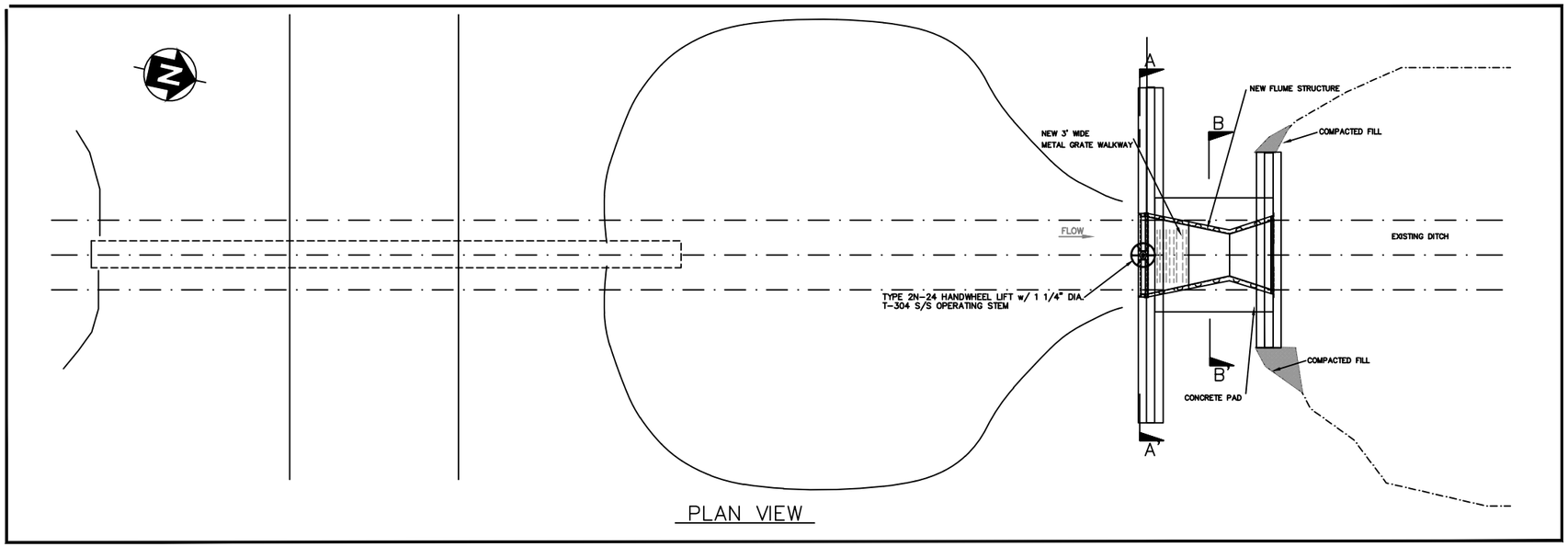

PLAN VIEW

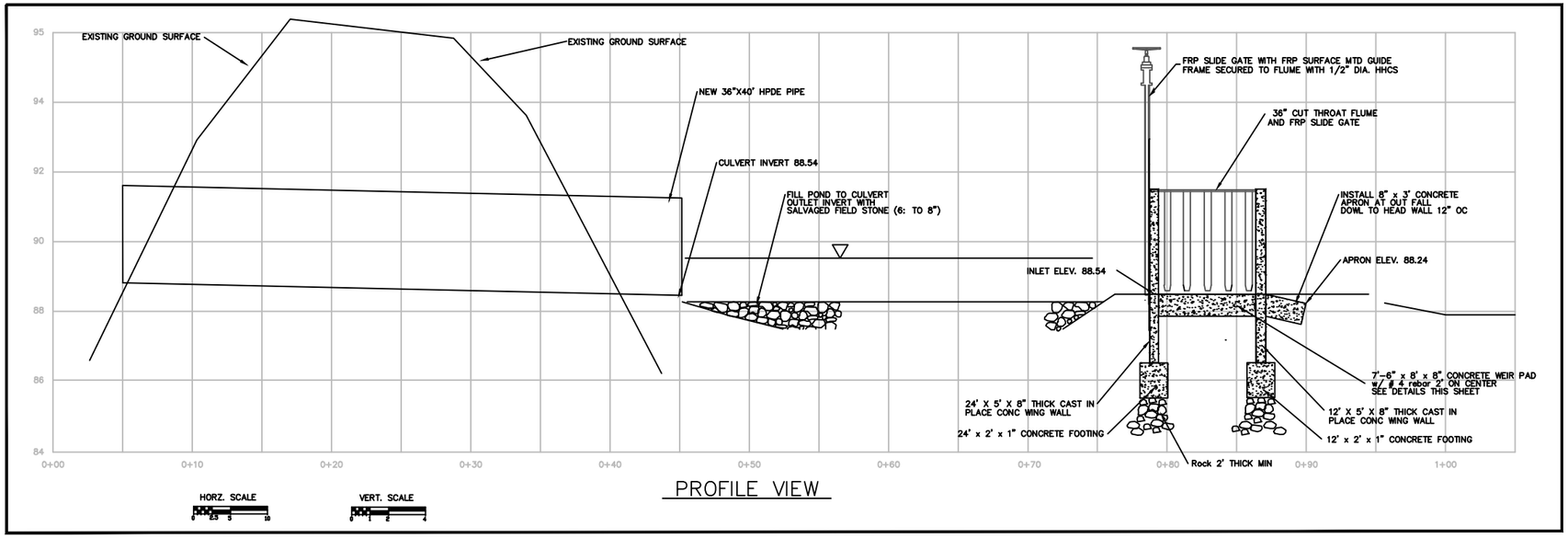

PROFILE VIEW

NOTES:

1. WATER SURFACE ELEVATIONS (W.S.) WILL VARY FROM THAT INDICATED.
2. RESTORE TRENCH SURFACE TO MATCH EXISTNG ELEVATIONS UNLESS OTHERWISE INDICATED.
3. PROVIDE GALVANIZED WELDED BAR GRATING GW SERIES BY McNICHOLS WITH 2"X3/16" BEARING BARS 1 3/16 ON CENTER AND REGULAR CROSS BARS 4" ON CENTER.

P. Valle	July, 2015					Montana Fish, Wildlife & Parks	SHEET: 5 of 6
DRAWN BY:	DATE:	REVISED BY:	DATE:	APPROVED BY:	DATE:	New Flume Plan/Profile	
CHECKED BY:	DATE:	APPROVED BY:	DATE:	APPROVED BY:	DATE:	Freezout Lake WMA (near Fairfield, MT)	

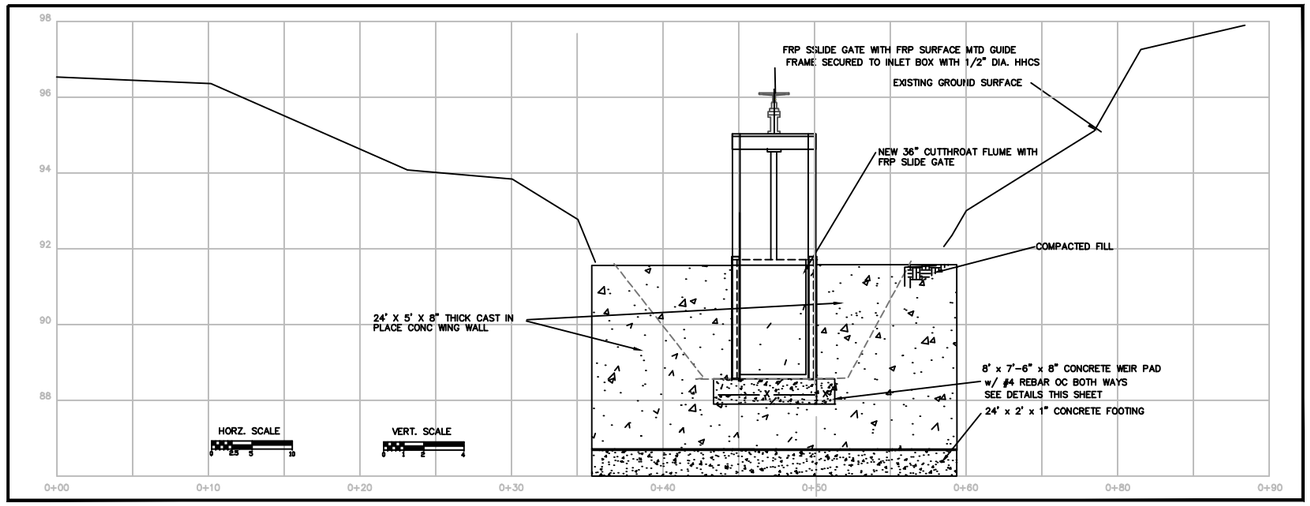

PROFILE THRU WEIR – SECTION A–A'

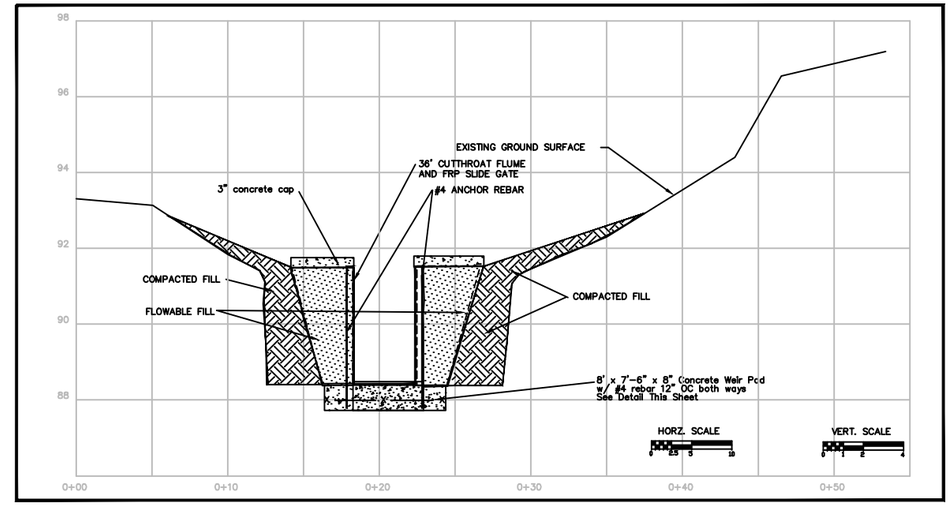

PROFILE THRU WEIR – SECTION B–B'

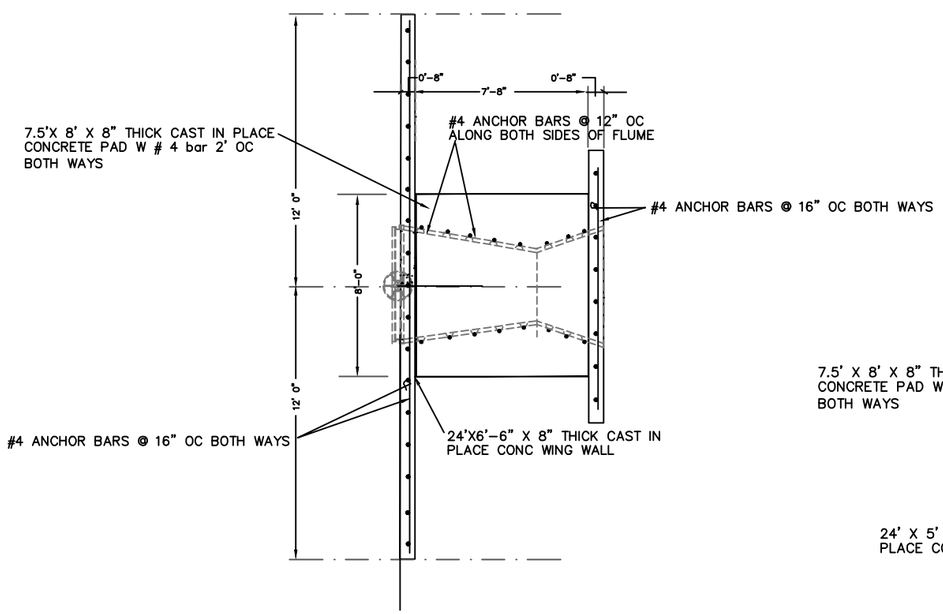

PLAN VIEW

FLUME STRUCTURE

NOT TO SCALE

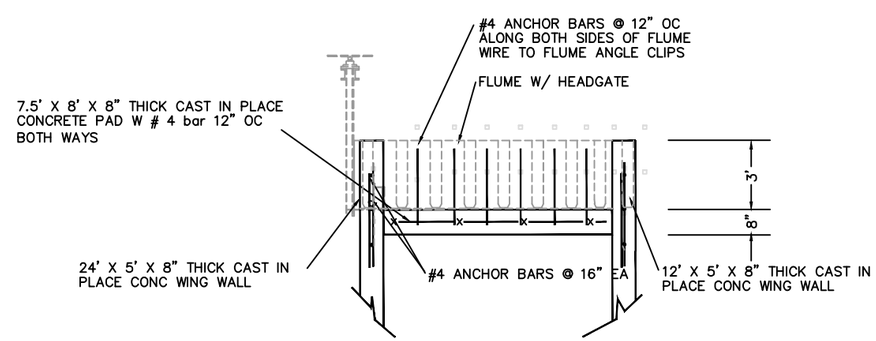

ELEVATION VIEW

FLUME STRUCTURE

NOT TO SCALE

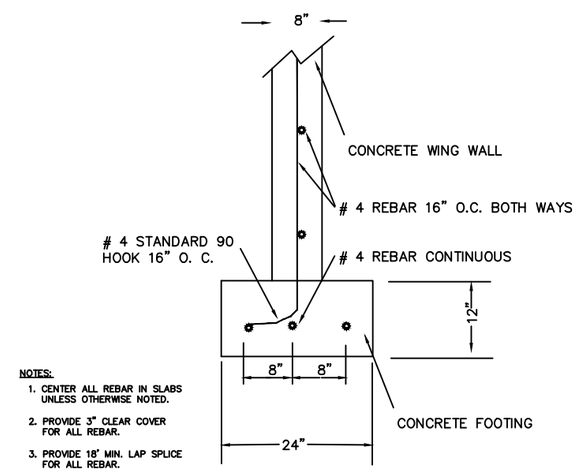

NOTES:

1. CENTER ALL REBAR IN SLABS UNLESS OTHERWISE NOTED.
2. PROVIDE 3" CLEAR COVER FOR ALL REBAR.
3. PROVIDE 18' MIN. LAP SPLICE FOR ALL REBAR.

ELEVATION VIEW

FOOTING DETAIL

NOT TO SCALE

P. Valle	July, 2015					Montana Fish, Wildlife & Parks	New Flume Elevations/Details Freezout Lake WMA (near Fairfield, MT)
DRAWN BY:	DATE:	REVISED BY:	DATE:	APPROVED BY:	DATE:		SHEET: 6 of 6
CHECKED BY:	DATE:	APPROVED BY:	DATE:	APPROVED BY:	DATE:		