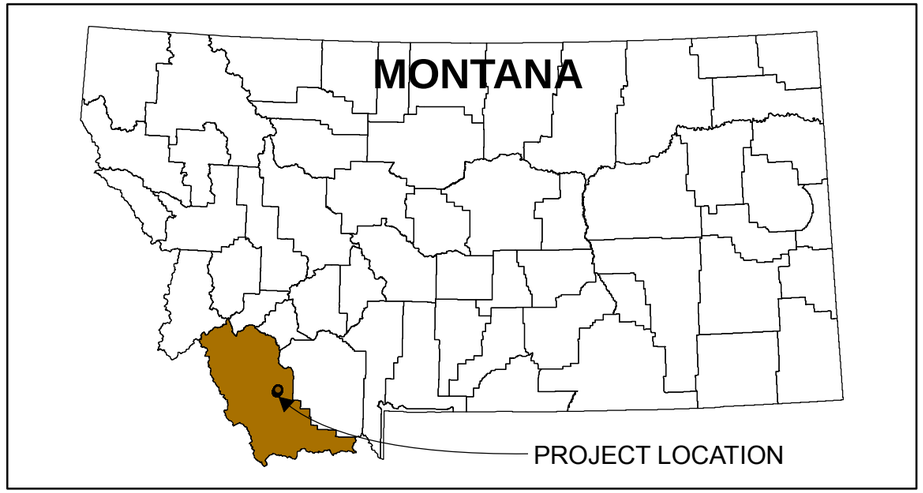

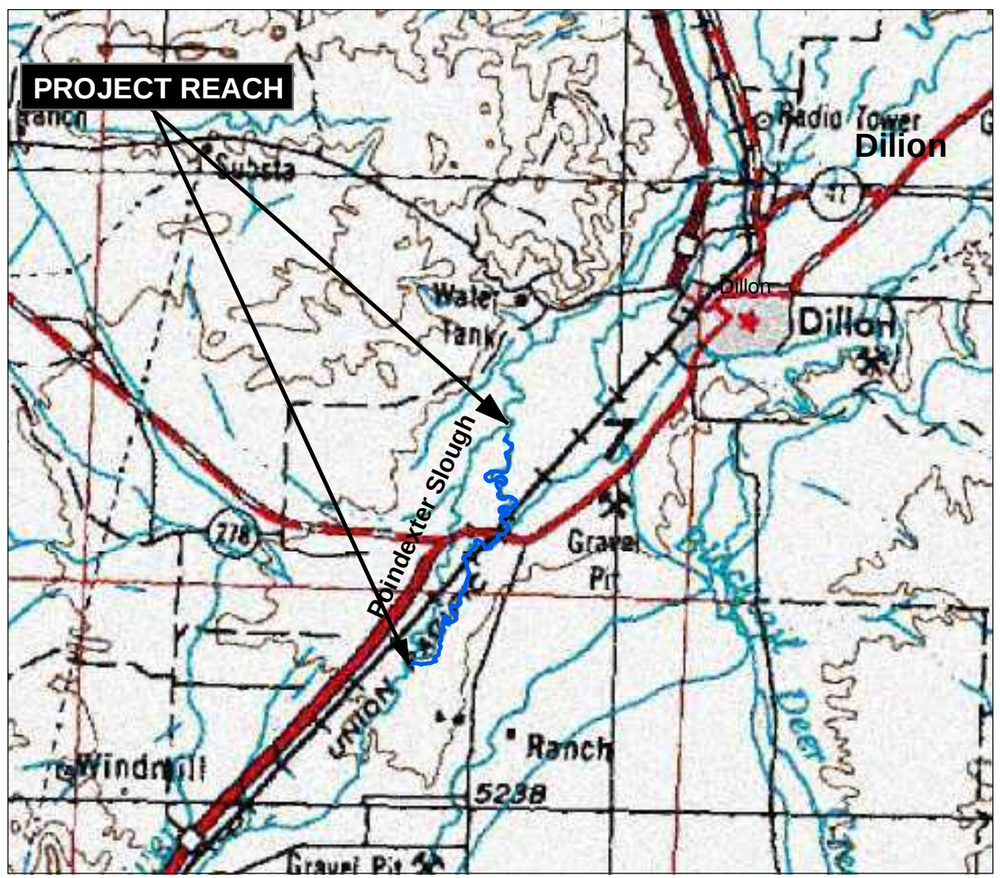

PROJECT VICINITY MAP

Poindexter Slough

Fish Habitat Improvement Project
Beaverhead County, Montana

Design Plans

PREPARED FOR:

BEAVERHEAD WATERSHED COMMITTEE

PREPARED BY:

CONFLUENCE CONSULTING, INC.

P.O. BOX 1133
BOZEMAN, MT 59771
(406) 585-9500

SHEET INDEX

SHEET #	SHEET DESCRIPTION
1	COVER SHEET
2	PROJECT SITE MAP
3	PLAN VIEW (0+00 - 43+00)
4	PLAN VIEW (43+00 - 90+00)
5	PLAN VIEW (90+00 - 126+00)
6	PLAN VIEW (126+00 - 188+00)
7	PLAN VIEW (188+00 - 251+04)
8	CHANNEL BED PROFILE (0 - 125+00)
9	CHANNEL BED PROFILE (125+00 - 251+04)
10	DESIGN CROSS SECTIONS
11	DESIGN CROSS SECTIONS
12	DESIGN POOL / GLIDE PLAN AND CROSS SECTION
13	TYPICAL CHANNEL NARROWING METHOD - PLAN VIEW
14	SITE PLAN - POINDEXTER SLOUGH HEADGATE AT BEAVERHEAD
15	STRUCTURE DETAILS - POINDEXTER SLOUGH HEADGATE
16	STRUCTURE DETAILS - POINDEXTER SLOUGH HEADGATE
17	STRUCTURE DETAILS - POINDEXTER SLOUGH HEADGATE
18	SITE PLAN - DILLON CANAL HEADGATE AT POINDEXTER SLOUGH
19	STRUCTURE DETAILS - DILLON CANAL HEADGATE
20	STRUCTURE DETAILS - DILLON CANAL HEADGATE
21	STRUCTURE DETAILS - DILLON CANAL HEADGATE
22	SWPPP AND ACCESS AND STAGING PLAN

DATE: 05/24/13

COVER SHEET

SHEET: 1

Table 1: Quantities and Areas of Impact Table

Phase	Reach	Station Begin (f)	Station End (f)	Length (f)	No. Pools	Avg Pool Volume Excavated (yd^3)	Total Pool Volume Excavated (yd^3)	Channel Regrading Excavated (yd^3)	Channel Regrading Fill (yd^3)	Volume of Fill Constructed Point Bars\Constructed Bank (yds^3)	Net Channel Material Quantities (+=Surplus, - = Deficit)	Volume of Sod Mats\Topsoil (yds^3)	Area of Impact (Channel Regrading Fill) (acres)	Area of Impact (Point Bars-Constructed Bank) (acres)*	Area of Sod Mats (acres)*	Transplant Willows (# Willows)
1	Reach 1	38	1,500	1,462	13	26	339	4,344		339	4,344	700		0.103	0.434	121
	Reach 2a	1,500	8,000	6,500	47	63	2,944	278		2,944	278	931		1.246	0.577	36
2	Reach 2b	8,000	12,000	4,000	30	63	1,879	0		1,879	0	1,046		0.313	0.648	9
	Reach 3	12,000	13,973	1,973	14	57	797	0	1,834	1,787	-2,823	955	0.905		0.673	13
3	Reach 4A	13,973	19,490	5,517	29	65	1,894	0		2,341	-447	1,226		1.267	0.760	24
	Reach 4B	19,490	25,104	5,614	46	43	1,985	1,873		2,384	1,474	1,247		1.289	0.773	0
				25,066	179		9,837	6,495		11,672	2,826	6,106	0.905	4.217	3.866	203

* Sod Mats are placed on point bars, thus impact area for sod mat is redundant

DRAWN BY: T. T.
DESIGNED BY: T. T., J.L., M.S.
CHECKED BY: M. S., J.L.
FILE NAME: PlanSheet.dwg
DATE: 5/24/13
CCI JOB NO. BCD.003

REV.	DATE	DESCRIPTION	BY	APP'D

CONFLUENCE consulting incorporated

POINDEXTER SLOUGH FISH HABITAT IMPROVEMENT PROJECT BEAVERHEAD COUNTY, MONTANA

PROJECT SITE MAP

SHEET: 2

DRAWN BY: T. T.
DESIGNED BY: T. T., J.L., M.S.
CHECKED BY: M. S., J.L.
DATE: 05/24/13
CCI JOB NO. BCD.003
FILE NAME: Poindexter Slough Fish Design
REV. | DATE | DESCRIPTION | BY | APP'D

CONFLUENCE consulting incorporated

POINDEXTER SLOUGH
FISH HABITAT IMPROVEMENT PROJECT
BEAVERHEAD COUNTY, MONTANA

PLAN VIEW
STATION
0+00 - 43+00

SHEET: 3

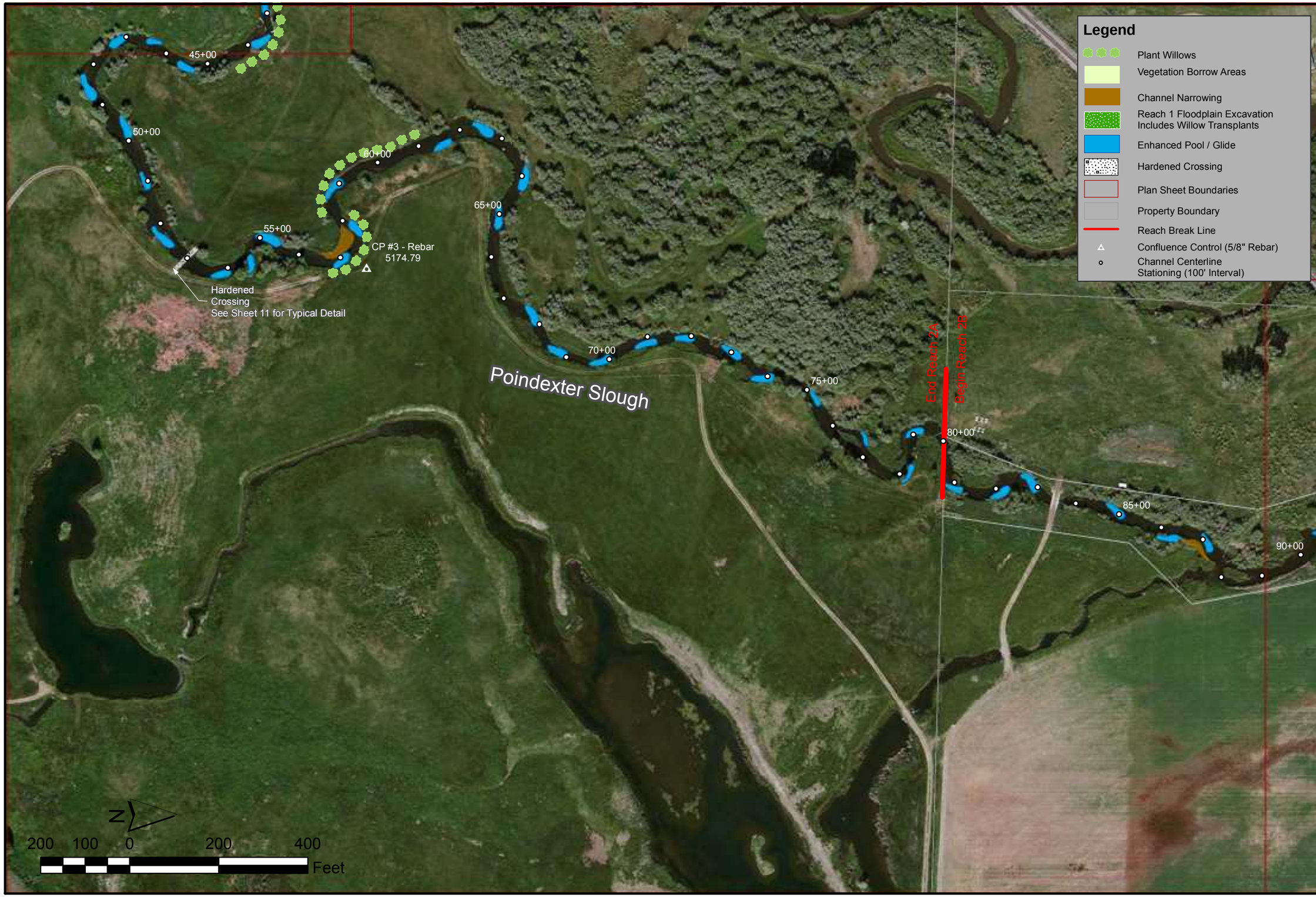

DRAWN BY: T. T.
DESIGNED BY: T. T., J.L., M.S.
CHECKED BY: M. S., J.L.
DATE: 05/24/13
CCI JOB NO. BCD.003
FILE NAME: Poindexter/Maps/FinalDesign
Plan/Sheets/Sheet3.7

REV.	DATE	DESCRIPTION	BY	APP'D

CONFLUENCE consulting incorporated

POINDEXTER SLOUGH
FISH HABITAT IMPROVEMENT PROJECT
BEAVERHEAD COUNTY, MONTANA

PLAN VIEW
STATION
43+00 - 90+00

SHEET: 4

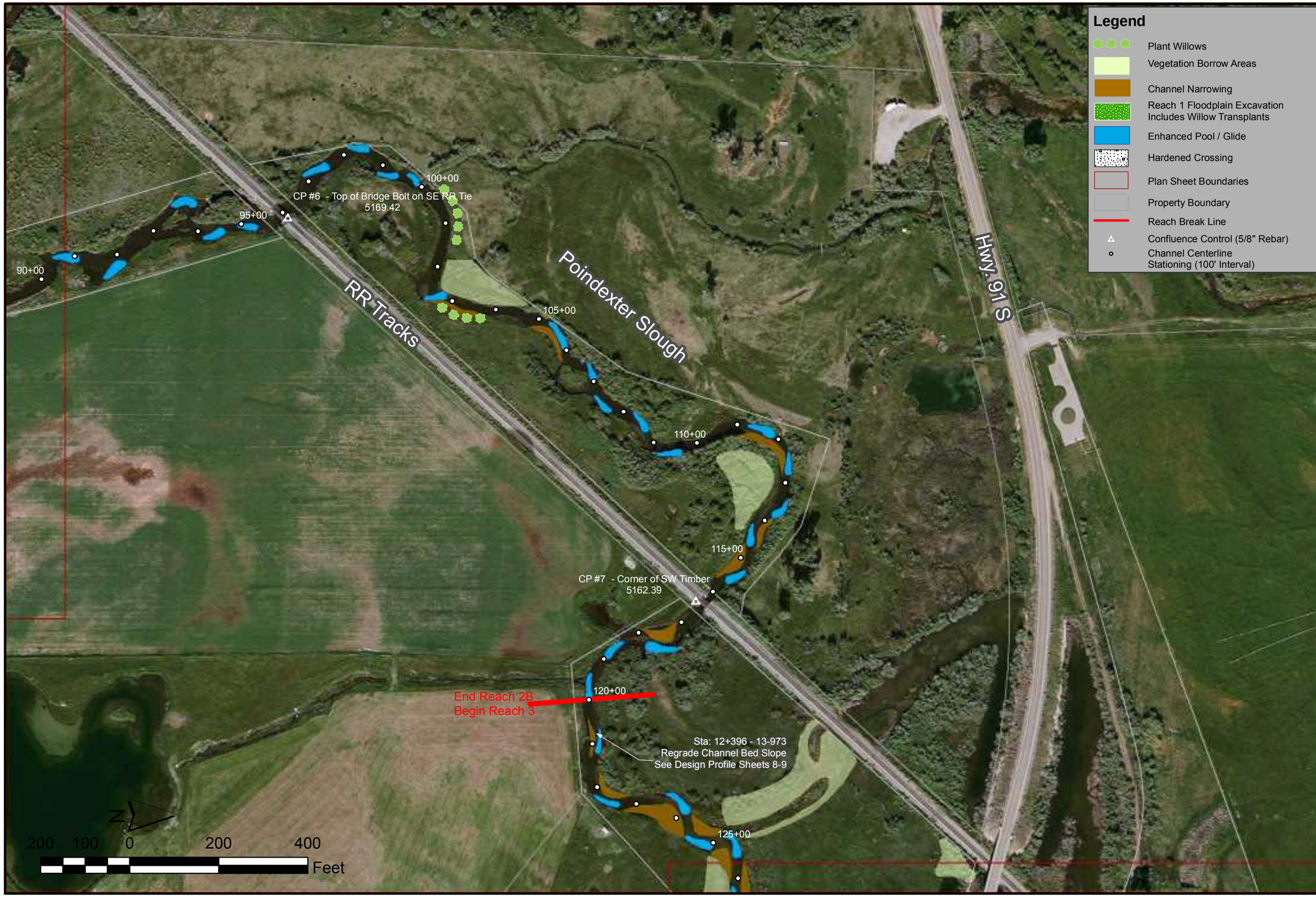

DRAWN BY: T. T.
DESIGNED BY: T. T., J.L., M.S.
CHECKED BY: M. S., J.L.
DATE: 05/24/13
CCI JOB NO. BCD.003
FILE NAME: Poindexter/Maps/PlanDesign
Plan/Sheets/Sheet3.7

REV.	DATE	DESCRIPTION	BY	APP'D

CONFLUENCE consulting incorporated

POINDEXTER SLOUGH
FISH HABITAT IMPROVEMENT PROJECT
BEAVERHEAD COUNTY, MONTANA

PLAN VIEW
STATION
90+00 - 126+00

SHEET: 5

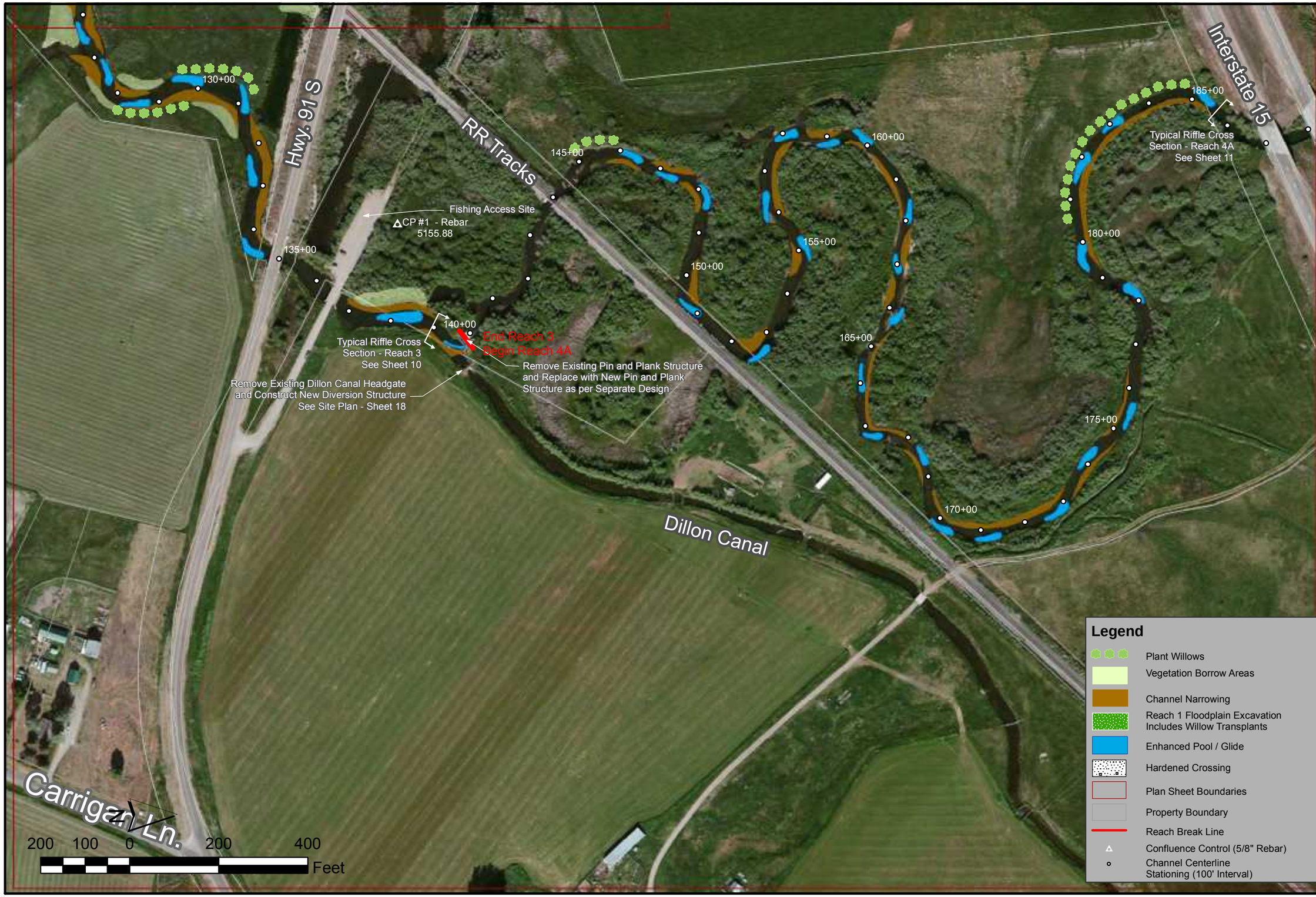

DRAWN BY: T. T.
DESIGNED BY: T. T., J.L., M.S.
CHECKED BY: M. S., J.L.
DATE: 05/24/13
CCI JOB NO. BCD.003
FILE NAME: P:\Projects\Mapping\FinalDesign\Plan\Sheets\Sheet5.7

REV.	DATE	DESCRIPTION	BY	APP'D

CONFLUENCE consulting incorporated

POINDEXTER SLOUGH
FISH HABITAT IMPROVEMENT PROJECT
BEAVERHEAD COUNTY, MONTANA

PLAN VIEW
STATION
126+00 - 188+00

SHEET: 6

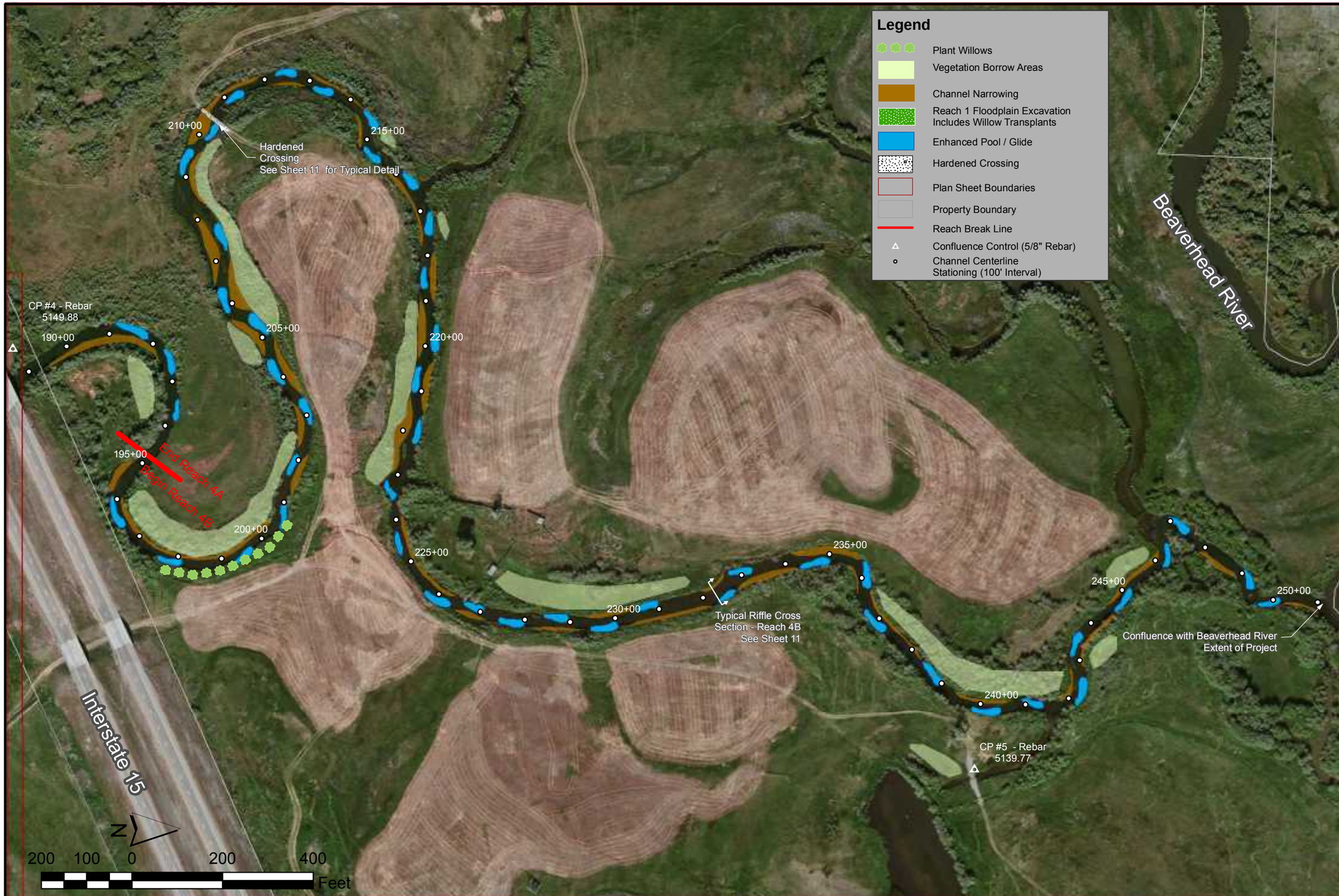

DRAWN BY: T. T.
DESIGNED BY: T. T., J.L., M.S.
CHECKED BY: M. S., J.L.
DATE: 05/24/13
CCI JOB NO. BCD.003
FILE NAME: [illegible]

REV.	DATE	DESCRIPTION	BY	APP'D

CONFLUENCE consulting incorporated

POINDEXTER SLOUGH FISH HABITAT IMPROVEMENT PROJECT BEAVERHEAD COUNTY, MONTANA

PLAN VIEW STATION 188+00 - 251+04

SHEET: 7

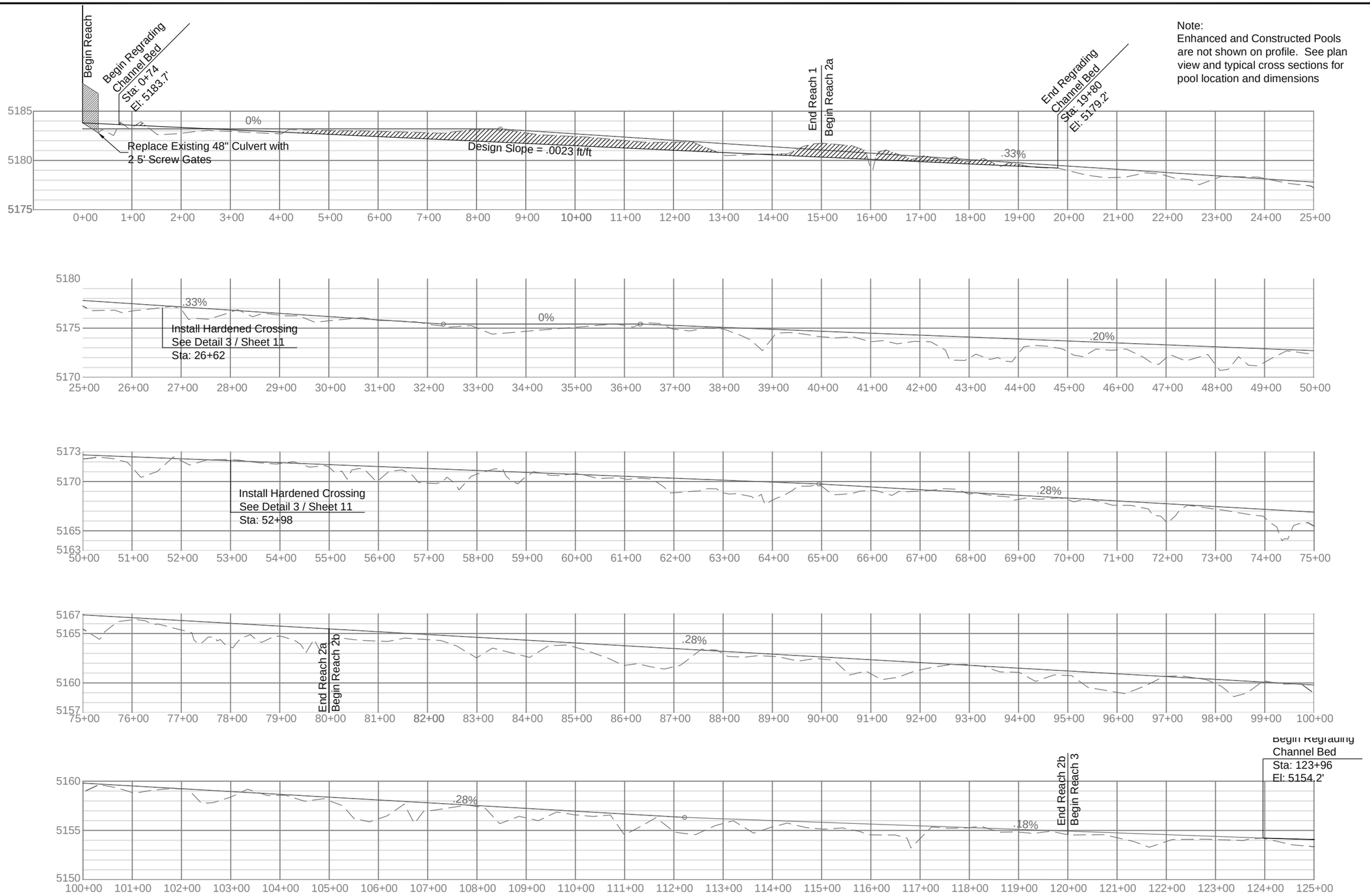

Note:
Enhanced and Constructed Pools are not shown on profile. See plan view and typical cross sections for pool location and dimensions

Design Channel Bed Profile (0+00- 125+00)

HORIZONTAL SCALE: 1" = 200'
VERTICAL SCALE: 1"= 10'

DRAWN BY: T.T.
DESIGNED BY: T.T., J.L., M.S.
CHECKED BY: M.S., J.L.
DATE: 05/24/13
CCJ JOB NO. BCD.003
FILE NAME: H:\BCD\003\DESIGN\DRAWINGS\POINDEXTER\FINAL\DESIGN.DWG

REV.	DATE	DESCRIPTION	BY	APP'D

CONFLUENCE consulting incorporated

POINDEXTER SLOUGH
FISH HABITAT IMPROVEMENT PROJECT
BEAVERHEAD COUNTY, MONTANA

DESIGN CHANNEL BED PROFILE (0+00 - 125+00)

SHEET: 8

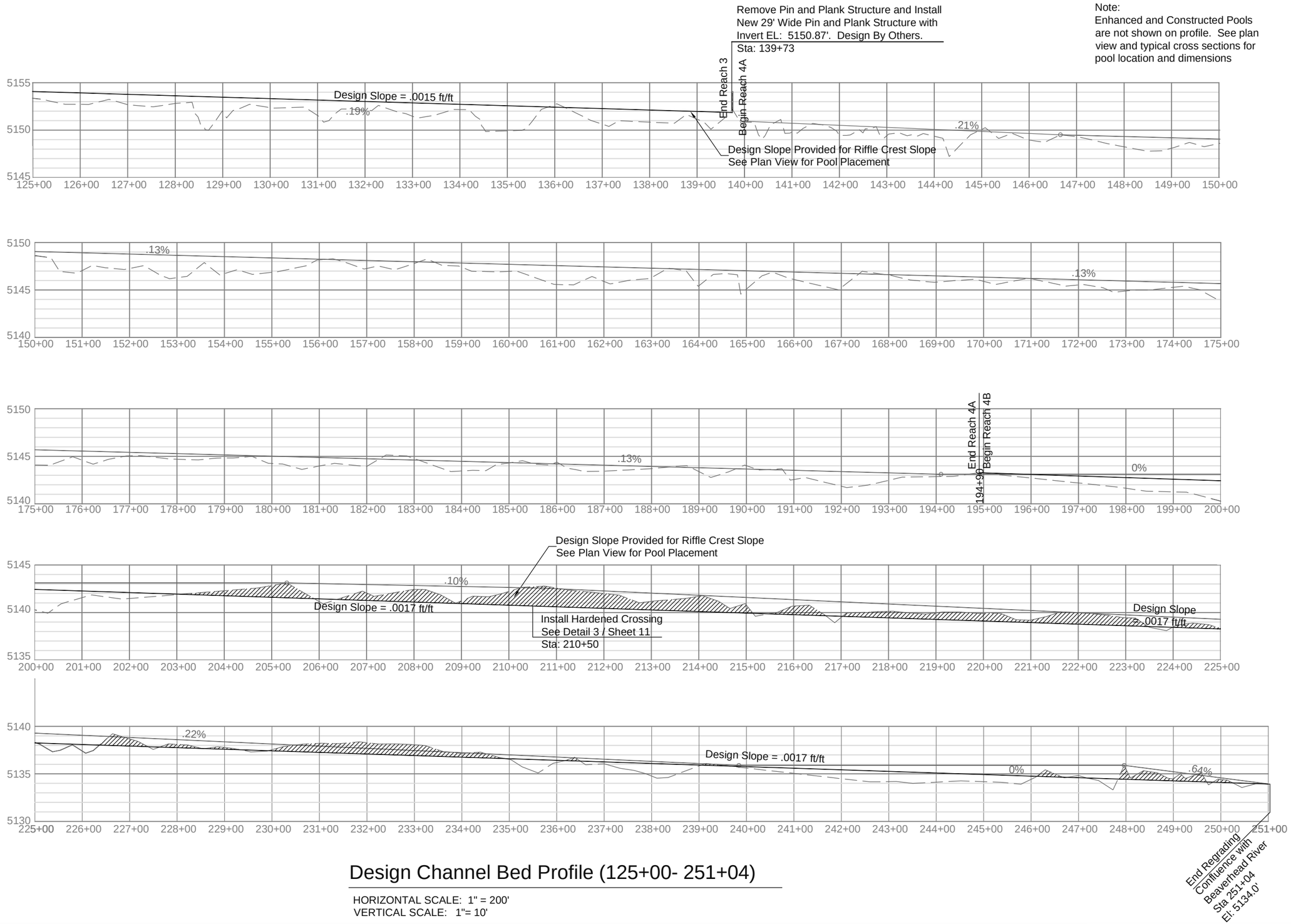

Design Channel Bed Profile (125+00- 251+04)

HORIZONTAL SCALE: 1" = 200'
VERTICAL SCALE: 1"= 10'

DRAWN BY: T.T.
DESIGNED BY: T.T., J.L., M.S.
CHECKED BY: M.S., J.L.
DATE: 05/24/13
CCI JOB NO. BCD.003
FILE NAME: H:\BCD.003\DESIGN\DRAWINGS\POINDEXTER\FINAL\DESIGN.DWG

REV.	DATE	DESCRIPTION	BY	APP'D

CONFLUENCE consulting incorporated

POINDEXTER SLOUGH
FISH HABITAT IMPROVEMENT PROJECT
BEAVERHEAD COUNTY, MONTANA

DESIGN CHANNEL BED PROFILE (125+00 - 251+04)

SHEET: 9

WATER SURFACE ELEVATIONS WITH GIVEN DISCHARGE AT POINDEXTER HEADGATE

FLUSHING FLOW (Q = 200 CFS)
BASE FLOW (Q = 50 CFS)
WINTER FLOW (Q = 20 CFS)

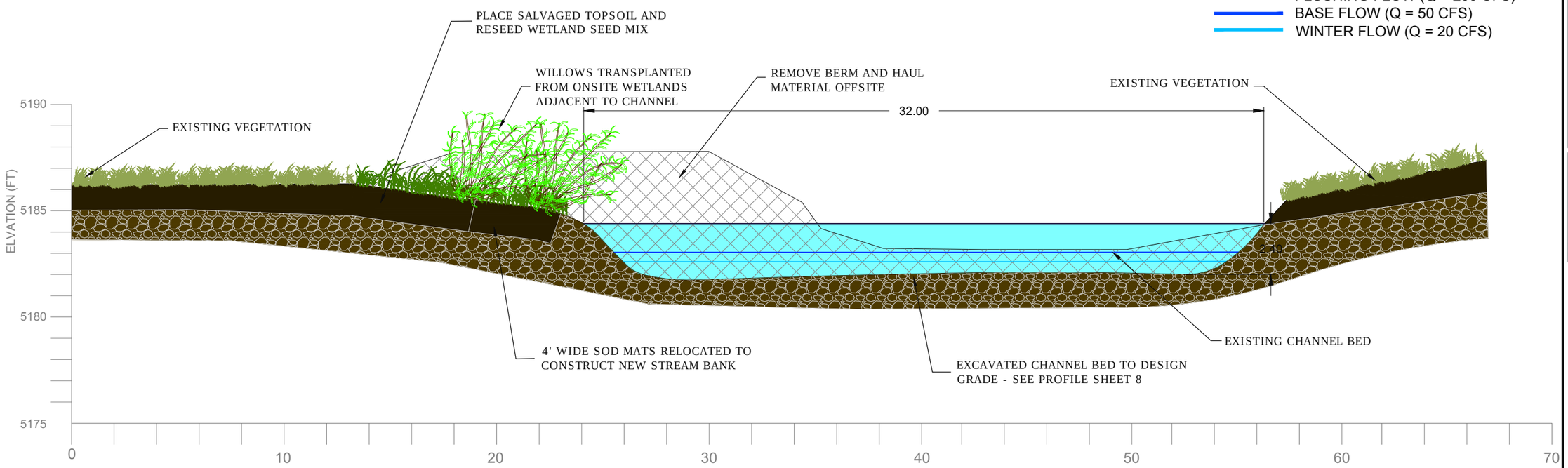

1/10 REACH 1 - TYPICAL DESIGN RIFFLE CROSS SECTION
SCALE - 1":5'

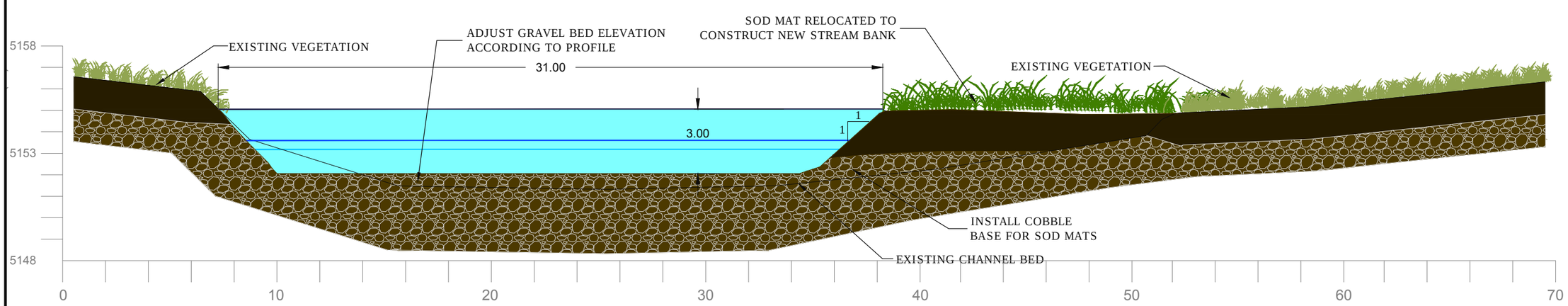

2/10 REACH 3 - TYPICAL DESIGN RIFFLE CROSS SECTION
SCALE - 1":5'

DRAWN BY: T.T.
DESIGNED BY: T.T., J.L., M.S.
CHECKED BY: M.S., J.L.
DATE: 02/24/13
C-1 FOR NO. BCD.003
FILE NAME: M:\BCD\BCD.003\CAD\BCD.003 POINDEXTER FINAL DESIGN.DWG

REV.	DATE	DESCRIPTION	BY	APPD

CONFLUENCE consulting Incorporated

POINDEXTER SLOUGH
FISH HABITAT IMPROVEMENT
BEAVERHEAD COUNTY, MONTANA

DESIGN RIFFLE CROSS SECTIONS

SHEET: 10

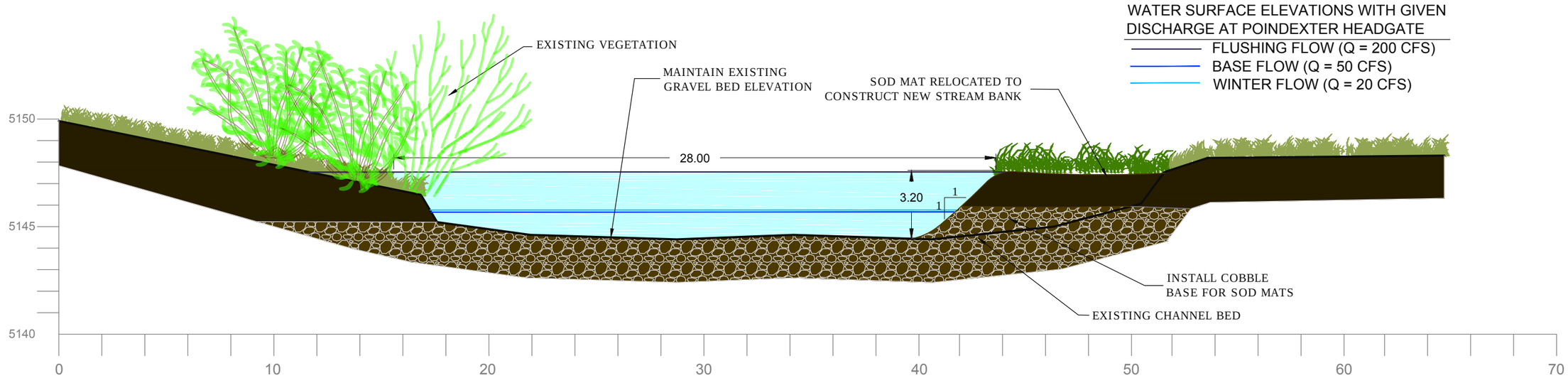

1/11 REACH 4A - TYPICAL DESIGN RIFFLE CROSS SECTION

SCALE - 1":5'

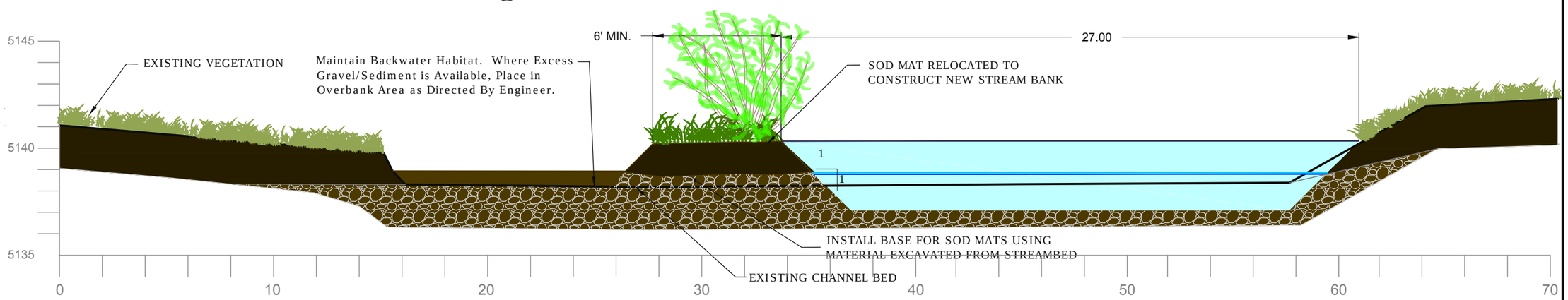

2/11 REACH 4B - TYPICAL DESIGN RIFFLE CROSS SECTION

SCALE - 1":5'

Table 1: Quantities and Areas of Impact Table for Hardened Crossings

Phase	Reach	Station	Crossing Length (ft)	Crossing Width (ft)	Qty of 1"-2" Smooth Rock (yd^3)	Qty of 4"-6" Smooth Rock (yd^3)	Qty of Propex Geotextile Filter Fabric (ft^2)	Area of Impact (ft^2)
2	Reach 2a	26+62	90	24	20	100	2,160	2,160
	Reach 2a	52+98	79	24	18	88	1,896	1,896
3	Reach 4b	210+50	78	24	17	87	1,872	1,872
					55	274	5,928	5,928

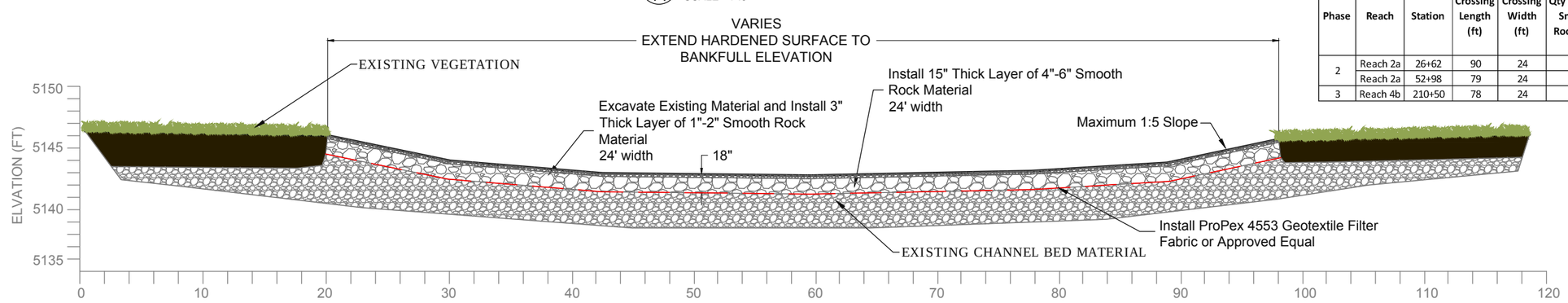

3/11 TYPICAL HARDENED CROSSING CROSS SECTION

NOT TO SCALE

DATE: 05/24/12
C-1 FOR NO. BCD.003
NORTHWEST DIVISION
BONNEVERTERINA DESIGN.DWG

FILE NAME:

DRAWN BY: T.T.
DESIGNED BY: T.T., J.L., M.S.
CHECKED BY: M.S., J.L.

REV.	DATE	DESCRIPTION	BY	APPD

CONFLUENCE consulting Incorporated

POINDEXTER SLOUGH
FISH HABITAT IMPROVEMENT
BEAVERHEAD COUNTY, MONTANA

DESIGN RIFFLE CROSS SECTIONS

SHEET: 11

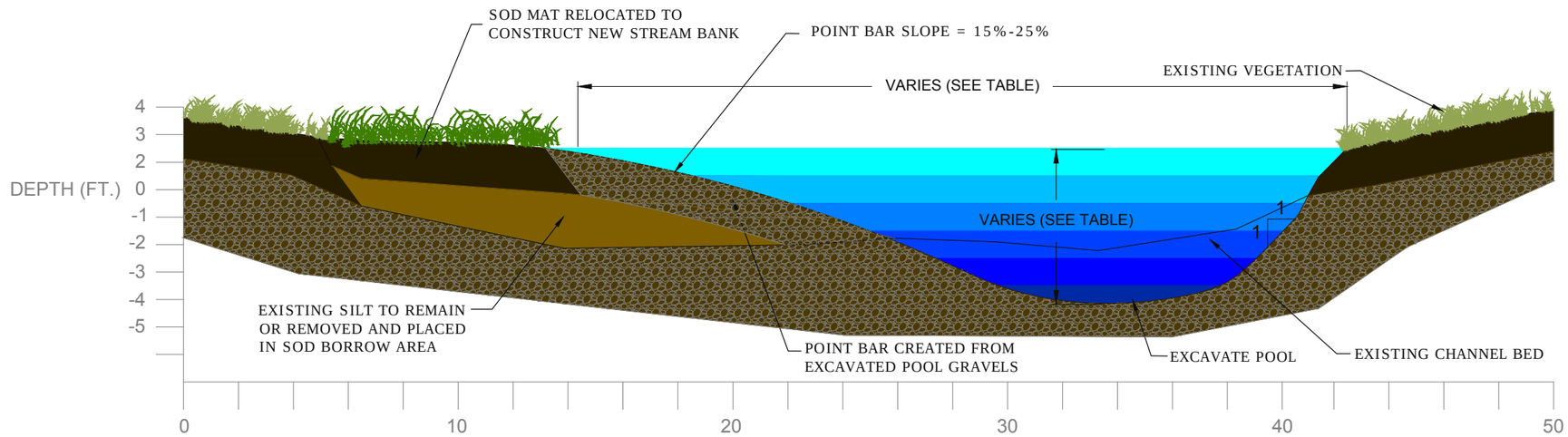

1/12 POINDEXTER SLOUGH POOL / GLIDE DETAIL - CROSS SECTION VIEW
HORIZONTAL SCALE - 1":5'

POOL DIMENSIONS

REACH	AVG. TOP WIDTH (FT.)	MAX DEPTH (FT.)	LENGTH OF POOL/GLIDE COMPLEX (FT.)
1	26'	6.0	67
2	33'	4.9	89
3	25'	7.5	124
4A	23'	8.0	116
4B	22'	7.0	100

* POOL DIMENSIONS PROVIDED AS GUIDANCE. DIMENSIONS MAY VARY ± 10%

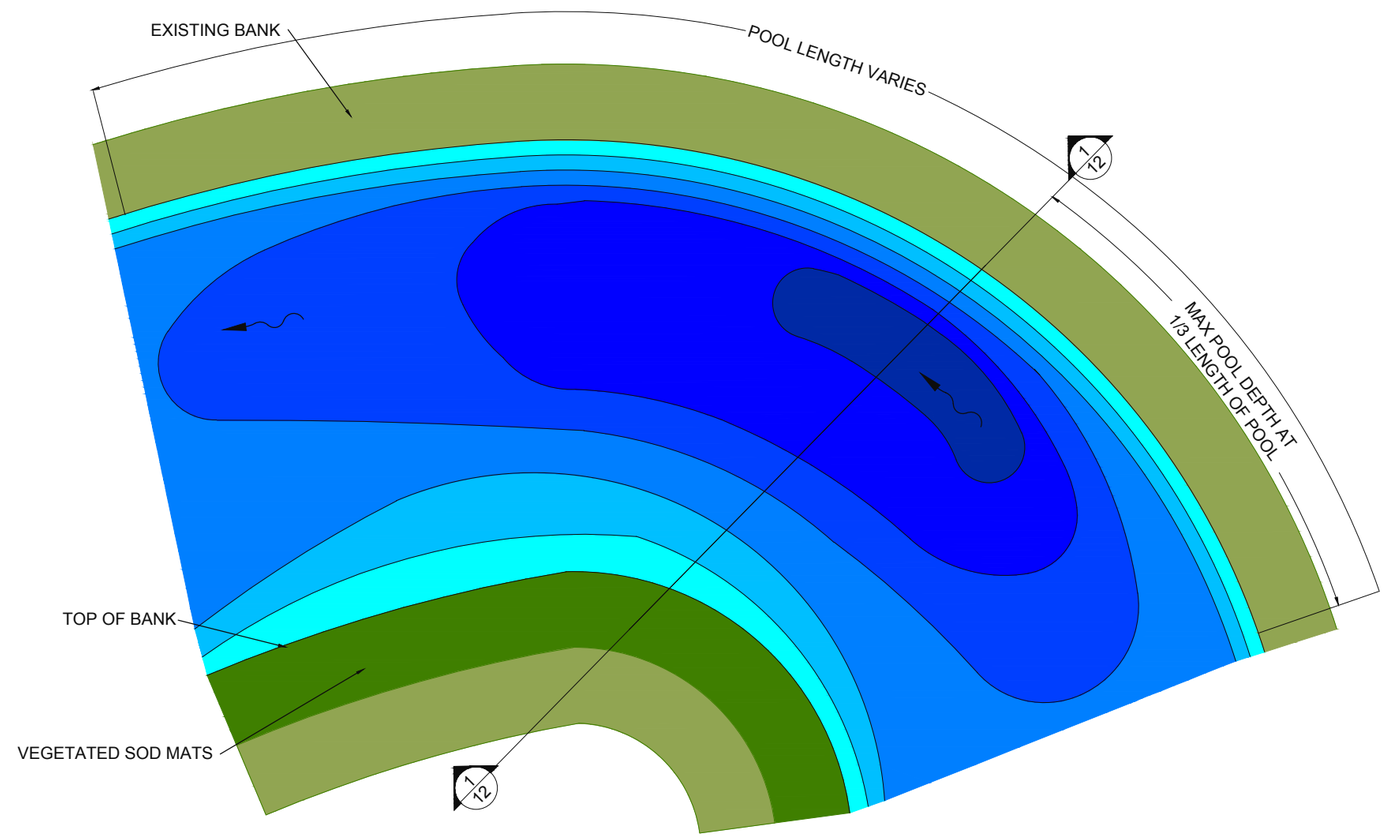

2/12 POINDEXTER SLOUGH POOL/GLIDE DETAIL - PLAN VIEW
HORIZONTAL SCALE - 1":10'

DRAWN BY: T.T.
DESIGNED BY: T.T., J.L., M.S.
CHECKED BY: M.S., J.L.
DATE: 05/24/13
C61 FOR NO. BCD 003
FILE NAME: M:\BCD\BCD003\DESIGN\DESIGN\POINDEXTERINALDESIGN.DWG

REV.	DATE	DESCRIPTION	BY	APPD

CONFLUENCE consulting incorporated

POINDEXTER SLOUGH
FISH HABITAT IMPROVEMENT PROJECT
BEAVERHEAD COUNTY, MONTANA

DESIGN POOL / GLIDE PLAN AND CROSS SECTION

SHEET: 12

PLAN VIEW 1: TYPICAL EXISTING CONDITIONS

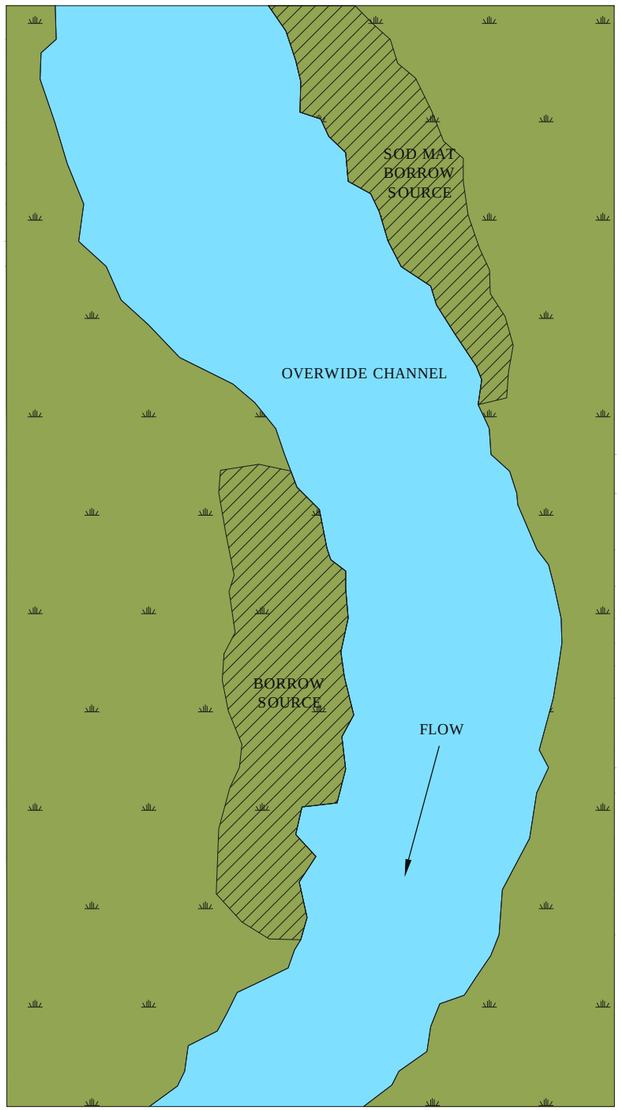

PLAN VIEW 2: TYPICAL RESTORATION CONCEPTS

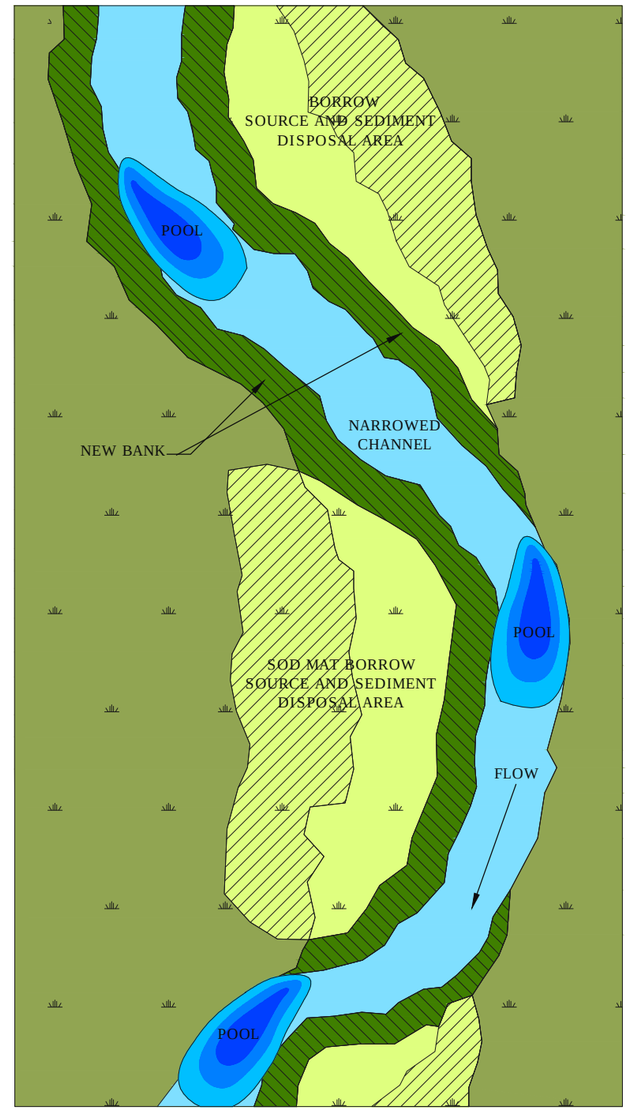

1/13 TYPICAL CHANNEL NARROWING METHOD (REACHES 2,3,4) - PLAN VIEW

NOT TO SCALE

DRAWN BY: T.T.
DESIGNED BY: T.T., J.L., M.S.
CHECKED BY: M.S., J.L.
DATE: 05/24/13
CCI JOB NO. BCD.003
FILE NAME: H:\BCD.003\DRAWINGS\POINDEXTER\DRAFT\DESIGN.DWG

REV.	DATE	DESCRIPTION	BY	APP'D

CONFLUENCE consulting incorporated

POINDEXTER SLOUGH
FISH HABITAT IMPROVEMENT PROJECT
BEAVERHEAD COUNTY, MONTANA

TYPICAL CHANNEL NARROWING METHOD - PLAN VIEW

SHEET: 13

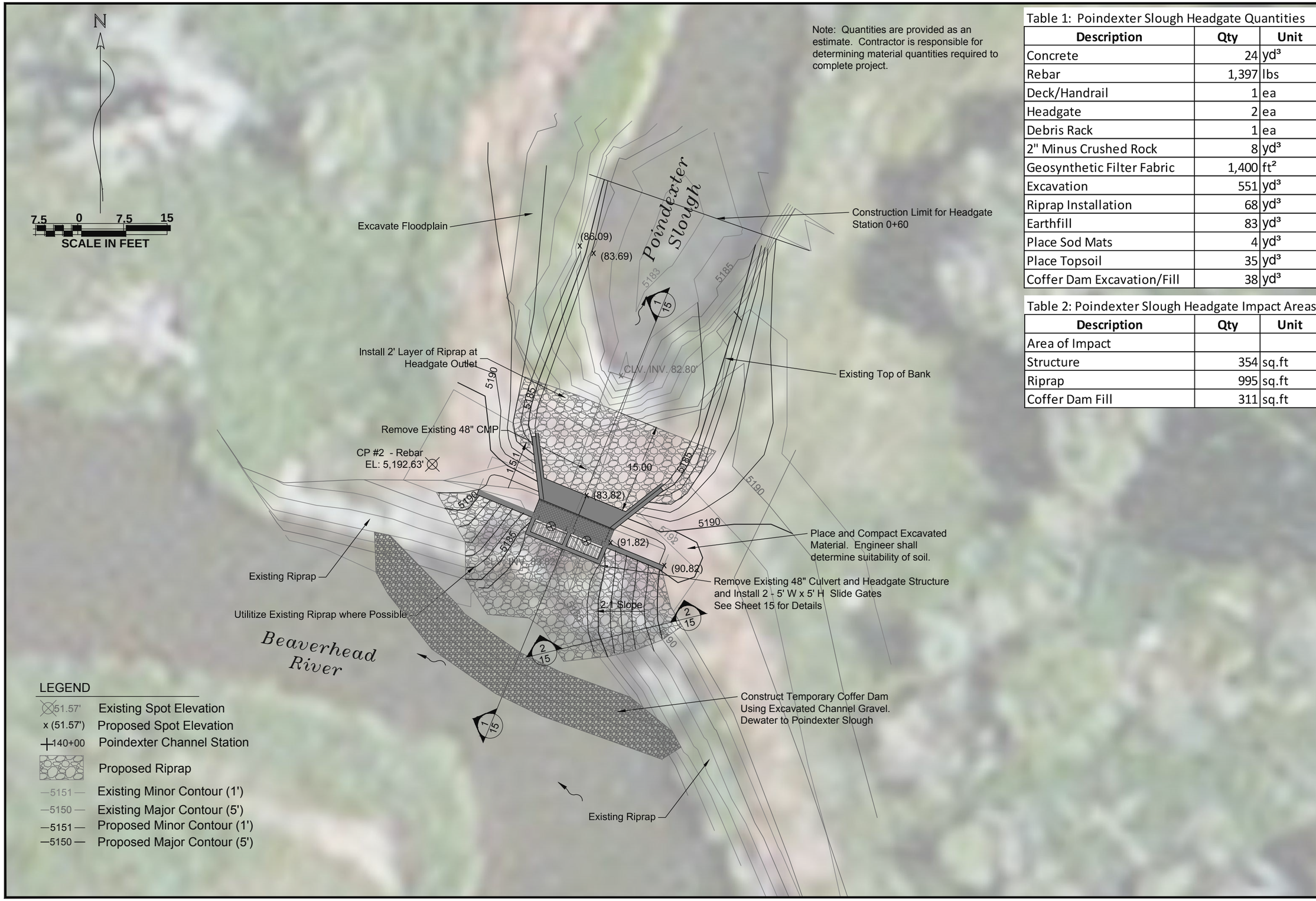

Note: Quantities are provided as an estimate. Contractor is responsible for determining material quantities required to complete project.

Table 1: Poindexter Slough Headgate Quantities

Description	Qty	Unit
Concrete	24	yd^3
Rebar	1,397	lbs
Deck/Handrail	1	ea
Headgate	2	ea
Debris Rack	1	ea
2" Minus Crushed Rock	8	yd^3
Geosynthetic Filter Fabric	1,400	ft^2
Excavation	551	yd^3
Riprap Installation	68	yd^3
Earthfill	83	yd^3
Place Sod Mats	4	yd^3
Place Topsoil	35	yd^3
Coffer Dam Excavation/Fill	38	yd^3

Table 2: Poindexter Slough Headgate Impact Areas

Description	Qty	Unit
Area of Impact		
Structure	354	sq.ft
Riprap	995	sq.ft
Coffer Dam Fill	311	sq.ft

DRAWN BY: T.T.
DESIGNED BY: T.T., J.L., M.S.
CHECKED BY: M.S., J.L.
DATE: 05/24/13
CCI JOB NO: 12-0
FILE NAME: BURCHARDI-POINDEXTER-SLOUGH-HEADGATE-DESIGN-DWG

REV.	DATE	DESCRIPTION	BY	APPD

CONFLUENCE consulting Incorporated

POINDEXTER SLOUGH
FISH HABITAT IMPROVEMENT PROJECT
BEAVERHEAD COUNTY, MONTANA

SITE PLAN
POINDEXTER SLOUGH HEADGATE AT BEAVERHEAD RIVERSite Plan

SHEET: 14

Class II Riprap Gradation - MT DOT riprap gradation (MT 2006 manual)

Riprap Gradation	Equivalent Spherical Diameter (ft)	Weight of Stone (lb)
D_{100} =	2.00	700
D_{85} =	1.80	500
D_{50} =	1.30	200
D_{20} =	0.60	20

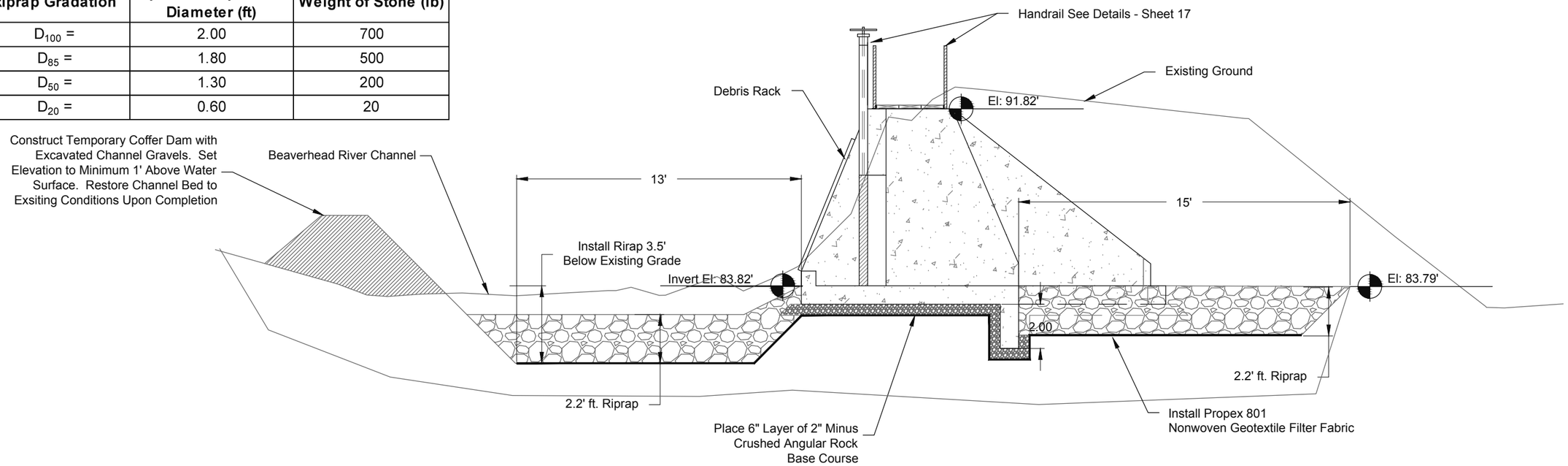

1/15 HEADGATE CROSS SECTION - POINDEXTER SLOUGH AT BEAVERHEAD RIVER
SCALE - 1"=5'

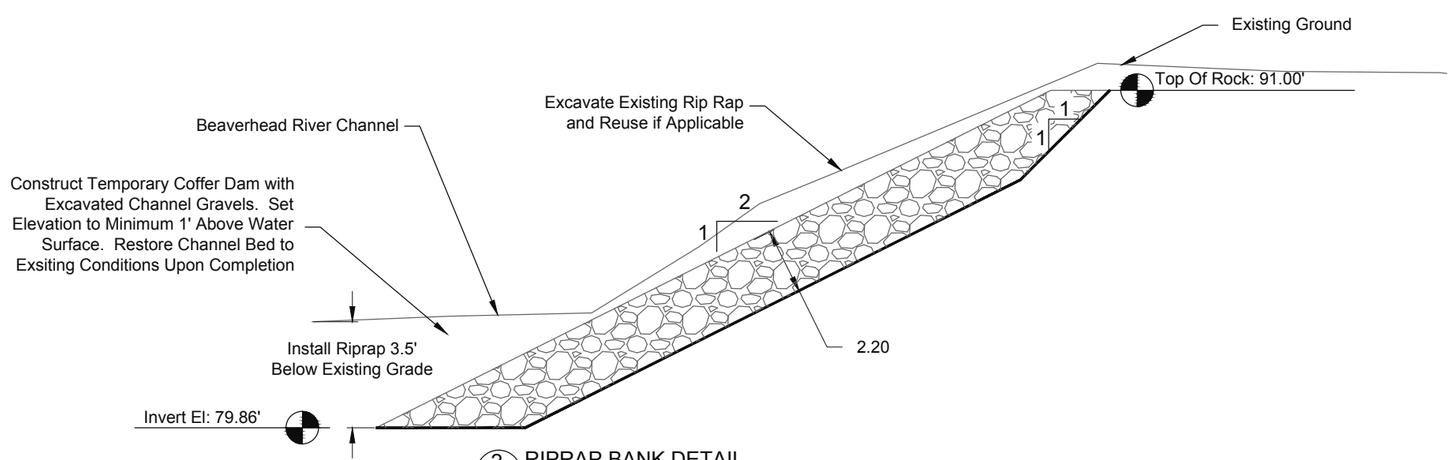

2/15 RIPRAP BANK DETAIL
SCALE - 1"=5'

DATE: 05/24/13
C61 FOR NO. BCD.003
FILE NAME: H:\BCD\BCD.003\CAD\CONTRACT DRAWINGS\POINDEXTERIMAGESDWG

DRAWN BY: T.T.
DESIGNED BY: T.T., J.L., M.S.
CHECKED BY: M.S., J.L.

REV.	DATE	DESCRIPTION	BY	APPD

CONFLUENCE consulting Incorporated

POINDEXTER SLOUGH
FISH HABITAT IMPROVEMENT PROJECT
BEAVERHEAD COUNTY, MONTANA

STRUCTURE DETAILS - POINDEXTER SLOUGH HEADGATE

SHEET: 15

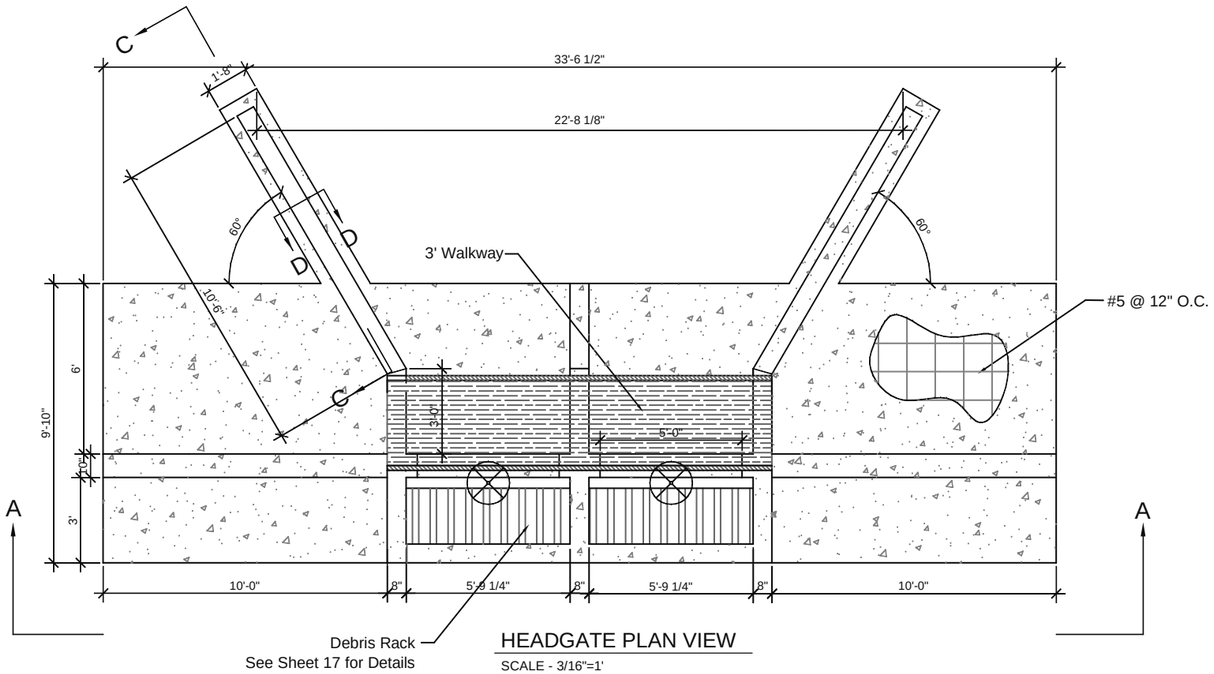

HEADGATE PLAN VIEW

SCALE - 3/16"=1'

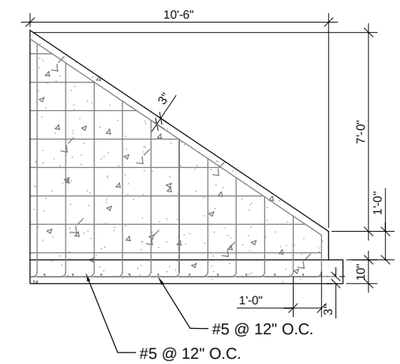

SECTION C-C

SCALE - 3/16"=1'

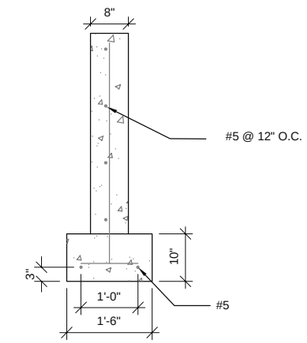

SECTION D-D

SCALE - 3/8"=1'

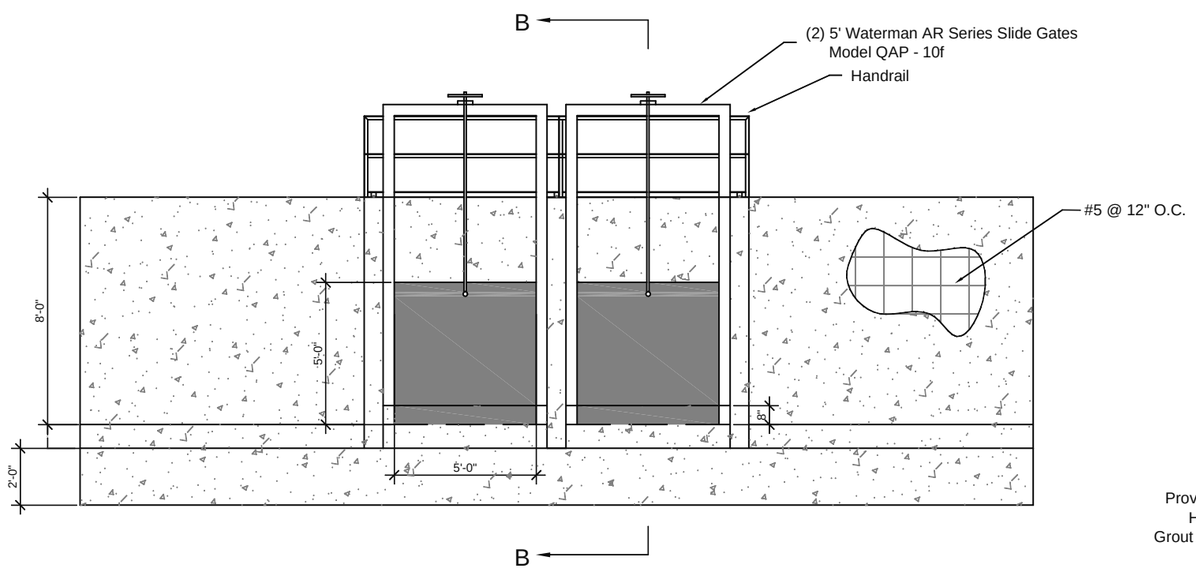

SECTION A-A

SCALE - 3/16"=1'

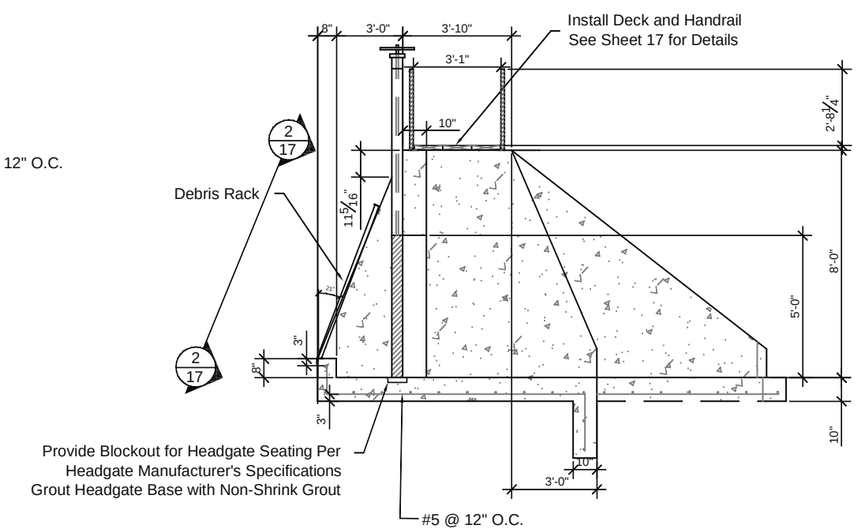

SECTION B-B

SCALE - 3/16"=1'

DRAWN BY: T.T.
DESIGNED BY: T.T., J.L., M.S.
CHECKED BY: M.S., J.L.
DATE: 05/24/13
C.G.T. JOB NO. BCD.001
FILE NAME: H:\DCF\DESIGN\DRAWINGS\
POINDEXTER\BA\DESIGN.dwg

REV.	DATE	DESCRIPTION	BY	APPD

CONFLUENCE consulting incorporated

POINDEXTER SLOUGH
FISH HABITAT IMPROVEMENT PROJECT
BEAVERHEAD COUNTY, MONTANA

STRUCTURE DETAILS - POINDEXTER SLOUGH HEADGATE

SHEET: 16

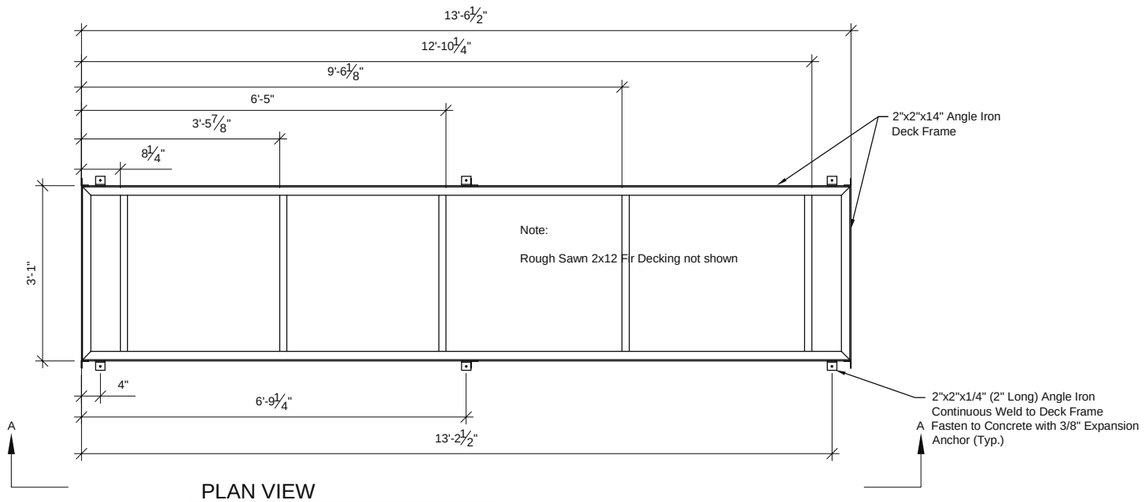

PLAN VIEW

SCALE - 3/8"=1'

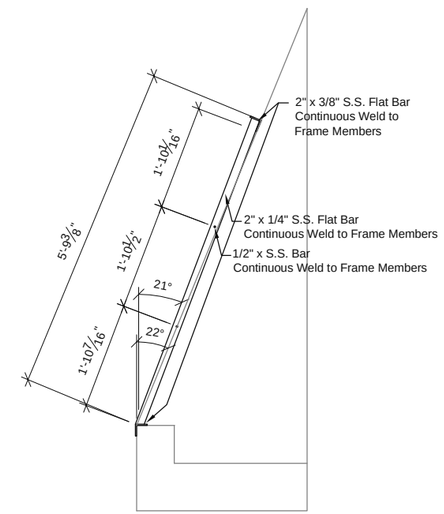

SECTION A-A

SCALE - 3/8"=1'

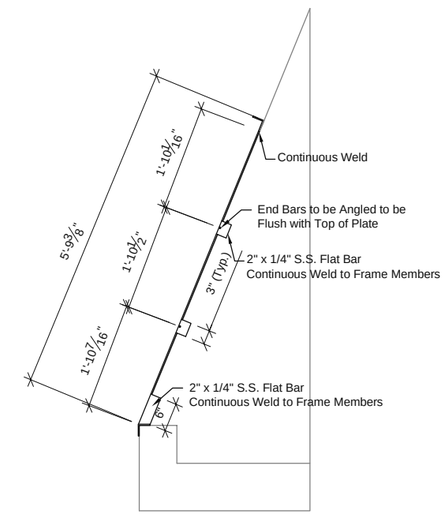

SECTION B-B

SCALE - 3/8"=1'

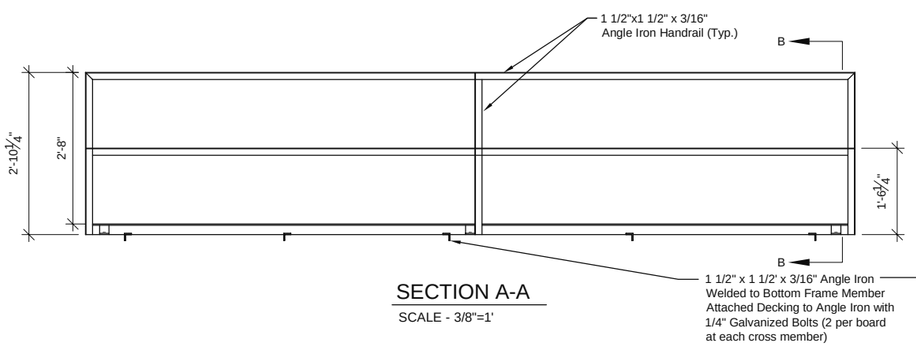

SECTION A-A

SCALE - 3/8"=1'

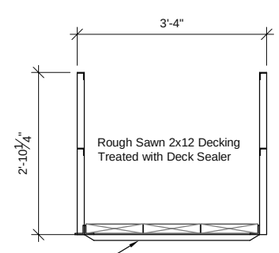

SECTION B-B

SCALE - 3/8"=1'

1/17 HANDRAIL/DECK DETAILS

SCALE - 3/8"=1'

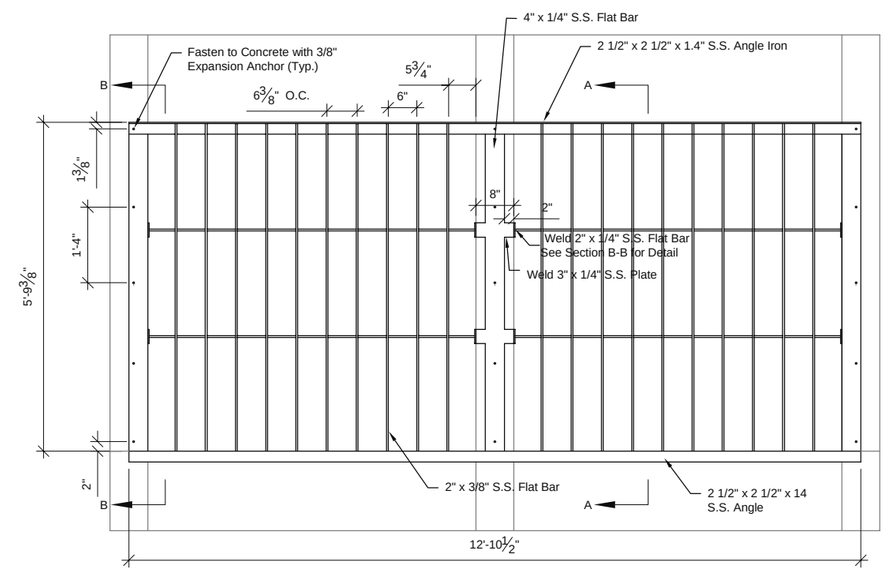

2/17 DEBRIS RACK DETAILS

SCALE - 3/8"=1'

DRAWN BY: T.T.
DESIGNED BY: T.T., J.L., M.S.
CHECKED BY: M.S., J.L.
DATE: 05/24/13
C.G.T. JOB NO. BCD.001
FILE NAME: H:\CAD\DESIGN\DRAWINGS\PORDEXTER\PRA\DESIGN2.DWG

REV.	DATE	DESCRIPTION	BY	APPD

CONFLUENCE consulting incorporated

POINDEXTER SLOUGH
FISH HABITAT IMPROVEMENT PROJECT
BEAVERHEAD COUNTY, MONTANA

STRUCTURE DETAILS - POINDEXTER SLOUGH HEADGATE

SHEET: 17

Table 1: Dillon Canal Headgate Quantities

Description	Qty	Unit
Concrete	23	yd^3
Rebar	1,341	lbs
Deck/Handrail	1	ea
Headgate	2	ea
2" Minus Crushed Rock	8	yd^3
Geosynthetic Filter Fabric	1,200	ft^2
Excavation	341	yd^3
Riprap Installation	77	yd^3
Earthfill	25	yd^3
Place Topsoil	35	yd^3
Coffer Dam Excavation/Fill	6	yd^3

Table 2: Dillon Canal Headgate Impact Areas

Description	Qty	Unit
Structure	365	sq.ft
Riprap	964	sq.ft
Coffer Dam Fill	250	sq.ft

Note: Quantities are provided as an estimate. Contractor is responsible for determining material quantities required to complete project.

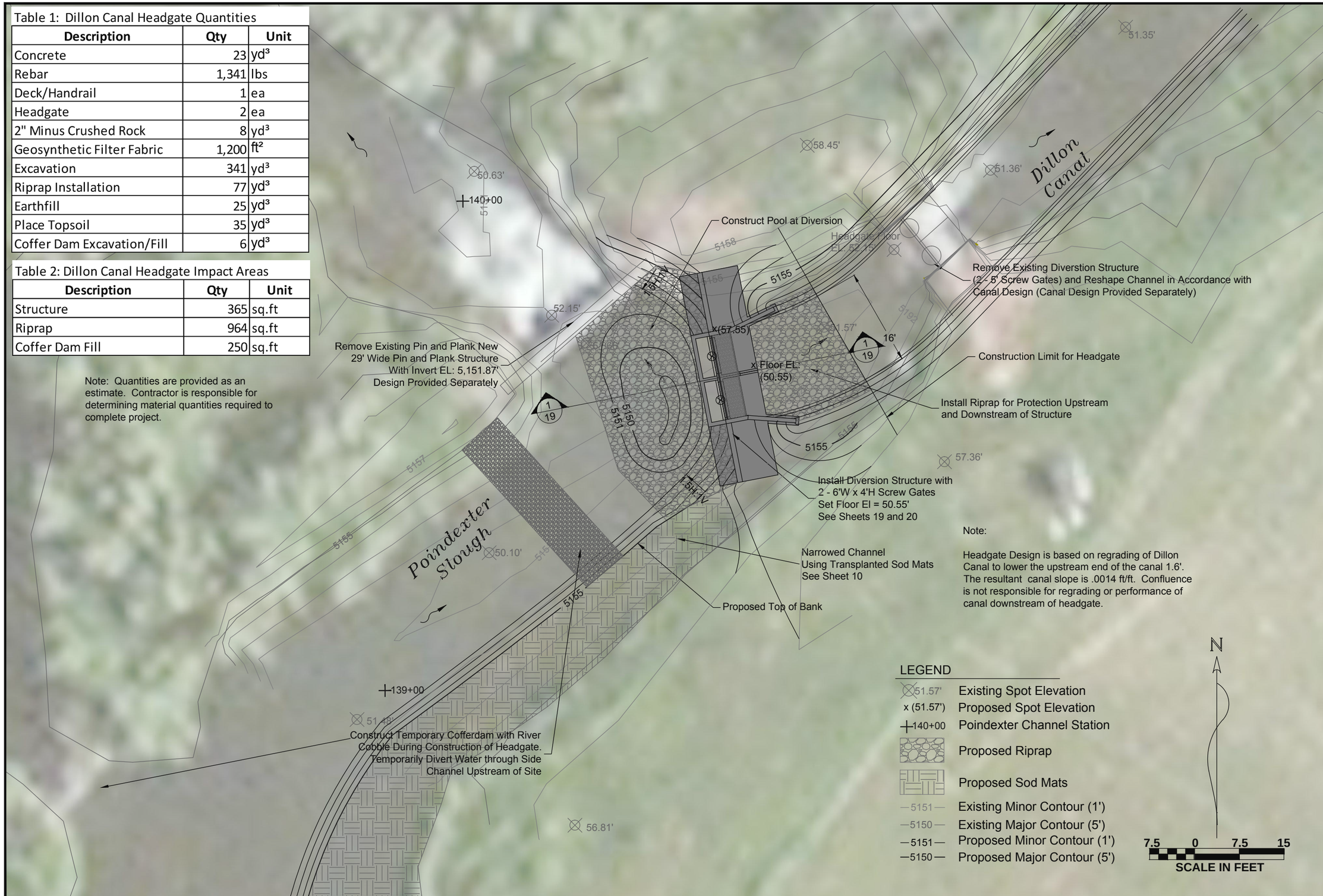

Note:

Headgate Design is based on regrading of Dillon Canal to lower the upstream end of the canal 1.6'. The resultant canal slope is .0014 ft/ft. Confluence is not responsible for regrading or performance of canal downstream of headgate.

REV.	DATE	DESCRIPTION	BY	APPD

DRAWN BY: T.T.
DESIGNED BY: T.T., J.L., M.S.
CHECKED BY: M.S., J.L.
DATE: 02/24/12
C.C.I. JOB NO. BCD.003
FILE NAME: BUR-CONFLUENCE-SITE-PLAN-POINDEXTER-DESIGN-DESIGN.DWG

CONFLUENCE consulting Incorporated

POINDEXTER SLOUGH
FISH HABITAT IMPROVEMENT PROJECT
BEAVERHEAD COUNTY, MONTANA

SITE PLAN
DILLON CANAL
HEADGATE AT
POINDEXTER
SLOUGH

SHEET: 18

Class II Riprap Gradation - MT DOT riprap gradation (MT 2006 manual)

Riprap Gradation	Equivalent Spherical Diameter (ft)	Weight of Stone (lb)
D_{100} =	2.00	700
D_{85} =	1.80	500
D_{50} =	1.30	200
D_{20} =	0.60	20

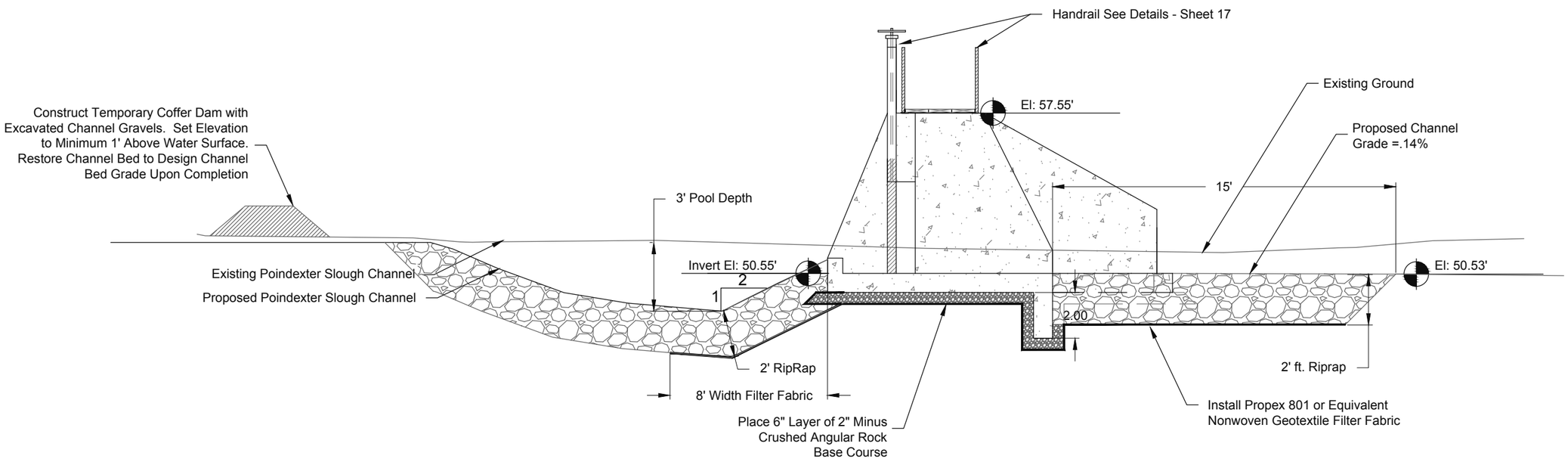

1/19 HEADGATE CROSS SECTION - DILLON CANAL HEADGATE
SCALE - 1"=5'

DRAWN BY: T.T.
DESIGNED BY: T.T., J.L., M.S.
CHECKED BY: M.S., J.L.
DATE: 05/24/13
CCI JOB NO. BCD.003
FILE NAME: H:\BCD\DOT\DESIGN\DRAWINGS\POINDEXTER\FINAL\DESIGN.DWG

REV.	DATE	DESCRIPTION	BY	APP'D

CONFLUENCE consulting incorporated

POINDEXTER SLOUGH
FISH HABITAT IMPROVEMENT PROJECT
BEAVERHEAD COUNTY, MONTANA

STRUCTURE DETAILS - DILLON CANAL HEADGATE

SHEET: 19

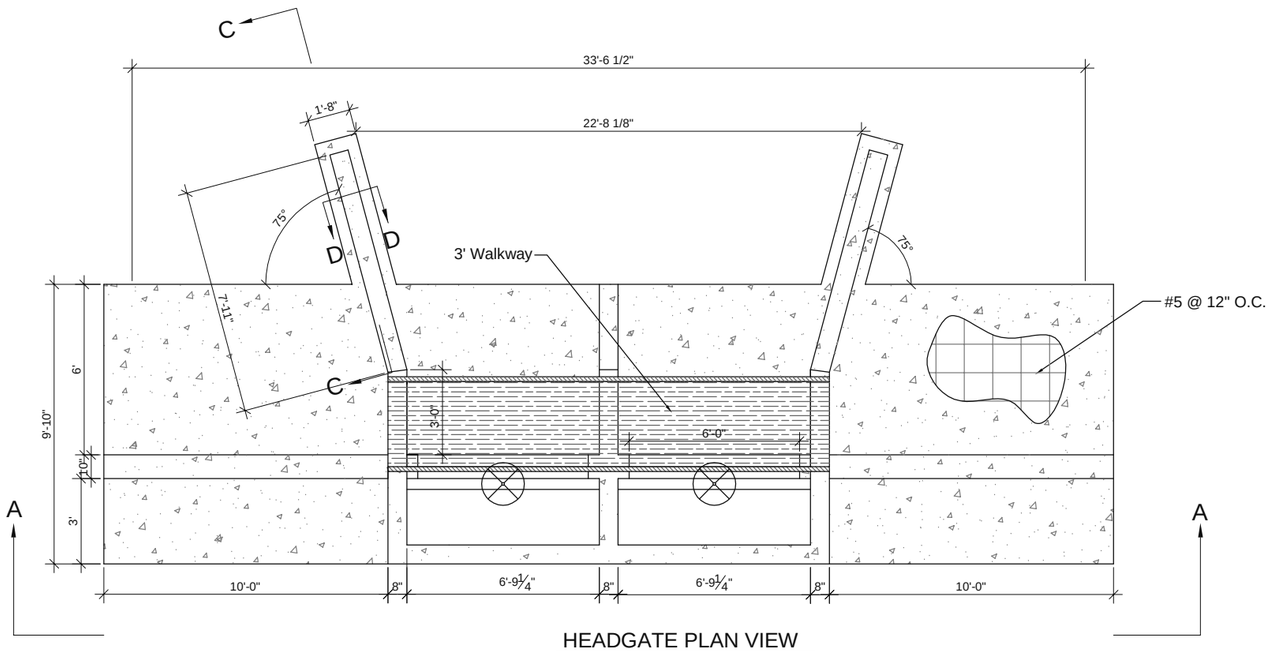

HEADGATE PLAN VIEW

SCALE - 3/16"=1'

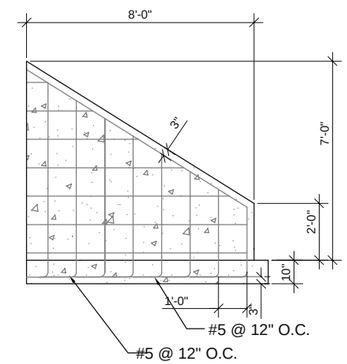

SECTION C-C

SCALE - 3/16"=1'

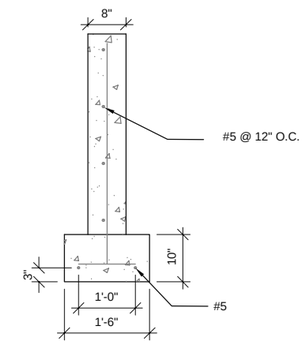

SECTION D-D

SCALE - 3/8"=1'

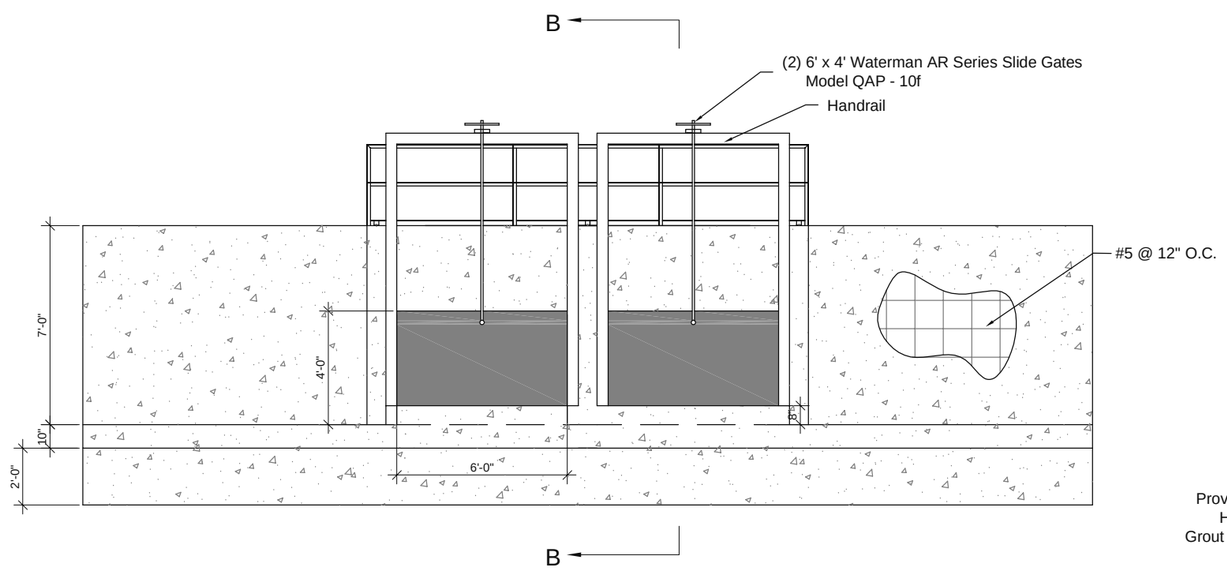

SECTION A-A

SCALE - 3/16"=1'

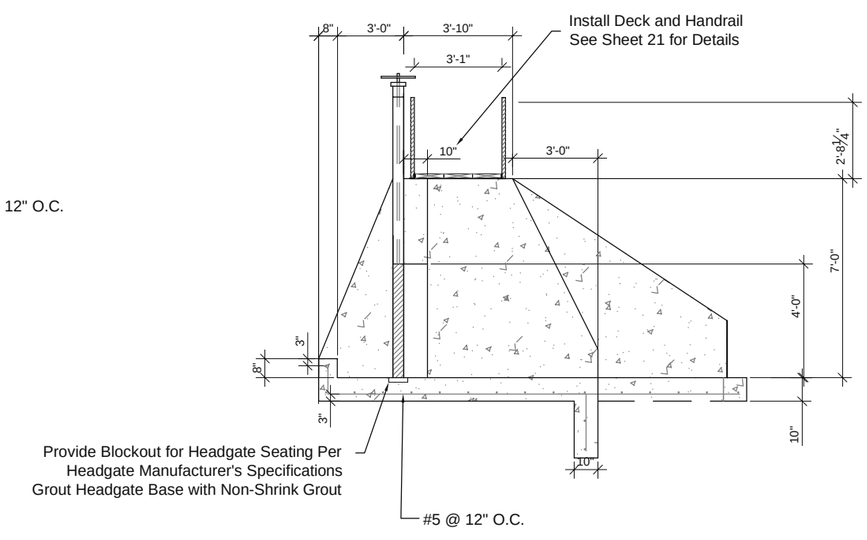

SECTION B-B

SCALE - 3/16"=1'

REV.	DATE	DESCRIPTION	BY	APPD

DRAWN BY: T.T.
DESIGNED BY: T.T., J.L., M.S.
CHECKED BY: M.S., J.L.
DATE: 05/24/13
C.G.T. JOB NO. BCD.001
FILE NAME: H:\DCF\DESIGN\DRAWINGS\
POINDEXTER\PRAO\DSN\Sheet

CONFLUENCE consulting incorporated

POINDEXTER SLOUGH
FISH HABITAT IMPROVEMENT PROJECT
BEAVERHEAD COUNTY, MONTANA

STRUCTURE DETAILS - DILLON CANAL HEADGATE

SHEET: 20

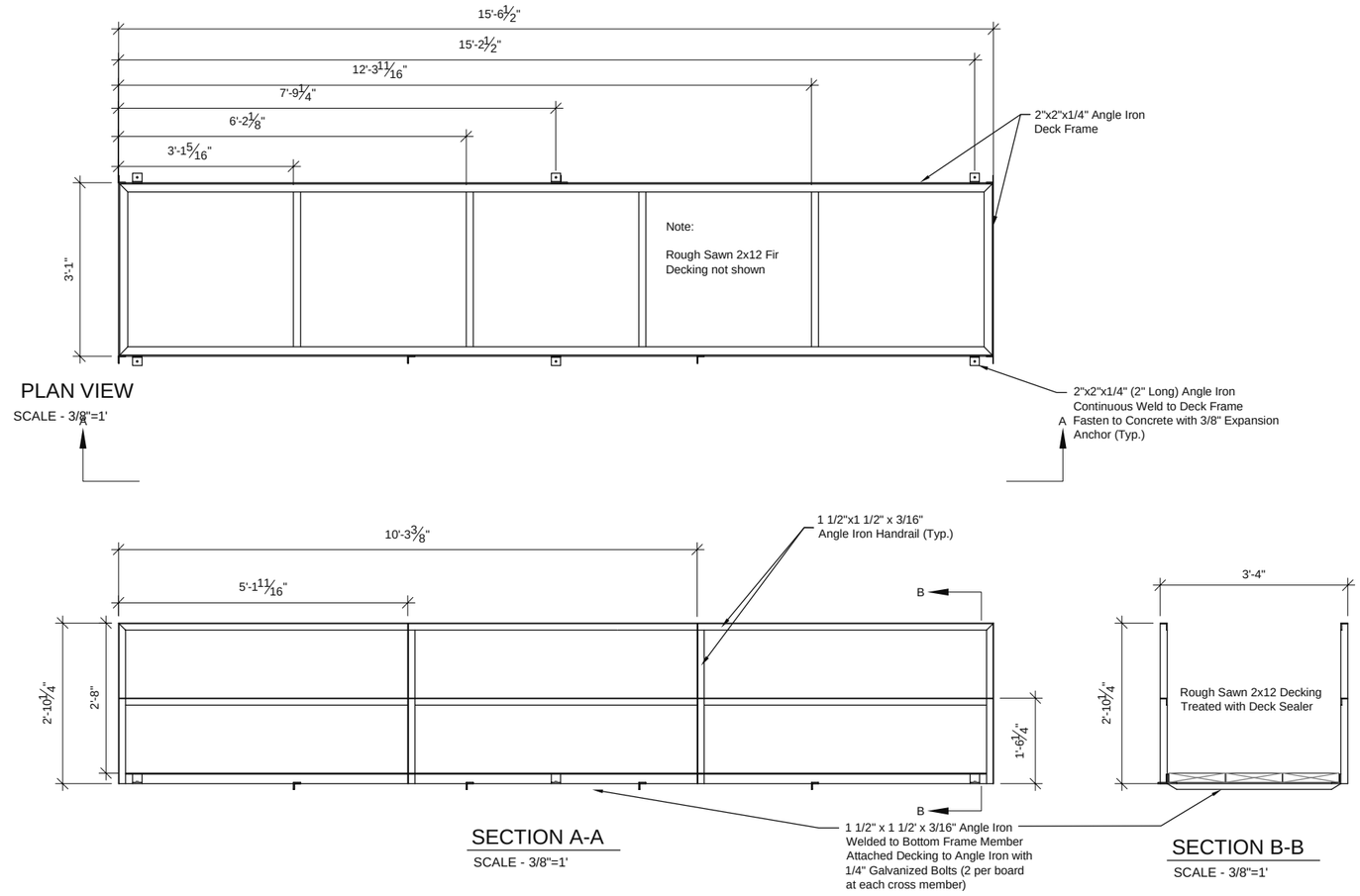

PLAN VIEW
SCALE - 3/8"=1'

SECTION A-A
SCALE - 3/8"=1'

SECTION B-B
SCALE - 3/8"=1'

1/21 HANDRAIL/DECK DETAILS
SCALE - 3/8"=1'

DRAWN BY: T.T.
DESIGNED BY: T.T., J.L., M.S.
CHECKED BY: M.S., J.L.
DATE: 05/24/13
CCI JOB NO. BCD.003
FILE NAME: H:\BCD.003\DESIGN\DRAWINGS\POINDEXTER\FINAL\DESIGN.DWG

REV.	DATE	DESCRIPTION	BY	APP'D

CONFLUENCE consulting incorporated

POINDEXTER SLOUGH
FISH HABITAT IMPROVEMENT PROJECT
BEAVERHEAD COUNTY, MONTANA

STRUCTURE DETAILS - DILLON CANAL HEADGATE

SHEET: 21

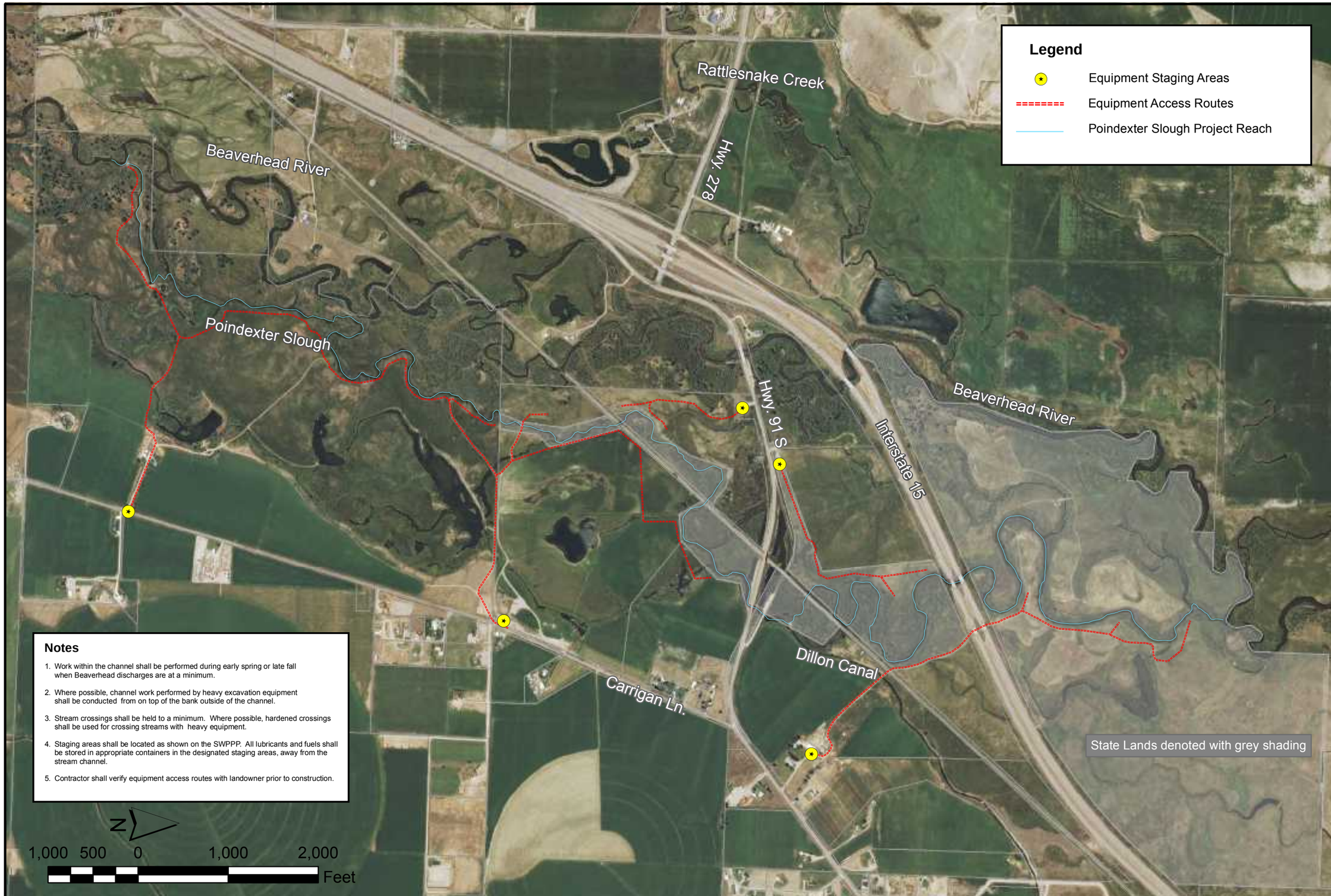

Notes

1. Work within the channel shall be performed during early spring or late fall when Beaverhead discharges are at a minimum.
2. Where possible, channel work performed by heavy excavation equipment shall be conducted from on top of the bank outside of the channel.
3. Stream crossings shall be held to a minimum. Where possible, hardened crossings shall be used for crossing streams with heavy equipment.
4. Staging areas shall be located as shown on the SWPPP. All lubricants and fuels shall be stored in appropriate containers in the designated staging areas, away from the stream channel.
5. Contractor shall verify equipment access routes with landowner prior to construction.

DRAWN BY: T. T.
DESIGNED BY: T. T., J.L., M.S.
CHECKED BY: M. S.
DATE: 05/24/13
CCI JOB NO. BCD.003
FILE NAME: Access&Staging.mxd

REV.	DATE	DESCRIPTION	BY	APP'D

CONFLUENCE consulting incorporated

POINDEXTER SLOUGH FISH HABITAT IMPROVEMENT BEAVERHEAD COUNTY, MONTANA

ACCESS, STAGING & STORMWATER POLLUTION PREVENTION PLAN

SHEET: 22

Upper Headgate:

Before:

During:

After:

Channel Work (Reach 3)

Before:

During:

After:

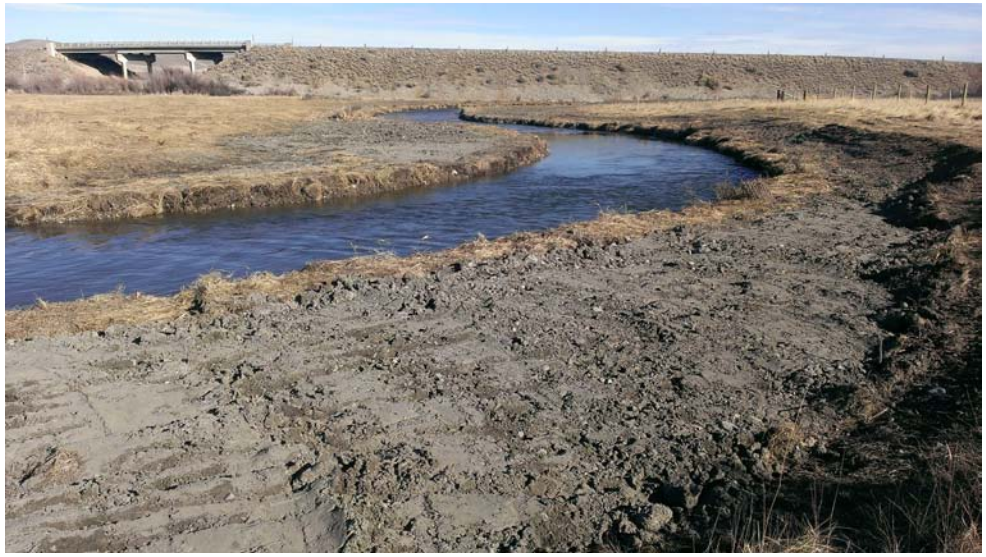

Before:

After:

Reach 4 Current Conditions: