CONSTRUCTION PLANS FOR

SOUTH FORK SIXTEENMILE CREEK FISH BARRIER

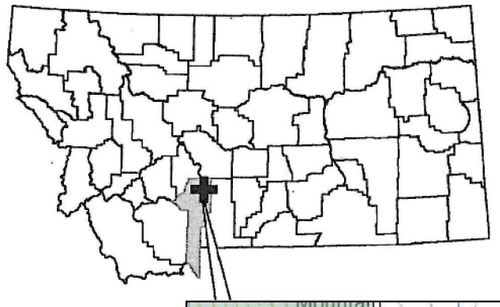

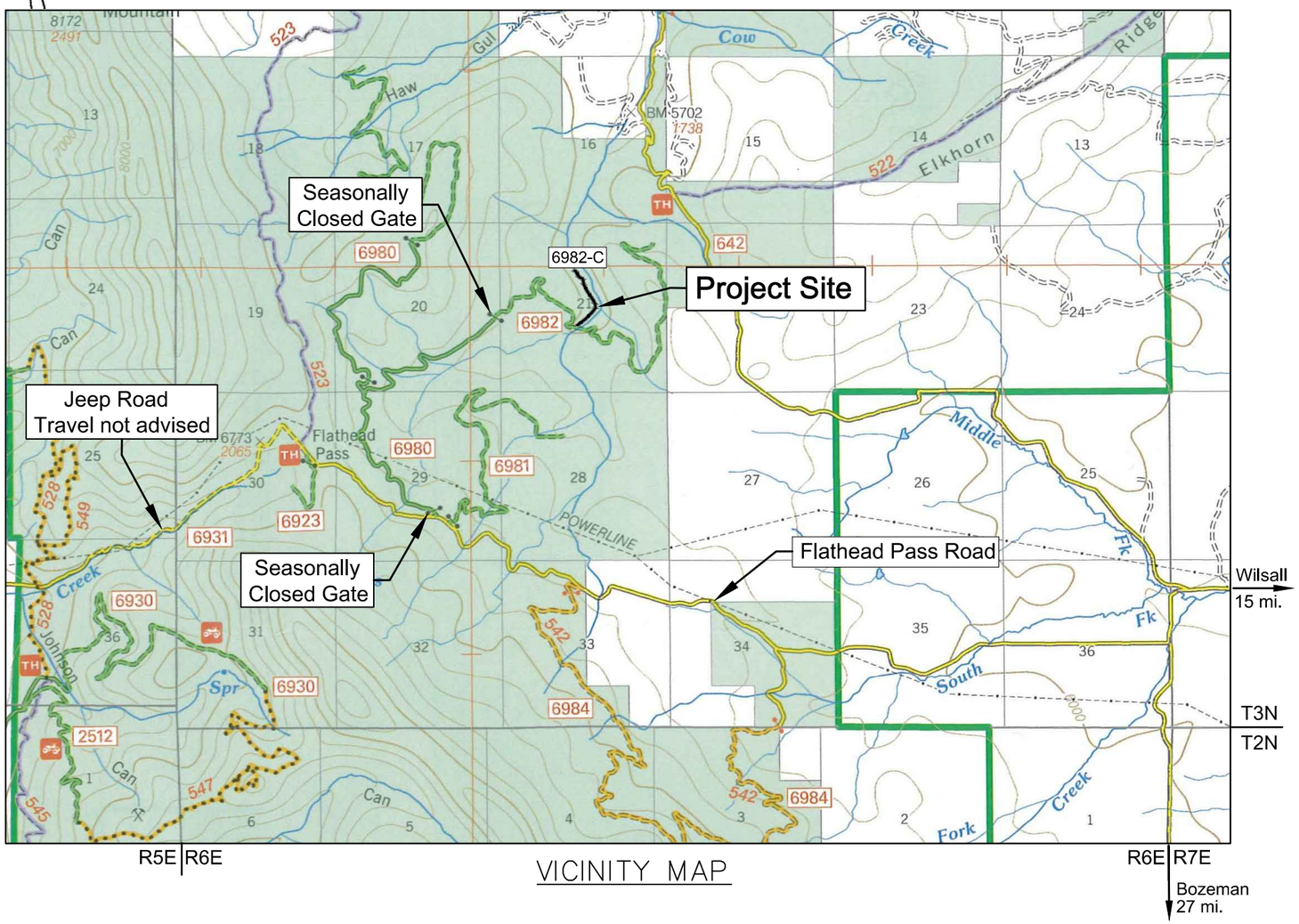

VICINITY MAP

SHEET INDEX

SHEET	TITLE
1	COVER
2	TEMP. ACCESS ROAD & GENERAL NOTES
3	PLAN VIEW OF SITE & ESTIMATED QUANTITIES
4	LONGITUDINAL PROFILE & SECTION A
5	BARRIER SECTIONS B & C
6	BARRIER SECTIONS D & E AND SECTION F
7	FOUNDATION & WALL PLAN VIEW
8	BARRIER SECTIONS & STRUCTURAL NOTES
9	WALL SECTIONS
10	WALL SECTIONS & CONCRETE DETAILS
11	GRADING AND CLASS 3 RIPRAP PLAN VIEW

MONTANA
MICHAEL THOMAS JENSEN
13098PE
REGISTERED
PROFESSIONAL ENGINEER

7/19/2013

DJ&A, P.C.
CONSULTING ENGINEERS & LAND SURVEYORS
3203 Russell Street, Missoula, Montana 59801-8591
Phone 406/721-4320 Fax 406/549-6371

GENERAL NOTES

1. GEOTECHNICAL INVESTIGATION. A GEOTECHNICAL INVESTIGATION HAS NOT BEEN CONDUCTED AT THE PROJECT SITE.

2. SPECIFICATIONS. MATERIALS AND CONSTRUCTION SHALL BE IN ACCORDANCE WITH THE STANDARD SPECIFICATIONS FOR CONSTRUCTION OF ROADS AND BRIDGES ON FEDERAL HIGHWAY PROJECTS, FP-03 (U.S. CUSTOMARY UNITS) AND THE SUPPLEMENTAL SPECIFICATIONS INCLUDED IN THE CONTRACT.

3. MATERIAL QUANTITIES. ESTIMATED QUANTITIES ARE PROVIDED FOR INFORMATION ONLY. CONTRACTOR TO VERIFY QUANTITIES.

4. DEWATERING AND EROSION CONTROL. DEWATER AND PROTECT AGAINST SOIL EROSION AND SEDIMENTATION DURING CONSTRUCTION IN ACCORDANCE WITH SECTION 157 AND PROJECT PERMITS. PREPARE AND SUBMIT A DEWATERING AND EROSION CONTROL PLAN TO C.O. FOR APPROVAL. GROUND DISTURBING WORK SHALL NOT COMMENCE UNTIL DEWATERING AND EROSION CONTROL PLAN HAS BEEN APPROVED IN WRITING BY THE C.O.

   CONTRACTOR SHOULD ANTICIPATE WATER INFILTRATING INTO EXCAVATIONS AND SHALL REMOVE WATER AS NECESSARY TO COMPLETE THE WORK (INCLUDING BUT NOT LIMITED TO MATERIAL PLACEMENT AND COMPACTION) IN ACCORDANCE WITH ALL CONTRACT REQUIREMENTS.

   WORK WITHIN THE STREAM CHANNEL SHALL OCCUR ONLY WHILE THE CHANNEL IS COMPLETELY DEWATERED.

   APPROVAL OF THE CONTRACTOR'S DEWATERING AND EROSION CONTROL PLAN BY THE C.O. DOES NOT RELIEVE THE CONTRACTOR OF THEIR RESPONSIBILITY TO MEET ALL CONTRACT REQUIREMENTS ASSOCIATED WITH DEWATERING AND EROSION CONTROL. IF THE METHODS INDENTIFIED BY THE CONTRACTOR IN THEIR DEWATERING AND SEDIMENT CONTROL PLAN FAIL TO PROVIDE CONDITIONS UNDER WHICH SPECIFIED CONSTRUCTION RESULTS CAN BE ACHIEVED, OR FAIL TO PROVIDE ENVIRONMENTAL PROTECTION AS PRESCRIBED IN THE CONTRACT OR PROJECT PERMITS, THE CONTRACTOR SHALL RE-EVALUATE AND SUBMIT A REVISED DEWATERING AND EROSION CONTROL PLAN TO THE C.O. PREPARATION OF REVISED PLAN(S) IS INCIDENTAL TO THE WORK.

5. CLEARING AND DISTURBANCE LIMITS. CLEARING AND DISTURBANCE LIMITS ARE SHOWN ON THE PLANS AND WILL BE STAKED IN THE FIELD BY THE C.O. ADDITIONAL AREAS FOR STORAGE/STOCKPILING SHALL BE SOLELY AT THE DISCRETION OF THE C.O. AND AS APPROVED AND STAKED BY THE C.O. AFTER SECURING C.O. APPROVAL. PORTIONS OF THE "EXISTING ROAD" (ROAD #6982-C) SHOWN ON THIS SHEET MAY BE USED AS STOCKPILING AND STAGING AREAS SUBJECT TO C.O. APPROVAL..

6. CLEARING AND GRUBBING. CLEARING AND GRUBBING SHALL BE COMPLETED IN ACCORDANCE WITH SECTION 201. TREES WITHIN THE CLEARING AND DISTURBANCE LIMITS AND TEMPORARY ROAD ALIGNMENT SHALL BE REMOVED AND DISPOSED OF IN ACCORDANCE WITH SECTION 201. THIS WORK IS INCLUDED IN PAY ITEM 201-01.

   TOPSOIL SHALL BE SALVAGED TO A DEPTH OF 1 FT BELOW THE SURFACE FROM ALL AREAS TO BE DISTURBED BY EXCAVATION, BACKFILL (WITH THE EXCEPTION OF THE WETLAND BENCH), OR MATERIAL/EQUIPMENT STORAGE/OPERATION AND SHALL BE STOCKPILED SEPARATELY FROM OTHER MATERIALS. FOLLOWING CONSTRUCTION, SALVAGED TOPSOIL SHALL BE SPREAD EVENLY OVER ALL DISTURBED SURFACES TO PROVIDE A MINIMUM 4-IN. DEEP TOPSOIL LAYER. ADJACENT DUFF (LIVE AND DEAD VEGETATION MATERIAL) SHALL BE RAKED ONTO THE DISTURBED AREAS. CONSERVING AND REPLACING TOPSOIL AND PLACING DUFF IS INCLUDED IN PAY ITEM 201-01. CONSERVING AND REPLACING TOPSOIL AND DUFF IS NOT REQUIRED FOR THE WETLAND BENCH CONSTRUCTION.

   BEFORE ALLOWING WATER TO POND UPSTREAM OF THE COMPLETED BARRIER, THE CONTRACTOR SHALL REMOVE ALL TREES AND LOGS LOCATED WITHIN THE UPSTREAM AREA TO BE INUNDATED WITH WATER (INUNDATION AREA). THE PERIMETER OF THE INUNDATION AREA WILL BE STAKED BY THE C.O. AT ELEVATION 108.3. THE APPROXIMATE INUNDATION AREA PERIMETER IS SHOWN ON THIS SHEET. TREES AND LOGS SHALL BE DISPOSED OF BY PLACING THEM ON THE GROUND SURFACE OUTSIDE OF THE STAKED INUNDATION AREA, AT LEAST 5 FEET OUTSIDE THE STAKED PERIMETER, WHERE DIRECTED BY THE C.O. LOGS AND TREES TO BE REMOVED ARE OF VARYING SIZE. ESTIMATED NUMBER OF 8-INCH AND LARGER TREES AND LOGS TO BE REMOVED IS 25 AND 15, RESPECTIVELY. NUMEROUS SMALLER LOGS AND TREES ARE ALSO PRESENT. EQUIPMENT MAY BE OPERATED WITHIN THE INUNDATION AREA AS NECESSARY TO COMPLETE THE TREE REMOVAL AND DISPOSAL WORK. CONTRACTOR SHALL MINIMIZE DISTURBANCE OUTSIDE OF THE STAKED INUNDATION AREA PERIMETER. REMOVAL AND DISPOSAL OF TREES AND LOGS FROM WITHIN THE INUNDATION AREA WILL BE PAID FOR UNDER PAY ITEM 201-01.

7. CONTROL POINTS. EXISTING CONTROL POINTS ARE SHOWN ON THE DRAWINGS. CONTRACTOR SHALL LOCATE LAYOUT POINTS IN ACCORDANCE WITH SECTION 152. SECURE C.O. APPROVAL OF SURVEYED LAYOUT POINTS PRIOR TO COMMENCING CONSTRUCTION ACTIVITIES. AFTER INSPECTION OF SURVEYED LAYOUT POINTS, THE C.O. MAY ADJUST THE LOCATION OF THE STRUCTURE (IN THE HORIZONTAL PLANE) UP TO 3 FEET TO FACILITATE EFFICIENT CONSTRUCTION AND/OR IMPROVE STRUCTURAL STABILITY OF THE BARRIER.

8. STRUCTURE EXCAVATION. COMPLETE STRUCTURE EXCAVATION IN ACCORDANCE WITH SECTION 208. STRUCTURE EXCAVATION INCLUDES BEDROCK EXCAVATION AND BLASTING. EXCAVATION LIMITS SHOWN ON SHEET 7 ARE BASED ON AN ASSUMPTION OF SOIL TYPE C (GRANULAR SOILS) WITH MAXIMUM ALLOWABLE SLOPE ON EXCAVATION WALLS OF 1.5:1 (HORIZONTAL: VERTICAL) IN ACCORDANCE WITH: *OSHA-EXCAVATIONS, 1926 SUBPART P, APPENDIX A - SOIL CLASSIFICATION AND OSHA-EXCAVATIONS, 1926 SUBPART P, APPENDIX B - SLOPING AND BENCHING.*

   STRUCTURE EXCAVATION QUANTITY SHOWN IS FOR INFORMATIONAL PURPOSES ONLY AND IS BASED ON EXCAVATION LIMITS SHOWN, WHICH CORRESPOND TO MAXIMUM ALLOWABLE SLOPE ON EXCAVATION WALLS OF 1.5:1 (HORIZONTAL: VERTICAL) . CONTRACTOR IS RESPONSIBLE FOR DETERMINING ACTUAL QUANTITIES BASED ON THEIR OWN EXCAVATION PLAN.

   CONTRACTOR SHALL SUBMIT AN EXCAVATION PLAN TO THE C.O. FOR APPROVAL. PLAN SHALL INCLUDE DRAWINGS AND WRITTEN OUTLINE ILLUSTRATING AND DESCRIBING PROPOSED EXCAVATION LIMITS, METHODS, EQUIPMENT, LOCATION OF STOCKPILES, AND ESTIMATED QUANTITIES AND SHALL COMPLY WITH OSHA EXCAVATION SOIL TYPING AND REQUIREMENTS. CHANGES TO THE EXCAVATION LIMITS SHOWN ON SHEET 7 FOR CONTRACTOR'S DEWATERING METHODS OR OTHER CONTRACTOR CONVENIENCE MUST BE SHOWN ON THE EXCAVATION PLAN. SUCH CHANGES ARE THE RESPONSIBILITY OF THE CONTRACTOR AND ARE INCIDENTAL TO THE WORK.

   EXCAVATED MATERIAL RESULTING FROM STRUCTURE EXCAVATION SHALL BE DISPOSED OF BY INCORPORATING IT AS FILL IN WETLAND BENCH CONSTRUCTION. HAUL, PLACE, SHAPE AND COMPACT MATERIAL IN ACCORDANCE WITH WETLAND BENCH CONSTRUCTION REQUIREMENTS ON SHEETS 2 AND 6 AND SUBSECTION 208.04. WETLAND BENCH CONSTRUCTION IS INCLUDED IN PAY ITEM 208-01. NO SEPARATE PAYMENT WILL BE MADE FOR WETLAND BENCH CONSTRUCTION WORK.

9. STRUCTURAL BACKFILL. WITH THE EXCEPTION OF (a) BACKFILL ASSOCIATED WITH TEMPORARY ACCESS ROAD CONSTRUCTION/REHAB AND (b) PLACEMENT OF MATERIAL IN WETLAND BENCH CONSTRUCTION, ALL BACKFILL ASSOCIATED WITH THE BARRIER SHALL BE STRUCTURAL BACKFILL. COMPLETE STRUCTURAL BACKFILL IN ACCORDANCE WITH SECTION 208 AND SUBSECTION 704.04.

   THE CONTRACTOR SHALL FURNISH STRUCTURAL BACKFILL MATERIAL MEETING THE REQUIREMENTS OF SUBSECTION 704.04 IN THE QUANTITY REQUIRED TO COMPLETE THE WORK AS SHOWN AND SPECIFIED. MATERIAL FURNISHED BY THE CONTRACTOR SHALL ORIGINATE FROM COMMERCIAL SOURCES MEETING THE REQUIREMENTS OF SUBSECTION 105.02. FURNISHING OF STRUCTURAL BACKFILL SHALL BE INCIDENTAL TO PAY ITEM 208-02. NO SEPARATE PAYMENT WILL BE MADE FOR FURNISHING STRUCTURAL BACKFILL MATERIAL.

   COMPACTION OF STRUCTURAL BACKFILL SHALL COMPLY WITH SUBSECTION 208.11. SUBSECTION 208.11 REQUIREMENTS INCLUDE, BUT ARE NOT LIMITED TO, DETERMINATION OF OPTIMUM MOISTURE CONTENT AND MAXIMUM DENSITY, ADJUSTMENT OF MOISTURE CONTENT, COMPACTION, AND IN-PLACE TESTING OF DENSITY AND MOISTURE CONTENT. ALL WORK SPECIFIED IN SUBSECTION 208.11 IS INCLUDED IN PAY ITEM 208-02.

10. STRAW WATTLE INSTALLATION. DOWNSTREAM OF THE CONCRETE STRUCTURE, STAKE APPROVED, CERTIFIED WEED-FREE STRAW WATTLES AS SHOWN ON SHEET 5. INSTALL WATTLES LONGITUDINALLY ALONG STREAMBANKS AND RIPRAPPED BANKS AT ELEVATION DIRECTED BY THE C.O. (SLIGHTLY ABOVE LOW WATER ELEVATION). WATTLES SHALL EXTEND FROM THE DOWNSTREAM END OF THE GROUTED RIPRAP FOR A DISTANCE OF 40 FT DOWNSTREAM ON BOTH SIDES OF STREAM. FURNISHING AND INSTALLING WATTLES IS INCIDENTAL.

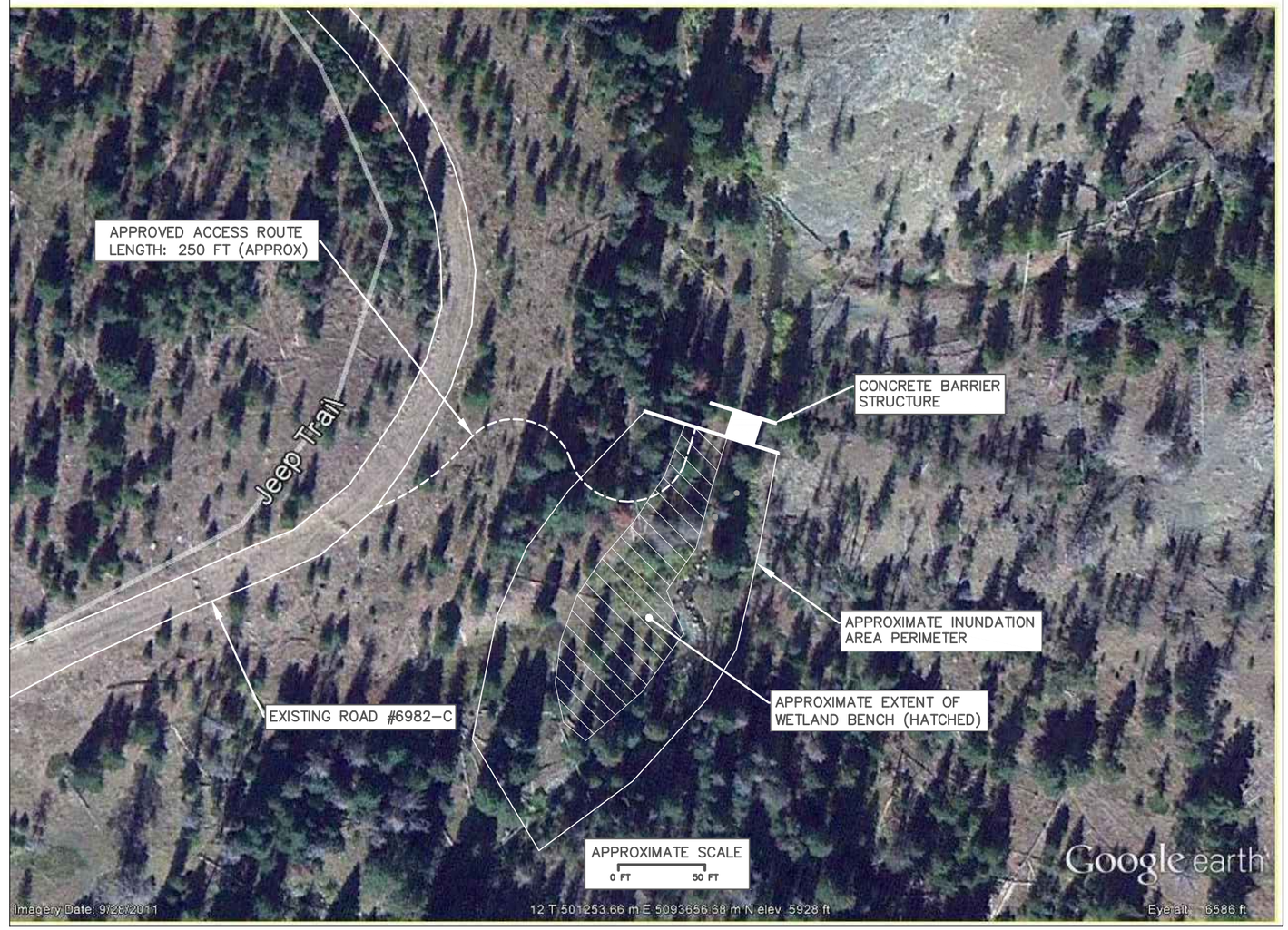

TEMPORARY ACCESS ROUTES A & B

TEMPORARY ACCESS ROAD CONSTRUCTION/REHABILITATION NOTES

1. TEMPORARY ACCESS ROAD CONSTRUCTION/REHABILITATION SHALL COMPLETED IN ACCORDANCE WITH SECTION 204. THE CONTRACTOR SHALL UTILIZE THE APPROVED ROUTE SHOWN ON THIS SHEET. MINOR ROUTE ADJUSTMENTS MAY BE MADE SUBJECT TO C.O. APPROVAL. ROUTE SHALL BE STAKED BY THE CONTRACTOR AND APPROVED BY THE C.O. PRIOR TO DISTURBANCE OF GROUND SURFACE OR VEGETATION.

2. ROAD SURFACE WIDTH SHALL NOT EXCEED 12 FEET EXCEPT ON CURVES. ROAD SURFACE WIDTH MAY BE INCREASED TO C.O.-APPROVED WIDTH ON CURVES.

3. TOPSOIL SHALL BE CONSERVED AND STOCKPILED IN ACCORDANCE WITH THE "GENERAL NOTES" ON THIS SHEET. STOCKPILE TOPSOIL AND SUBSOIL IN SEPARATE WINDROWS IMMEDIATELY ADJACENT TO ROAD EDGE. MINIMIZE FOOTPRINT OF WINDROWS.

4. DISTURBANCE OF SOIL AND VEGETATION SHALL NOT EXTEND BEYOND THAT REQUIRED FOR ROAD SURFACE CONSTRUCTION AND SOIL STOCKPILING.

5. AFTER ALL OTHER WORK HAS BEEN COMPLETED AND ACCEPTED, REHABILITATE THE TEMPORARY ROAD BY SCARIFYING COMPACTED SURFACES TO A DEPTH OF 6-8 INCHES TO BREAK UP COMPACTION. USE STOCKPILED MATERIALS TO RESTORE THE ROAD AREAS TO PRE-PROJECT GROUND SURFACE GRADE, USING TOPSOIL AND ORGANIC MATTER AS THE SURFACE LAYER. DO NOT MIX SUBSOIL AND TOPSOIL. APPLY TOPSOIL AND DUFF IN ACCORDANCE WITH THE "GENERAL NOTES" ON THIS SHEET. PLACE SLASH AND DOWNED TREES ACROSS THE RESTORED GROUND SURFACE AS DIRECTED BY THE C.O.

Sixteenmile Creek Fish Barrier

ACCESS ROUTE & GENERAL NOTES

Drawn by: DW Date: 04/02/13
Revised: ____ Date: _____

Sheet 2 of 11

CONTROL AND LAYOUT POINT INFORMATION
(LOCAL COORDINATES)

POINT	NORTHING	EASTING	ELEVATION
CP100	20000.00	40000.00	100.00
CP101	20074.31	40009.12	98.73
LP1	19994.49	40012.99	104.00 (TOP OF WALL)
LP2	20011.35	40015.10	99.00 (TOP OF SLAB)
LP3	20030.23	40020.86	94.00 (TOP OF RIPRAP)

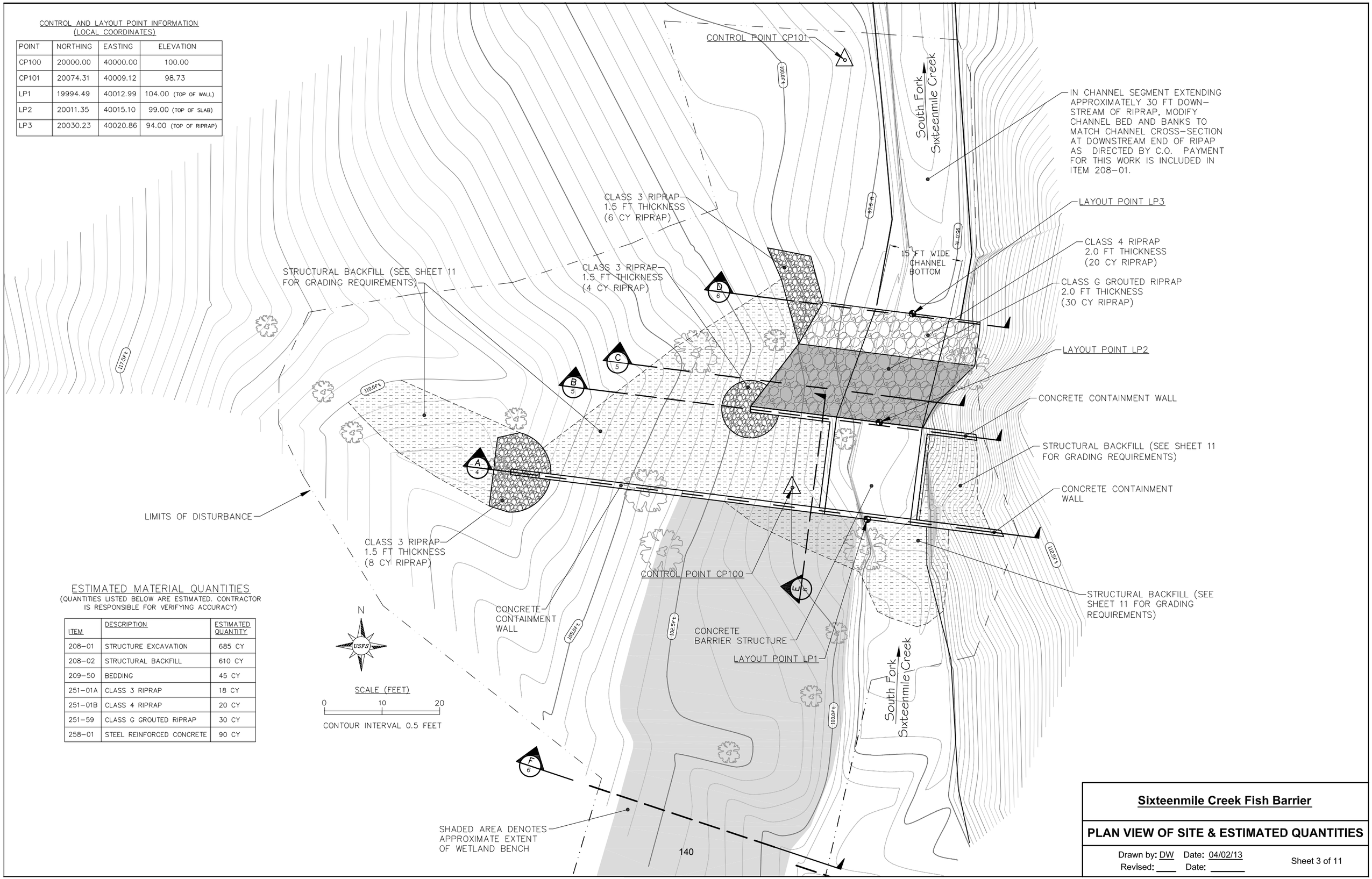

ESTIMATED MATERIAL QUANTITIES
(QUANTITIES LISTED BELOW ARE ESTIMATED. CONTRACTOR IS RESPONSIBLE FOR VERIFYING ACCURACY)

ITEM	DESCRIPTION	ESTIMATED QUANTITY
208-01	STRUCTURE EXCAVATION	685 CY
208-02	STRUCTURAL BACKFILL	610 CY
209-50	BEDDING	45 CY
251-01A	CLASS 3 RIPRAP	18 CY
251-01B	CLASS 4 RIPRAP	20 CY
251-59	CLASS G GROUTED RIPRAP	30 CY
258-01	STEEL REINFORCED CONCRETE	90 CY

Sixteenmile Creek Fish Barrier

PLAN VIEW OF SITE & ESTIMATED QUANTITIES

Drawn by: DW Date: 04/02/13
Revised: ____ Date: _____

Sheet 3 of 11

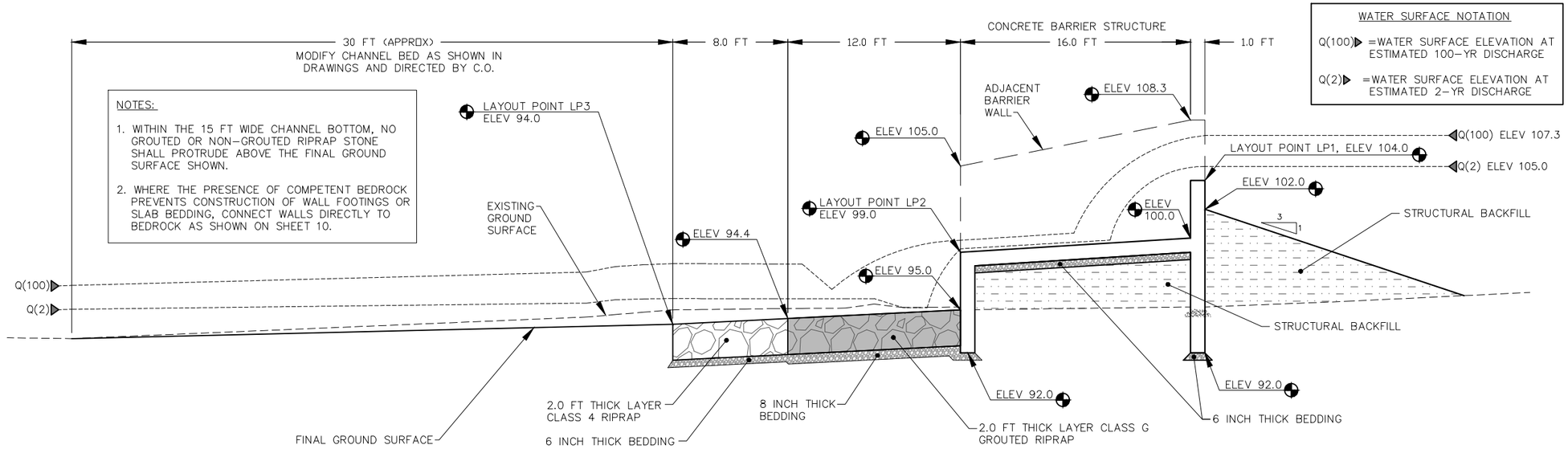

LONGITUDINAL SECTION THROUGH CENTERLINE OF STRUCTURE

(NOT TO SCALE)

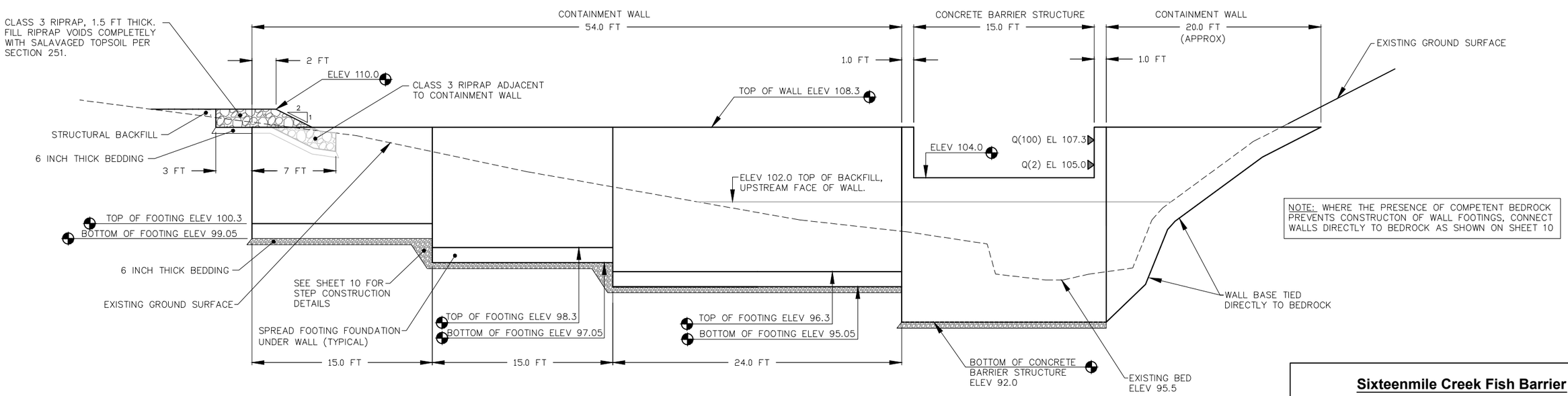

A/4 SECTION

CROSS SECTION AT UPSTREAM FACE OF CONCRETE BARRIER STRUCTURE

(NOT TO SCALE)

Sixteenmile Creek Fish Barrier

LONGITUDINAL PROFILE & SECTION A

Drawn by: DW Date: 04/02/13
Revised: ____ Date: _____

Sheet 4 of 11

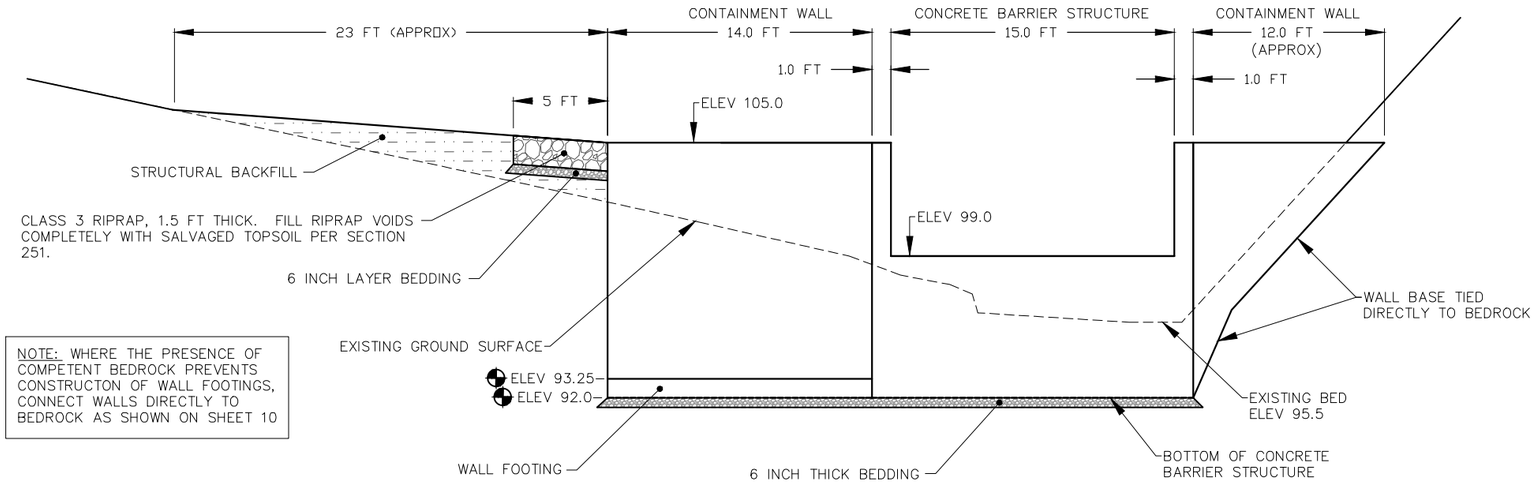

NOTE: WHERE THE PRESENCE OF COMPETENT BEDROCK PREVENTS CONSTRUCTON OF WALL FOOTINGS, CONNECT WALLS DIRECTLY TO BEDROCK AS SHOWN ON SHEET 10

B/5 SECTION

CROSS SECTION THROUGH DOWNSTREAM FACE OF CONCRETE BARRIER STRUCTURE AND CONTAINMENT WALLS

(NOT TO SCALE)

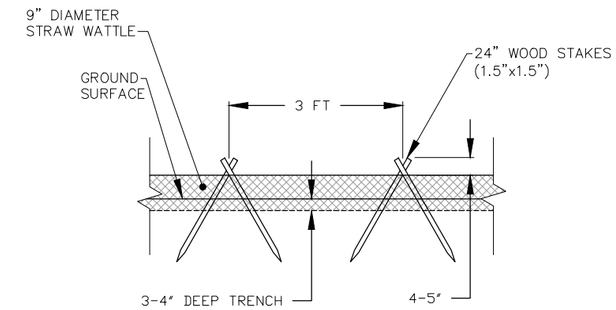

STRAW WATTLE INSTALLATION DETAIL

(NOT TO SCALE)

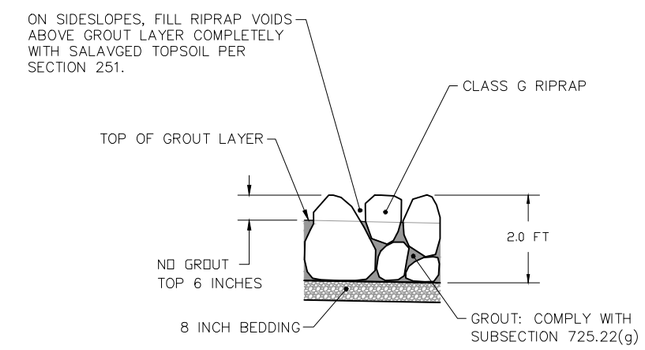

TYPICAL GROUTED RIPRAP DETAIL

(NOT TO SCALE)

SIDESLOPE NOTES: SIDESLOPE VARIES AS FOLLOWS

1:1 (HORIZONTAL: VERTICAL) AT INTERFACE WITH CONTAINMENT WALL.

1:1.5 (HORIZONTAL: VERTICAL) AT DOWNSTREAM END OF GROUTED RIPRAP (12 FT DOWNSTREAM OF CONTAINMENT WALL)

CONSTRUCT SMOOTH TRANSITIONS BETWEEN GIVEN SIDESLOPES

TOP OF RIPRAP ELEVATION VARIES AS FOLLOWS:

105.0 FT ELEV AT INTERFACE WITH CONTAINMENT WALL.

100.0 FT AT DOWNSTREAM END OF GROUTED RIPRAP (12 FT DOWNSTREAM OF CONTAINMENT WALL)

CONSTRUCT SMOOTH TRANSITION BETWEEN GIVEN ELEVATIONS

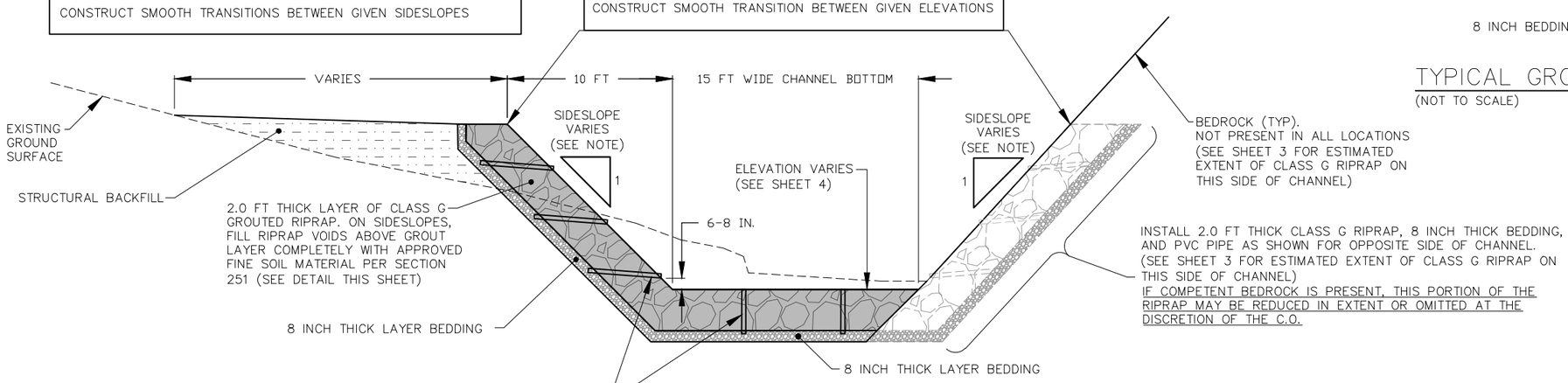

2" DIA. SCHEDULE 80 PIPE SET ON 3-FT GRID ON SIDESLOPES AND 6 FT GRID ON FLAT CHANNEL BOTTOM. USE HOSE CLAMPS TO SECURE GALVANIZED 10 SQUARE/INCH INSECT SCREEN TO THE END OF PIPE THAT IS EMBEDDED IN GRAVEL. EMBED SCREENED END 3-4 INCHES IN BEDDING GRAVEL. SLOPE PIPE SLIGHTLY TO DRAIN TO CREEK. PREVENT GROUT FROM ENTERING PIPE DURING GROUT INSTALLATION.

C/5 SECTION

CROSS SECTION THROUGH GROUTED RIPRAP

(NOT TO SCALE)

Sixteenmile Creek Fish Barrier

BARRIER SECTIONS B & C

Drawn by: DW Date: 04/02/13
Revised: ____ Date: _____

Sheet 5 of 11

NOTE: WHERE THE PRESENCE OF COMPETENT BEDROCK PREVENTS CONSTRUCTON OF WALL FOOTINGS, CONNECT WALLS DIRECTLY TO BEDROCK AS SHOWN ON SHEET 10

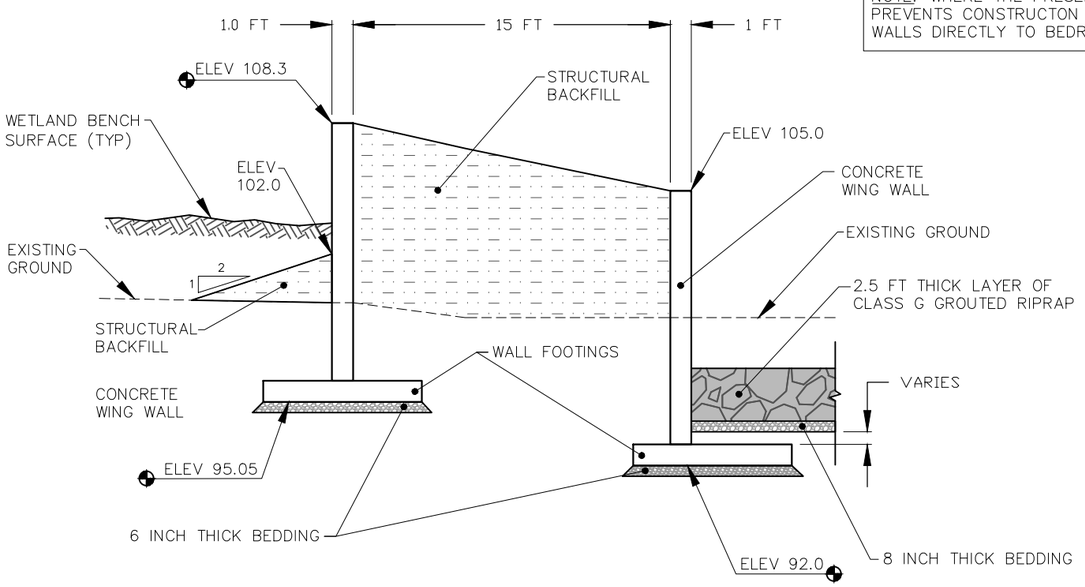

E / 6 SECTION
CROSS SECTION THROUGH CONTAINMENT WALLS
(NOT TO SCALE)

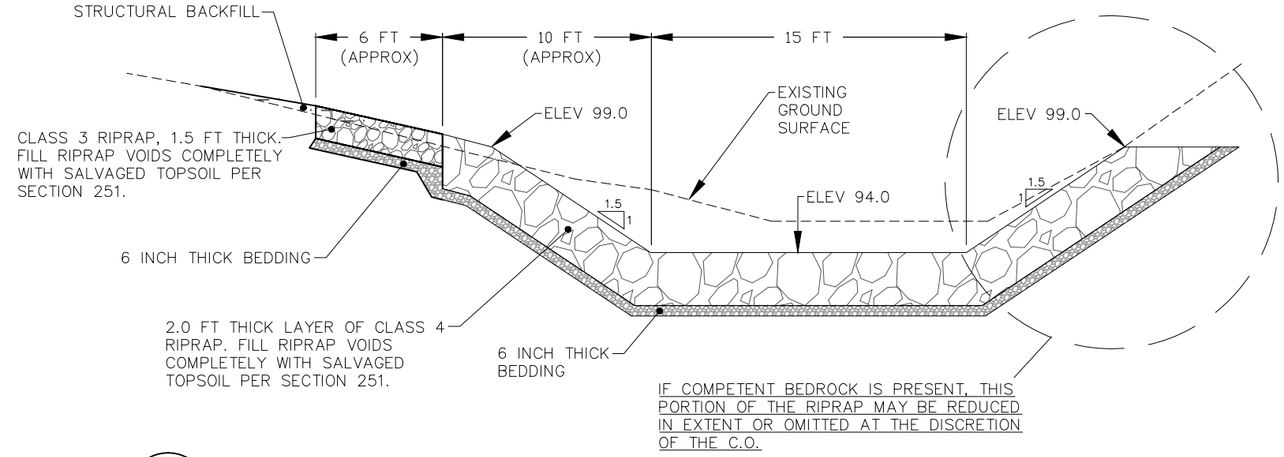

D / 6 SECTION
CROSS SECTION AT DOWNSTREAM END OF NON-GROUTED RIPRAP
(NOT TO SCALE)

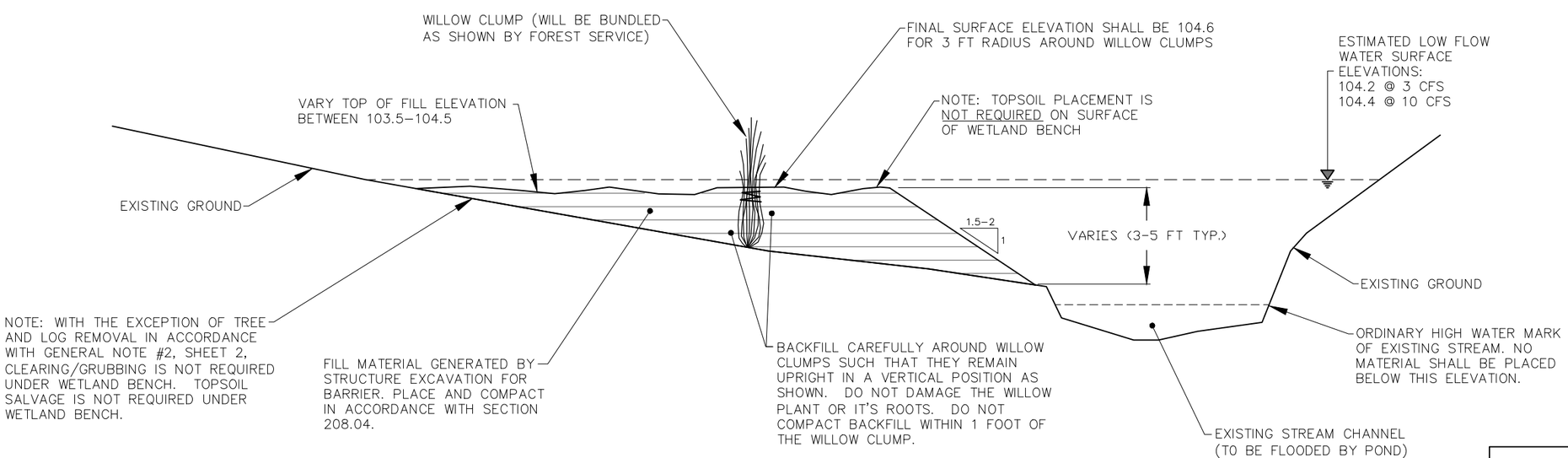

F / 6 SECTION
TYPICAL CROSS SECTION THROUGH WETLAND BENCH
(NOT TO SCALE)

Sixteenmile Creek Fish Barrier

BARRIER SECTIONS D & E AND SECTION F

Drawn by: DW Date: 04/02/13
Revised: ____ Date: _____

Sheet 6 of 11

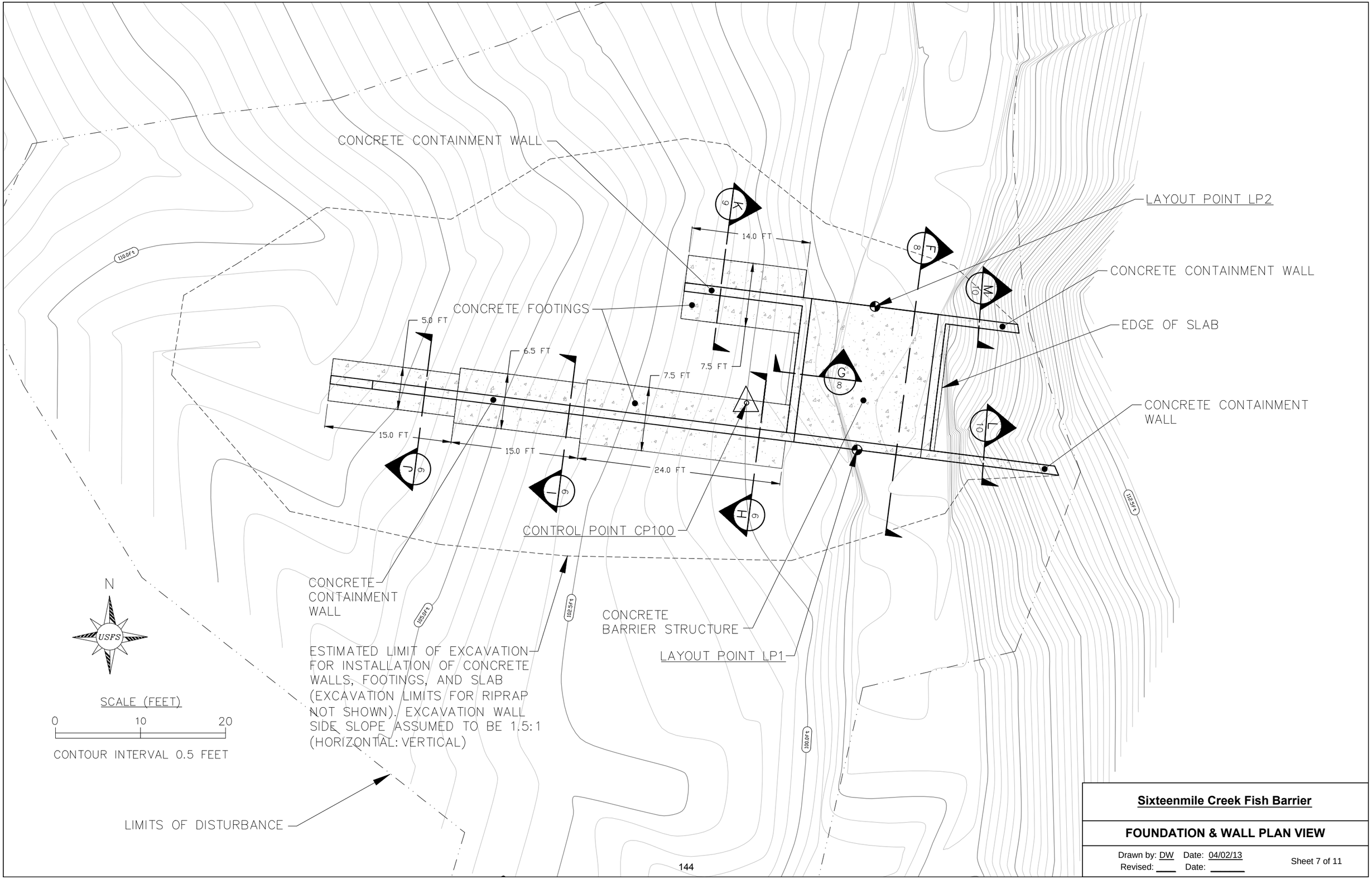

Sixteenmile Creek Fish Barrier

FOUNDATION & WALL PLAN VIEW

Drawn by: DW Date: 04/02/13
Revised: ____ Date: _____

Sheet 7 of 11

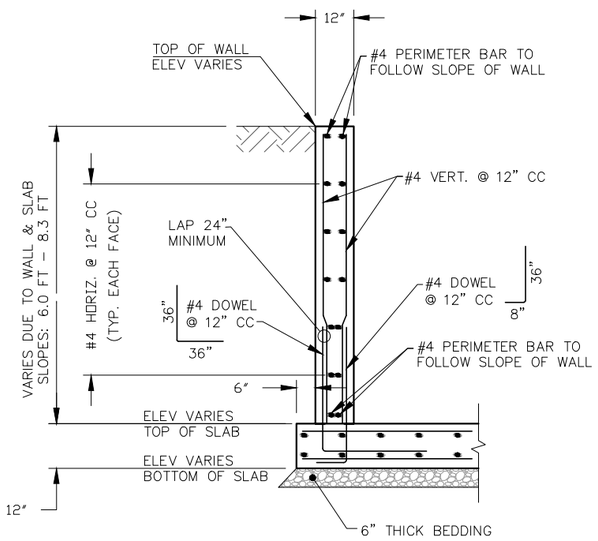

G/8 SECTION
BARRIER SIDEWALL
(NOT TO SCALE)

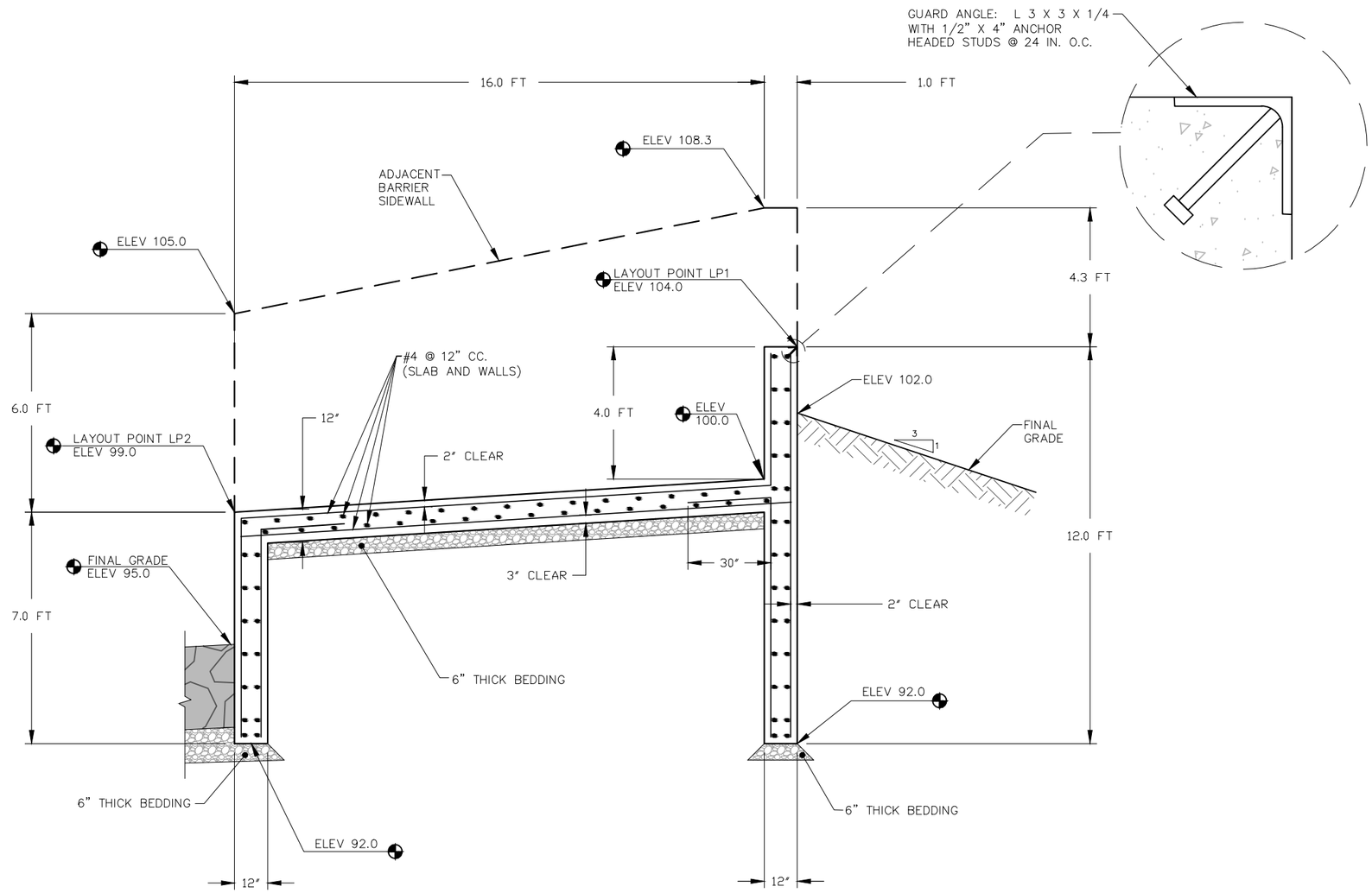

F/8 SECTION
FLOWLINE PROFILE THROUGH CONCRETE BARRIER STRUCTURE
(NOT TO SCALE)

STRUCTURAL NOTES

1. SPECIFICATIONS: CONSTRUCT THE PROJECT IN ACCORDANCE WITH FEDERAL HIGHWAY ADMINISTRATION STANDARD SPECIFICATIONS FOR CONSTRUCTION OF ROADS AND BRIDGES ON FEDERAL HIGHWAY PROJECTS (FP–03) AND APPLICABLE FOREST SERVICE SUPPLEMENTAL SPECIFICATIONS (FSSS).

2. CONCRETE: USE CLASS A(AE) OR CLASS D(AE) FOR ALL CAST–IN–PLACE CONCRETE. THE REQUIRED 28–DAY COMPRESSIVE STRENGTH (F'c) IS 4,000 PSI WITH AN ENTRAINED AIR CONTENT OF 5% +/– 1%. FINISH ALL EXPOSED CONCRETE WITH A CLASS 2–RUBBED FINISH. MAKE ALL CONCRETE IN ACCORDANCE WITH AN APPROVED MIX DESIGN. CHAMFER ALL EXPOSED EDGES OF CONCRETE 3/4" AND FILLET ALL ACUTE ANGLES 3" UNLESS OTHERWISE NOTED.

3. REINFORCING STEEL: USE REINFORCING STEEL OF THE DEFORMED TYPE CONFORMING TO AASHTO M31 (ASTM A615) GRADE 60. CUT AND BEND REINFORCING STEEL IN CONFORMANCE WITH ACI 315. LAP SPLICE BARS 2' MINIMUM.

4. COVER: CONCRETE COVER OVER REINFORCEMENT SHALL BE 2" CLEAR, EXCEPT FOR CONCRETE PLACED AGAINST AND PERMANENTLY IN CONTACT WITH EARTH SHALL BE 3" CLEAR.

5. HARDWARE AND STRUCTURAL STEEL. USE SHAPES, PLATES, AND BARS MEETING THE REQUIREMENTS OF ASTM A36, UNLESS OTHERWISE SPECIFIED IN THESE PLANS. USE HARDWARE MEETING THE REQUIREMENTS OF ASTM A325, EXCEPT AS NOTED ON THE PLANS.

6. WELDING: WELD IN ACCORDANCE WITH THE STRUCTURAL WELDING CODE, AWS D1.1. A CERTIFIED WELDER IS REQUIRED.

7. BEDROCK CONNECTION: ALL DIRECT CONNECTION BETWEEN STEEL REINFORCED CONCRETE COMPONENTS AND BEDROCK, INCLUDING BUT NOT LIMITED TO SURFACE PREPARATION, DRILLING, HOLE PREPARATION, AND REBAR INSTALLATION/ANCHORING, IS INCLUDED IN PAY ITEM 258–01.

Sixteenmile Creek Fish Barrier

BARRIER SECTIONS & STRUCTURAL NOTES

Drawn by: DW Date: 04/02/13
Revised: ____ Date: _____

Sheet 8 of 11

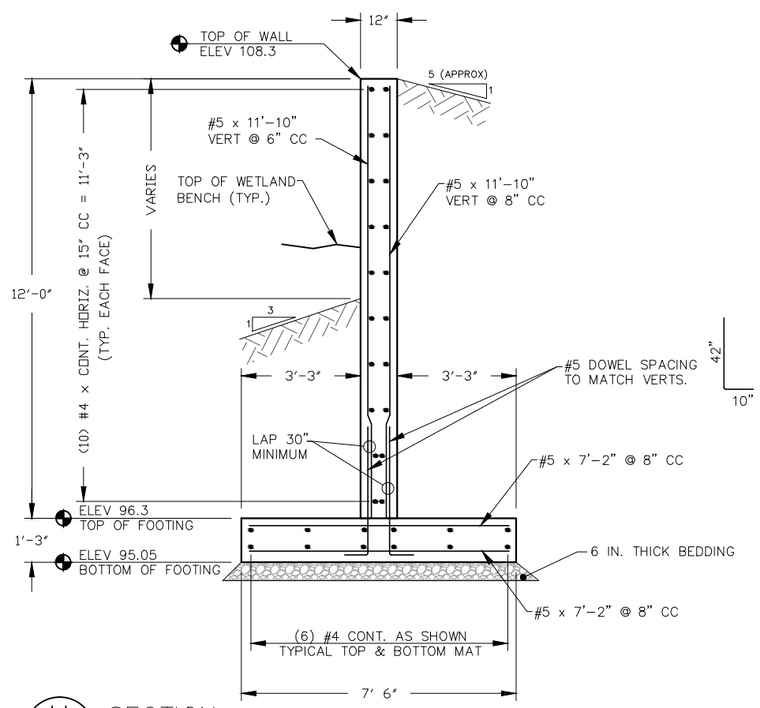

H / 9 SECTION
UPSTREAM CONTAINMENT WALL, 7.5 FT WIDE FOOTING
(NOT TO SCALE)

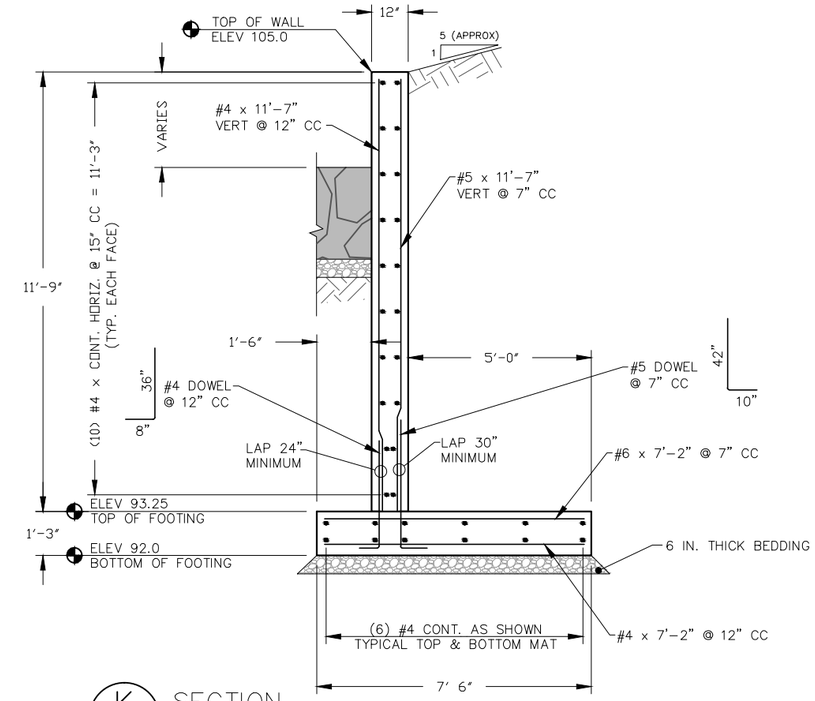

K / 9 SECTION
DOWNSTREAM CONTAINMENT WALL
(NOT TO SCALE)

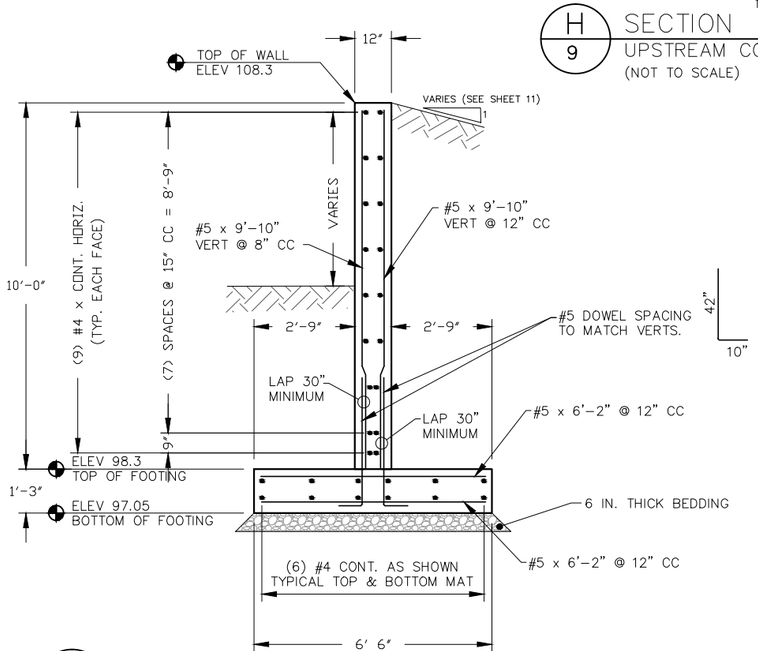

I / 9 SECTION
UPSTREAM CONTAINMENT WALL, 6.5 FT WIDE FOOTING
(NOT TO SCALE)

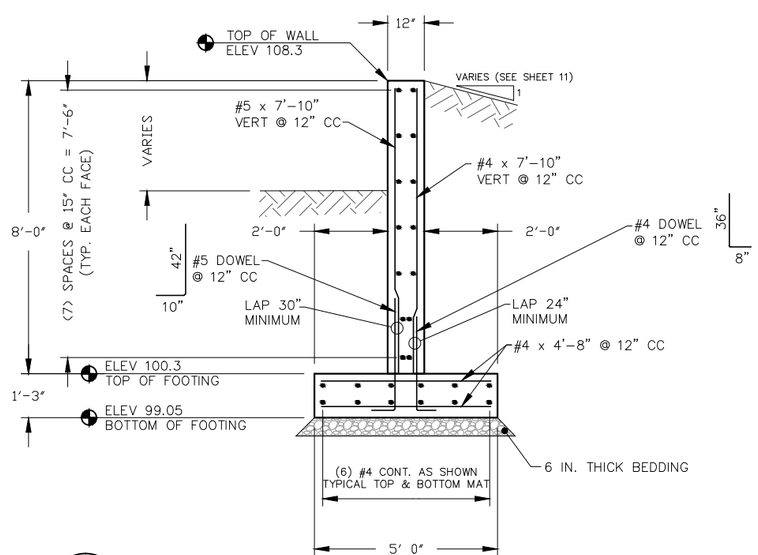

J / 9 SECTION
UPSTREAM CONTAINMENT WALL, 5.0 FT WIDE FOOTING
(NOT TO SCALE)

Sixteenmile Creek Fish Barrier

WALL SECTIONS

Drawn by: DW Date: 04/02/13
Revised: ____ Date: _____

Sheet 9 of 11

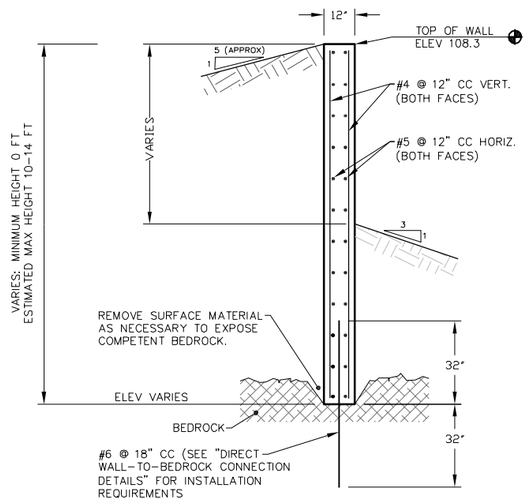

L/10 SECTION
UPSTREAM CONTAINMENT WALL,
DIRECT CONNECTION TO BEDROCK
(NOT TO SCALE)

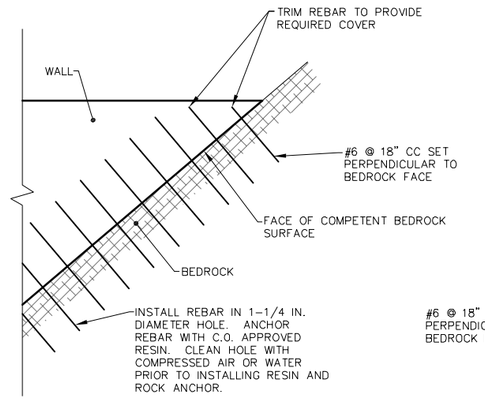

BEDROCK TO WALL ATTACHMENT PROFILE

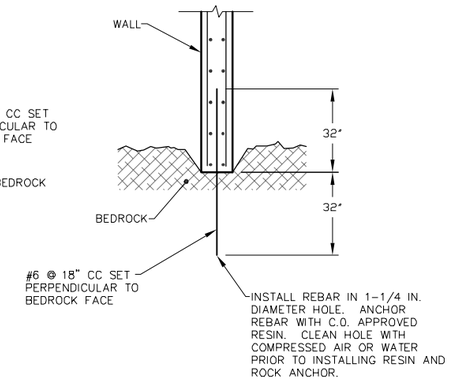

BEDROCK TO WALL ATTACHMENT SECTION

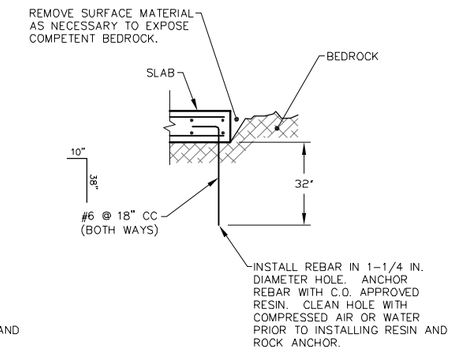

BEDROCK TO SLAB ATTACHMENT

DIRECT WALL-TO-BEDROCK CONNECTION DETAILS
APPLIES WHERE BEDROCK IS ENCOUNTERED
(NOT TO SCALE)

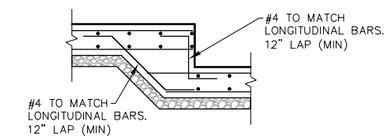

FOOTING STEP DETAIL
(NOT TO SCALE)

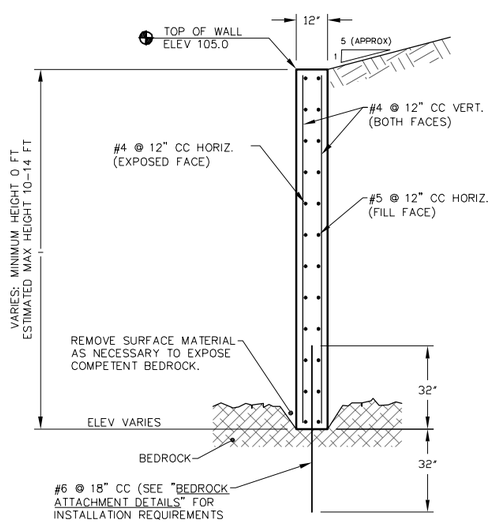

M/10 SECTION
DOWNSTREAM CONTAINMENT WALL, DIRECT CONNECTION TO BEDROCK
(NOT TO SCALE)

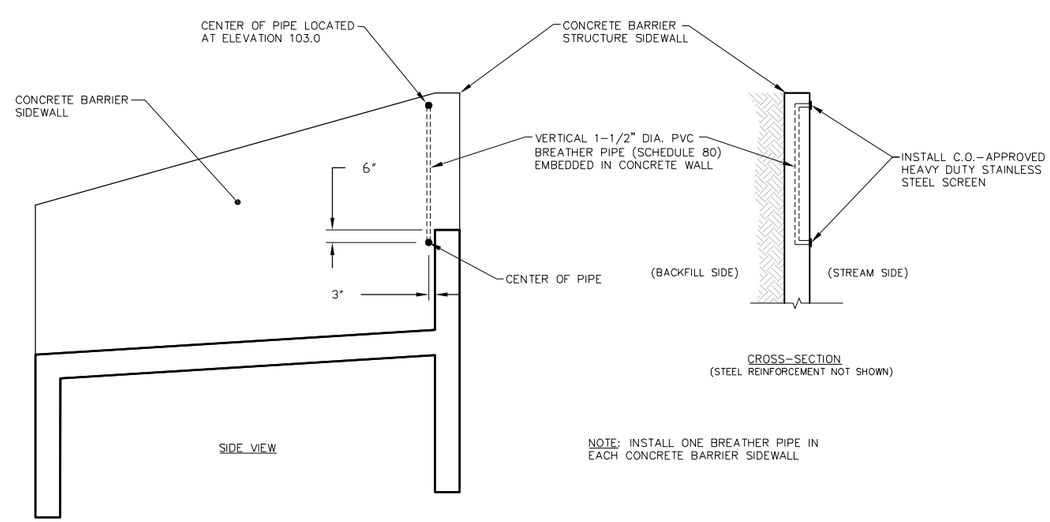

NOTE: INSTALL ONE BREATHER PIPE IN
EACH CONCRETE BARRIER SIDEWALL

BREATHER PIPE DETAILS
(NOT TO SCALE)

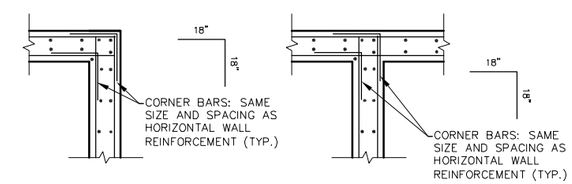

CORNER INTERSECTION

TYPICAL FOOTING AND WALL CORNER BARS
APPLY TO ALL CORNERS
(NOT TO SCALE)

Sixteenmile Creek Fish Barrier

WALL SECTIONS & CONCRETE DETAILS

Drawn by: DW Date: 04/02/13
Revised: ____ Date: _____

Sheet 10 of 11

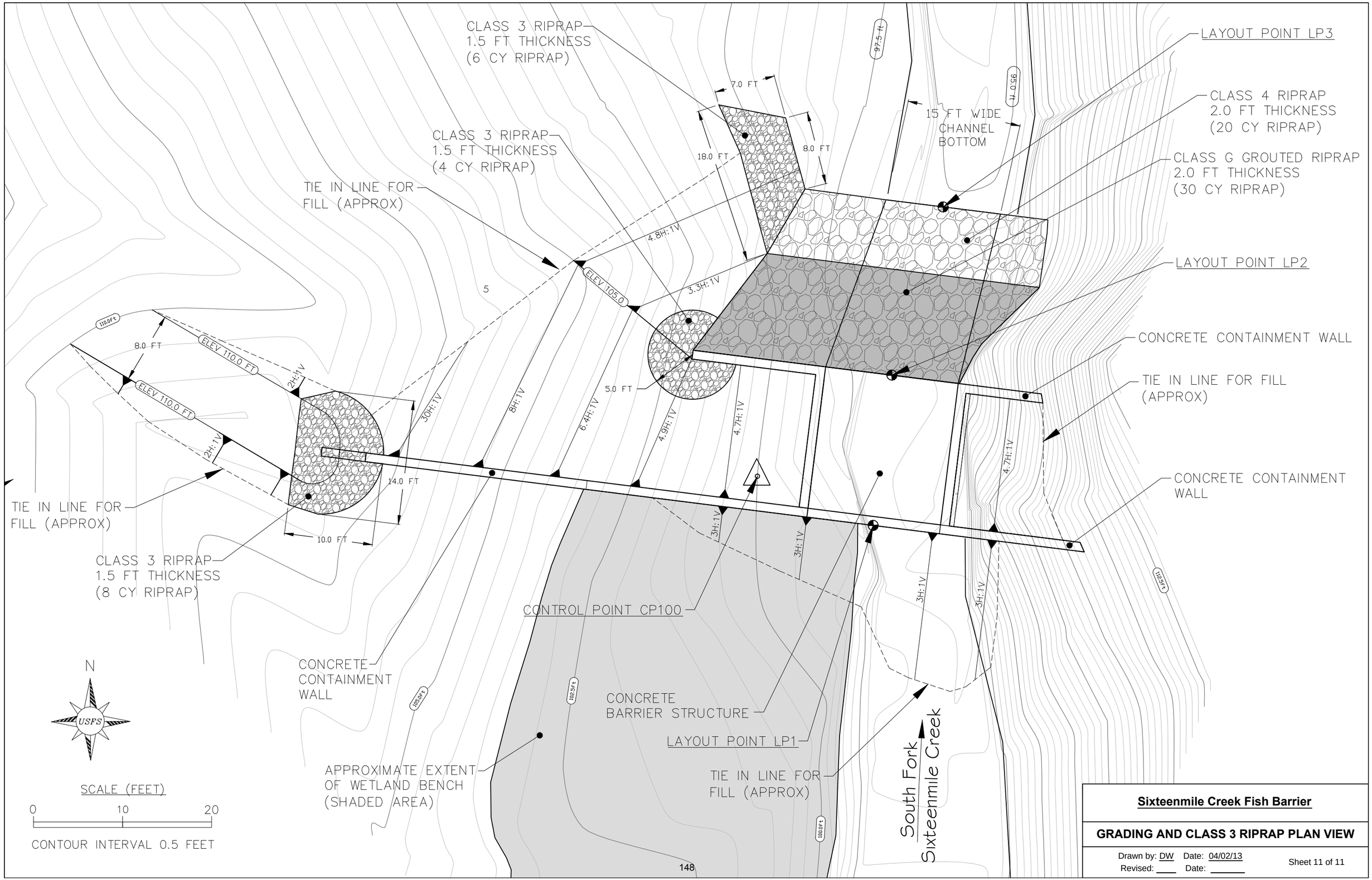

Sixteenmile Creek Fish Barrier

GRADING AND CLASS 3 RIPRAP PLAN VIEW

Drawn by: DW Date: 04/02/13
Revised: ____ Date: _____

Sheet 11 of 11