# CONSTRUCTION PLANS FOR SPOKANE SIPHON FISHERIES ENHANCEMENT PROJECT FWP PROJECT NO. 12-23 NEAR WISDOM, BEAVERHEAD COUNTY, MONTANA

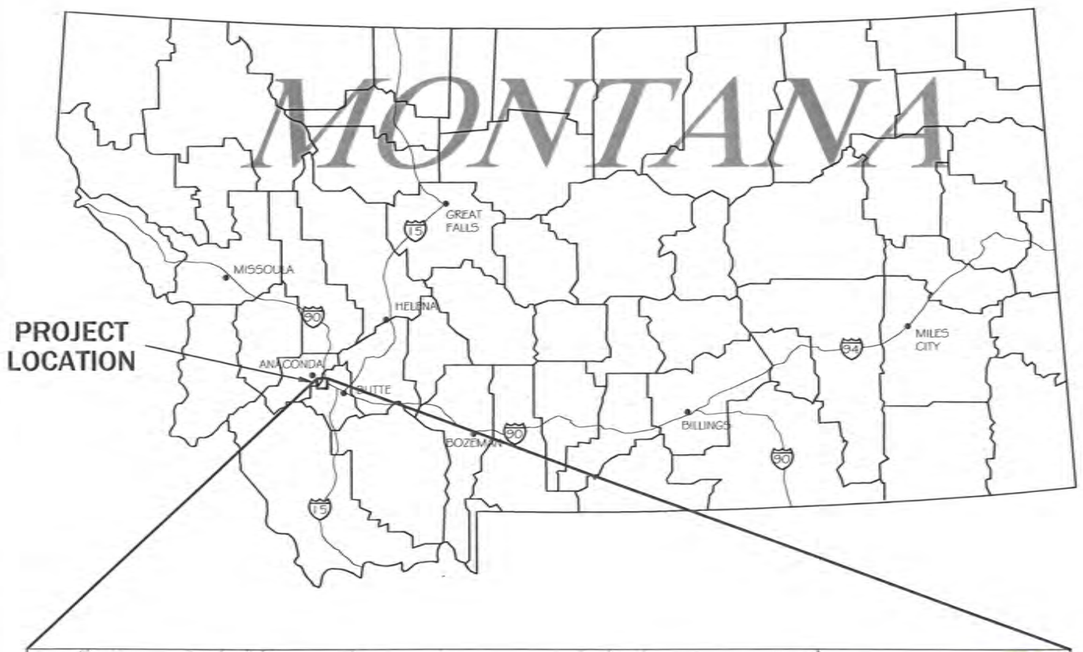


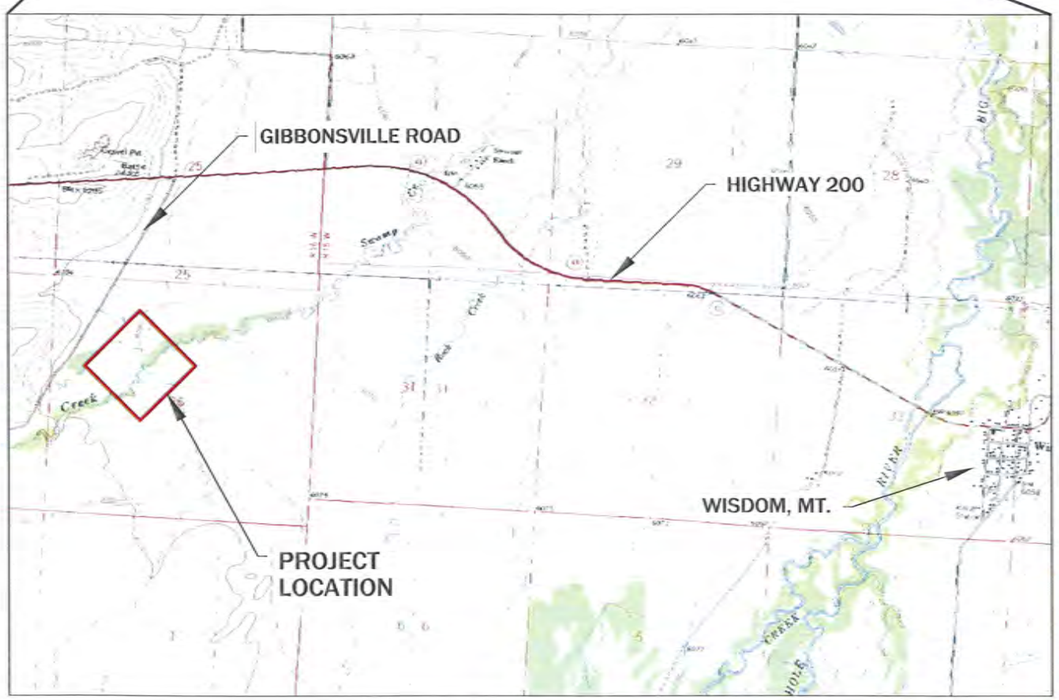


SITE VICINITY MAP

SECTION 36, T2S, R16W

45° 37' 07" N 113° 31' 32" W

PREPARED FOR

Montana Fish, Wildlife & Parks

OWNER: ERB LIVESTOCK AND J. HIRSCHY

COOPERATING AGENCIES- MONTANA FWP, MONTANA DNRC, AND US FISH & WILDLIFE SERVICE

PREPARED BY

PIONEER TECHNICAL SERVICES, INC.

JULY, 2012

MONTANA A. COLT WISE 13718PE LICENSED PROFESSIONAL ENGINEER 7-17-12

STRUCTURAL

SHEET INDEX


| | |
|---|---|
| | **SECTION 1 GENERAL** |
| 1-1 | TITLE SHEET |
| 1-2 | LEGEND AND ESTIMATED MATERIALS |
| 1-3 | EXISTING SITE PLAN |
| 1-4 | PROPOSED SITE PLAN |
| | **SECTION 2 SIPHON** |
| 2-1 | PLAN & PROFILE |
| 2-2 | DETAILS |
| 2-3 | DETAILS |
| 2-4 | DETAILS |
| 2-5 | DETAILS |
| | **SECTION 3 SWAMP CREEK** |
| 3-1 | PLAN & PROFILE |
| 3-2 | DETAILS |
| 3-3 | DETAILS |
| 3-4 | DETAILS |
| 3-5 | DETAILS |
| | **SECTION 4 EARTHWORK** |
| 4-1 | SITE GRADING PLAN |
| 4-2 | SWAMP CREEK PLAN & PROFILE |
| 4-3 | DIVERSION CHANNEL PLAN & PROFILE |
| 4-4 | SPOKANE SIPHON OVERFLOW CHANNEL PLAN & PROFILE |
| 4-5 | SPOKANE DITCH GRADING PLAN & PROFILE |
| 4-6 | SECTIONS AND DETAILS |


APPROVED FOR CONSTRUCTION

SIGNATURE 7-17-12 DATE

CERTIFICATION BY ENGINEER

MONTANA GEORGE E. AUSTIGUY 9528PE REGISTERED PROFESSIONAL ENGINEER 7-17-12

SHEET 1-1

7/13/2012 10:19:25 AM P:\HELENADATA\FWP\SPOKANESIPHON2012\CAD\SECTION 1\SPOKANE-DE-TTL-001-12.DWG

## LEGEND

6550 — EXISTING INDEX CONTOURS

EXISTING INTERMEDIATE CONTOURS

STREAM CENTERLINE

EXISTING TEXT

PROPOSED TEXT

PROPOSED INDEX CONTOURS

PROPOSED INTERMEDIATE CONTOURS

0+50 1+00 1+50 — ALLIGNMENT

5 / 1 — SLOPE DESIGNATION

PROPERTY LINE

TYPE 1 RIPRAP

GROWTH MEDIA

TYPE A GEOTEXTILE

TYPE B GEOTEXTILE

TYPE 1 CONCRETE

TYPE A FILL

TYPE B FILL

TYPE C FILL

COMPACTED SUBGRADE

### DETAIL INDICATOR

1 / 7 — DETAIL NUMBER; SHEET NUMBER ON WHICH DETAIL APPEARS

ON PLAN

DETAIL 1 / 7 — DETAIL NUMBER; SHEET NUMBER ON WHICH PLAN APPEARS.

AT DETAIL

### SECTION INDICATOR

A / 1 — SECTION DESIGNATION; SHEET NUMBER ON WHICH SECTION APPEARS

ON PLAN

SECTION A–A / 7 — SECTION DESIGNATION; SHEET NUMBER ON WHICH PLAN APPEARS.

AT SECTION DETAIL

APPROVED FOR CONSTRUCTION

| Estimated Materials | |
|---|---|
| | |
| **Item** | **Amount** |
| Concrete | 145 CY |
| Unclassified Excavation (included A Horizon) | 4,195 CY |
| Type C- Fill | 5,165 CY |
| Type B Fill | 85 CY |
| Riprap | 86 CY |
| Trash Rack | 1 Each |
| 63" Dia, DR 32.5 HDPE | 150 LF |
| Parshall Flume and Staff Gauge | 1 Each |
| Aluminum Slide Gate/w Screw | 1 Each |
| Denil Fish Ladder | 1 Each |
| Doug Fir Check Boards | 96 Bd.Ft. |
| | |

**Note: All values are Engineer's Estimate, Contractor is responsible for determining Bid Quantities.**

## GENERAL NOTES

1. CONTRACTOR TO FURNISH AND INSTALL 2' THROAT x 3' DEPTH PASHALL FLUME WITH UPSTREAM AND DOWNSTREAM GAUGES ON SWAMP CREEK DIVERSION CHANNEL.
2. PARSHALL FLUME AS FABRICATED BY TRUE NORTH STEEL, BILLINGS, MT., OR ENGINEER APPROVED EQUIVALENT.
3. CONTRACTOR TO FURNISH AND INSTALL STAFF GAUGE ON SWAMP CREEK DIVERSION - CHECK STRUCTURE.
4. CONTRACTOR TO FURNISH AND INSTALL 2' x 3' DENIL FISH LADDER AS FABRICATED BY BITTERROOT WELDING, MISSOULA, MT. OR ENGINEER APPROVED EQUIVALENT.

REVISION:

| DATE: | BY: | DESC: |
|---|---|---|
| --- | --- | --- |
| --- | --- | --- |
| --- | --- | --- |
| --- | --- | --- |
| --- | --- | --- |

DRAWN BY: ECO
DESIGNED BY: CLM
CHECKED BY: GEA
APPROVED BY: GEA
PROJECT NO: 16822
DATE: 7-12

DISPLAYED AS:
COORD SYS/ZONE: MSP
DATUM: NAD83
UNITS: INT. FEET
SOURCE: PIONEER

SCALE IN FEET
0

MONTANA FISH, WILDLIFE & PARKS
WISDOM, MT.
SPOKANE SIPHON

LEGEND AND ESTIMATED MATERIALS

PIONEER TECHNICAL SERVICES, INC.
201 E. BROADWAY, SUITE C
HELENA, MONTANA 59601
(406) 457-8252

SHEET 1-2

## CONTROL POINT TABLE

| POINT# | EASTING | NORTHING | POINT ELEV. | DESCRIPTION |
|---|---|---|---|---|
| 1 | 936614.0920 | 524090.9850 | 6109.913 | CP1 5-8 RB-FNC-TRIANGLE |
| 2 | 939218.9410 | 525355.7380 | 6091.245 | CP-2 |
| 3 | 939213.1280 | 525561.0970 | 6090.663 | CP3-5 5/8-RB |
| | | | | |

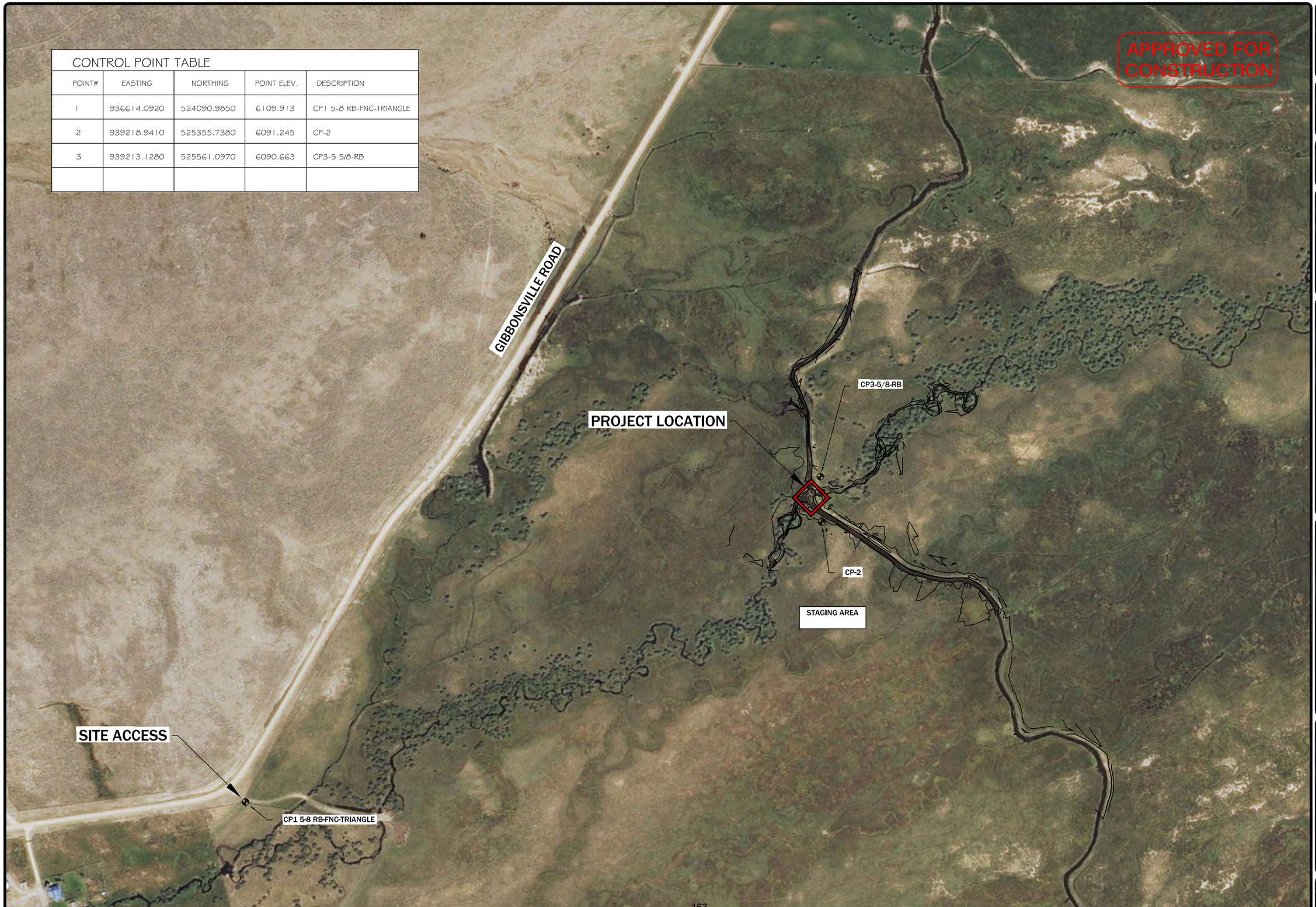


REVISION:

| DATE: | BY: | DESC: |
|---|---|---|
| | | |

DRAWN BY: ECO
DESIGNED BY: CLM
CHECKED BY: GEA
APPROVED BY: GEA
PROJECT NO: 16822
DATE: 7-12

DISPLAYED AS:
COORD SYS/ZONE: MSP
DATUM: NAD83
UNITS: INT. FEET
SOURCE: PIONEER

N

SCALE IN FEET
0 200 400

MONTANA FISH, WILDLIFE & PARKS
WISDOM, MT.
SPOKANE SIPHON

EXISTING SITE PLAN
SPOKANE SIPHON

PIONEER TECHNICAL SERVICES, INC.
201 EAST BROADWAY
HELENA, MONTANA 59601
(406) 457-8252

SHEET
1-3



7/17/2012 11:27:44 AM P:\HELENADATA\FWP\SPOKANESIPHON2012\CAD\SECTION 1\SPOKANE-DE-PLN-001-12.DWG

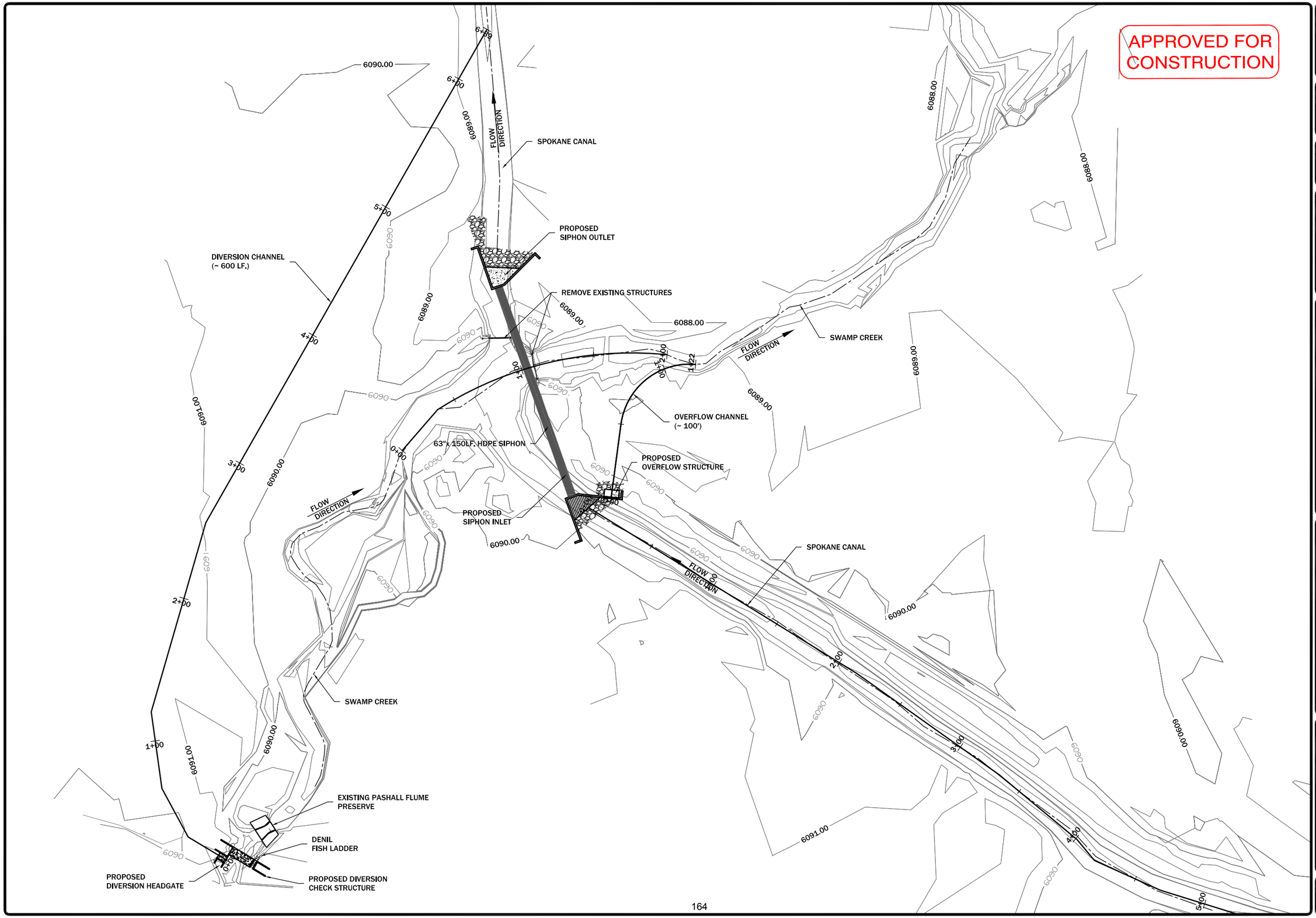


REVISION:

| DATE: | BY: | DESC: |
|---|---|---|
| | | |

DRAWN BY: ECO
DESIGNED BY: CLM
CHECKED BY: GEA
APPROVED BY: GEA
PROJECT NO: 16822
DATE: 7-12

DISPLAYED AS:
COORD SYS/ZONE: MSP
DATUM: NAD83
UNITS: INT. FEET
SOURCE: PIONEER

N

SCALE IN FEET
0 30 60

MONTANA FISH, WILDLIFE & PARKS
WISDOM, MT.
SPOKANE SIPHON

PROPOSED SITE PLAN
SPOKANE SIPHON

PIONEER TECHNICAL SERVICES, INC.
201 EAST BROADWAY
HELENA, MONTANA 59601
(406) 457-8252

SHEET
1-4



7/16/2012 11:18:33 AM P:\HELENADATA\FWP\SPOKANESIPHON2012\CAD\SECTION 1\SPOKANE-DE-PLN-002-12.DWG

APPROVED FOR CONSTRUCTION

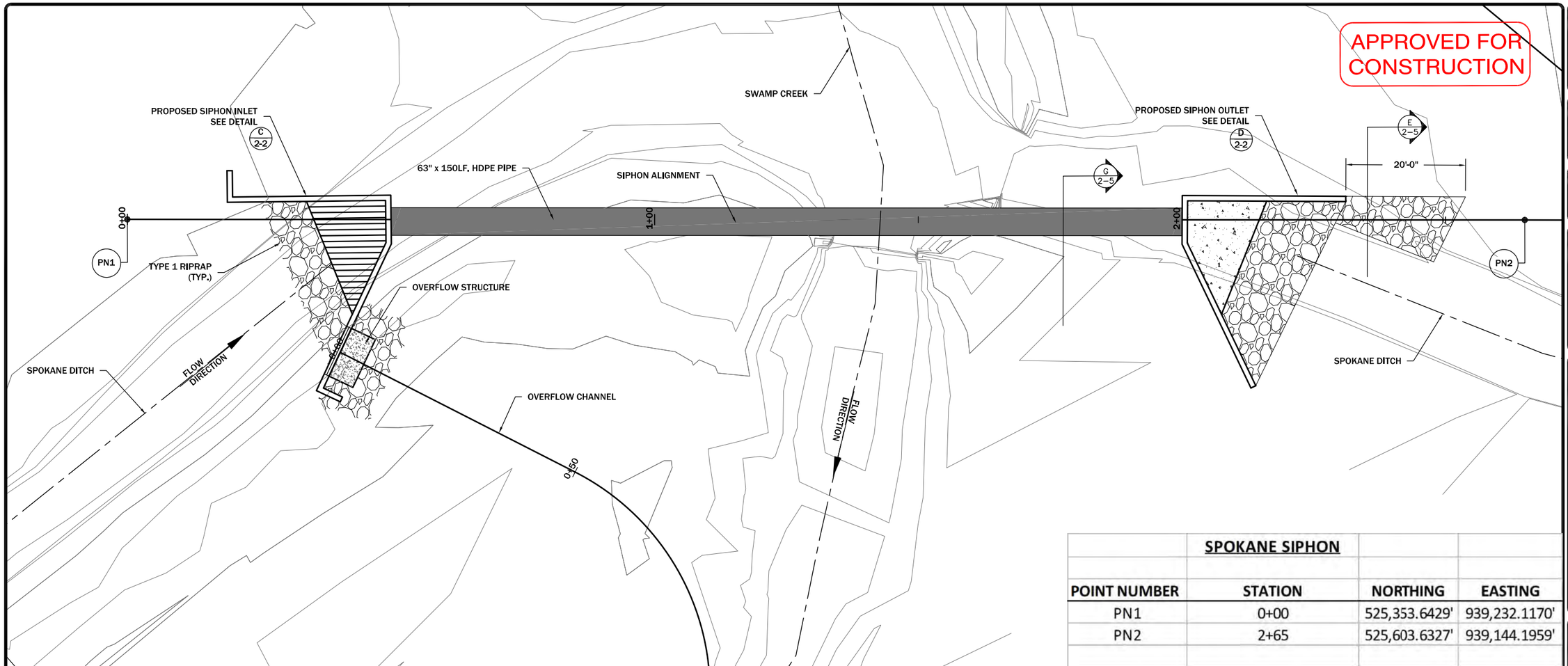


## SPOKANE SIPHON

| POINT NUMBER | STATION | NORTHING | EASTING |
|---|---|---|---|
| PN1 | 0+00 | 525,353.6429' | 939,232.1170' |
| PN2 | 2+65 | 525,603.6327' | 939,144.1959' |

PRIOR TO PLACING CONCRETE FOR HEADWALLS, BACKFILL PIPE FULL LENGTH TO WITHIN 10' OF WALLS.

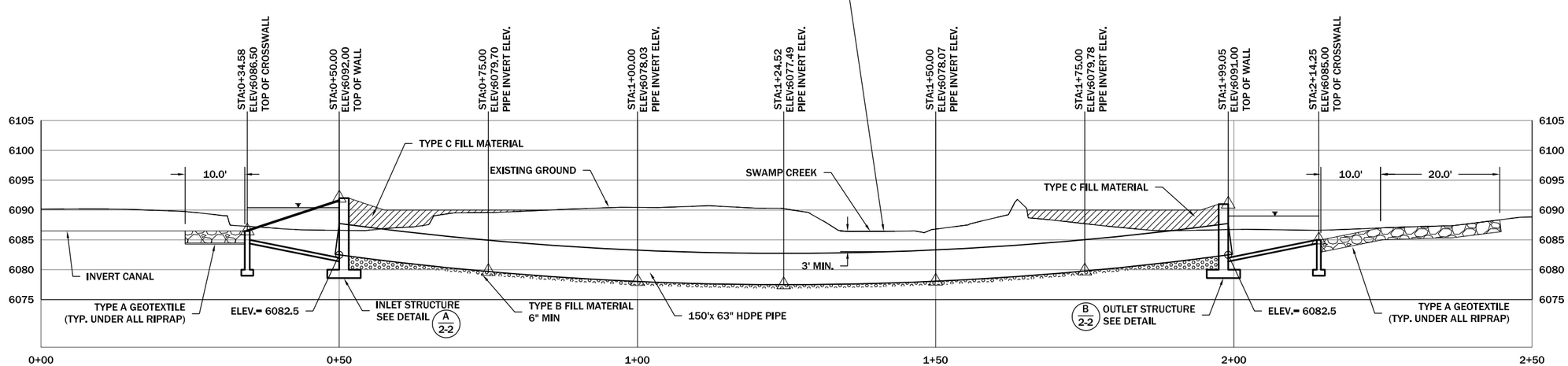


REVISION:

| DATE: | BY: | DESC: |
|---|---|---|
| | | |

DRAWN BY: ECO
DESIGNED BY: CLM
CHECKED BY: GEA
APPROVED BY: GEA
PROJECT NO: 16822
DATE: 7-12

DISPLAYED AS:
COORD SYS/ZONE: MSP
DATUM: NAD83
UNITS: INT. FEET
SOURCE: PIONEER

SCALE IN FEET
0 10 20

MONTANA FISH, WILDLIFE & PARKS
WISDOM, MT.

# PLAN & PROFILE
# SPOKANE DITCH SIPHON

PIONEER TECHNICAL SERVICES, INC.
201 EAST BROADWAY
HELENA, MONTANA 59601
(406) 457-8252

SHEET
2-1



7/16/2012 11:58:53 AM P:\HELENADATA\FWP\SPOKANESIPHON2012\CAD\SECTION 2\SPOKANE-DE-PLP-001-12.DWG

APPROVED FOR CONSTRUCTION

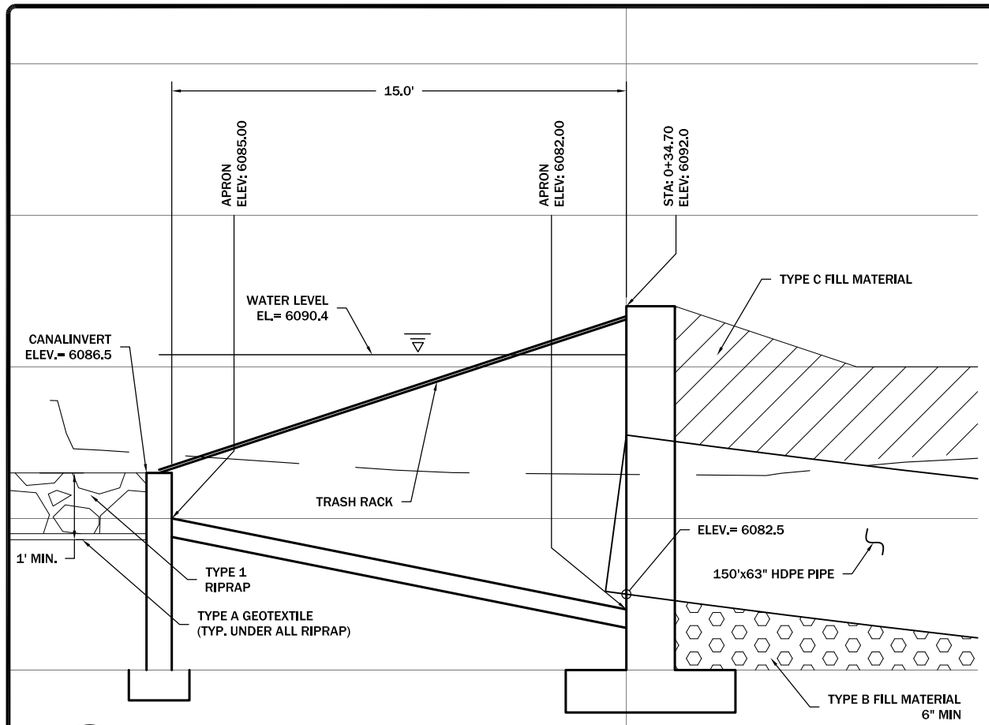


A 2-1 **INLET SECTION** 1"=5'

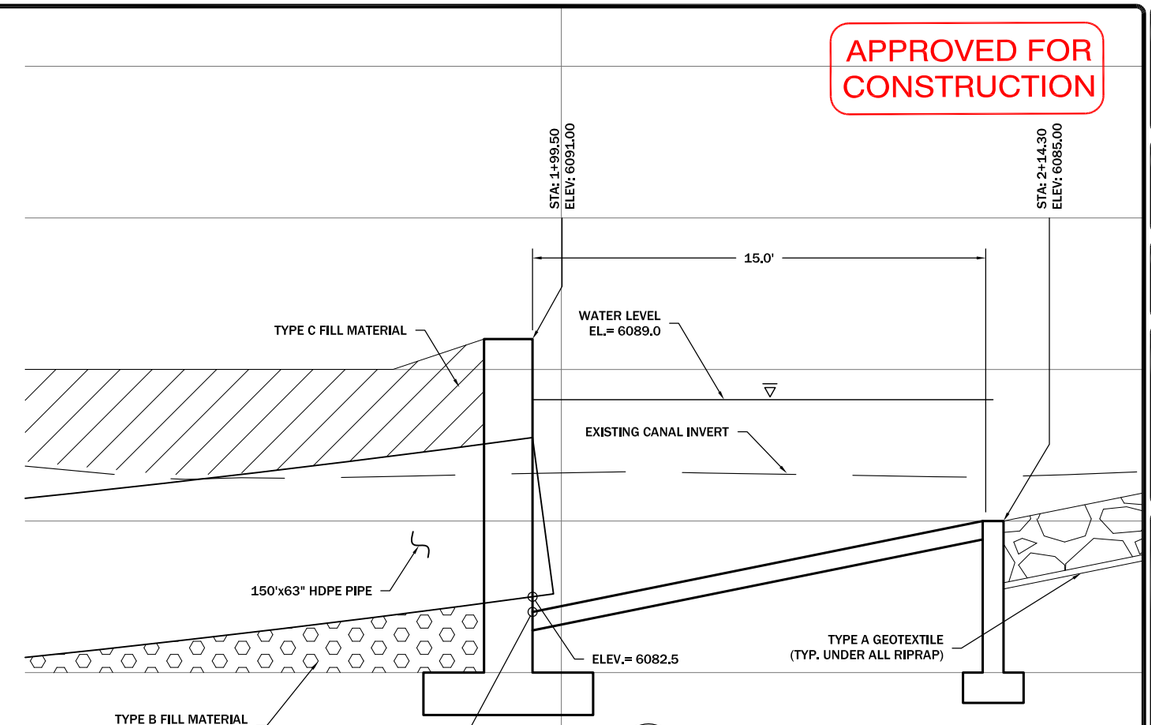


B 2-1 **OUTLET SECTION** 1"=5'

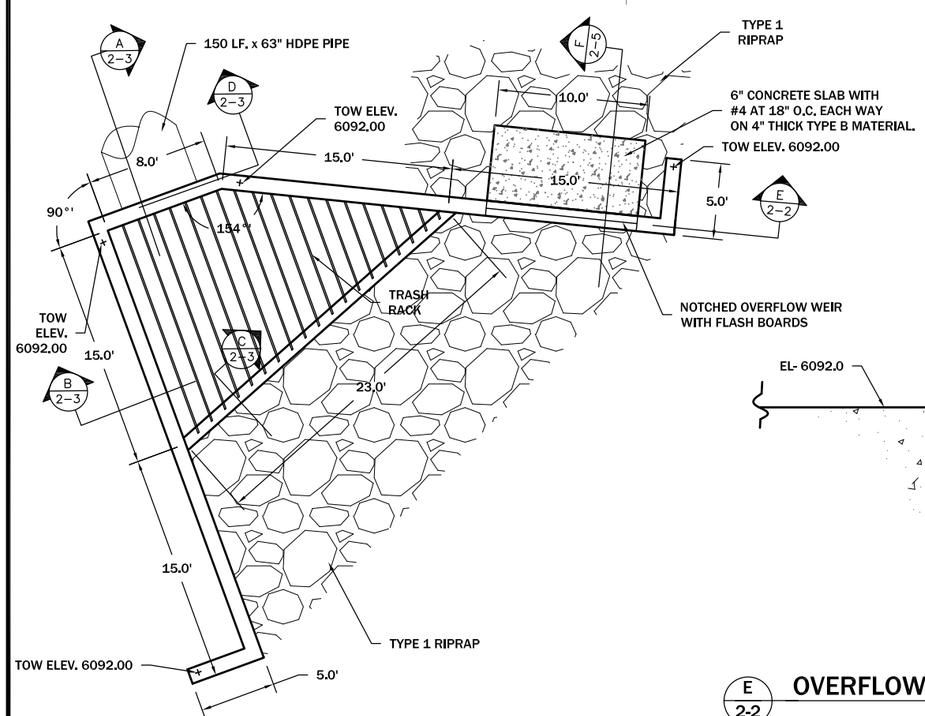


C 2-1 **PLAN VIEW INLET** 1"=10'

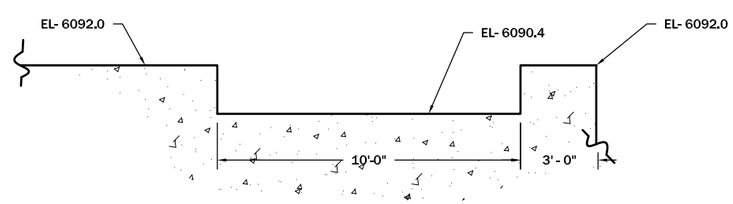


E 2-2 **OVERFLOW WEIR SECTION** 1"=5'

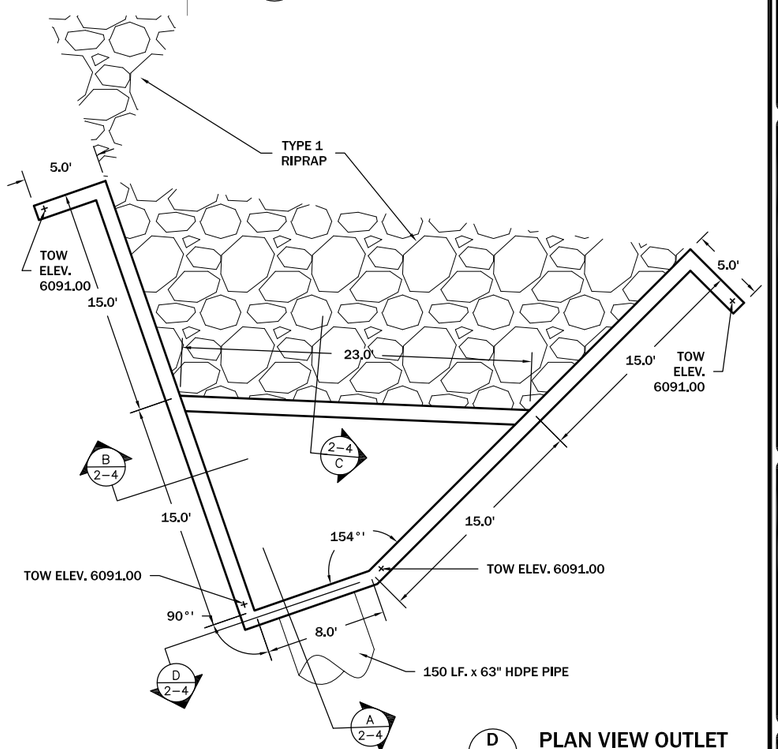


D 2-1 **PLAN VIEW OUTLET** 1"=10'

REVISION:

| DATE: | BY: | DESC: |
|---|---|---|
| | | |

DRAWN BY: ECO
DESIGNED BY: CLM
CHECKED BY: GEA
APPROVED BY: GEA
PROJECT NO: 16822
DATE: 7-12

DISPLAYED AS:
COORD SYS/ZONE: MSP
DATUM: NAD83
UNITS: INT. FEET
SOURCE: PIONEER

SCALE IN FEET
0

MONTANA FISH, WILDLIFE & PARKS
SPOKANE SIPHON
WISDOM, MT.

INLET / OUTLET DETAILS

PIONEER TECHNICAL SERVICES, INC.
201 EAST BROADWAY
HELENA, MONTANA 59601
(406) 457-8252

SHEET 2-2



7/16/2012 12:13:54 PM P:\HELENADATA\FWP\SPOKANESIPHON2012\CAD\SECTION 2\SPOKANE-DE-DET-002-12.DWG

APPROVED FOR CONSTRUCTION

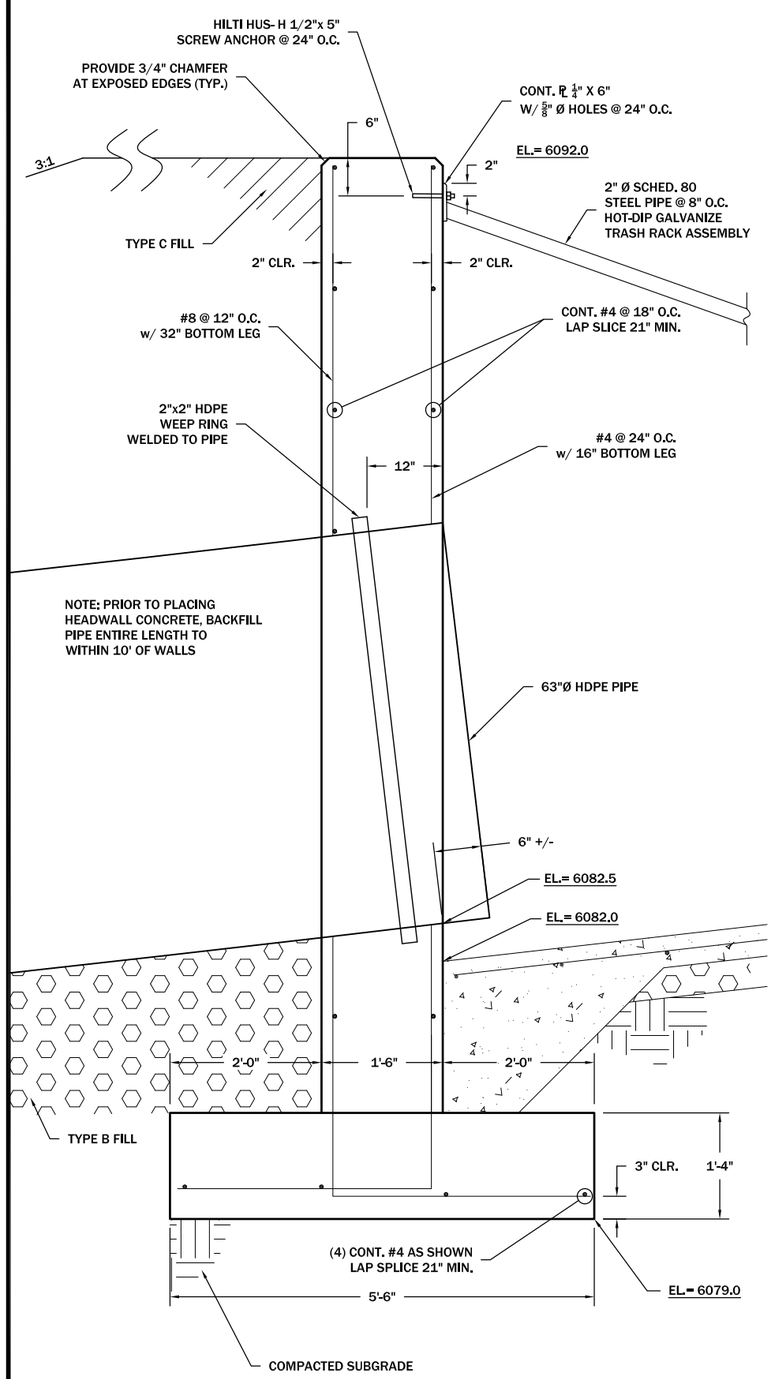


A 2-2 **HEADWALL TYPICAL SECTION**
1/2"=1'-0"

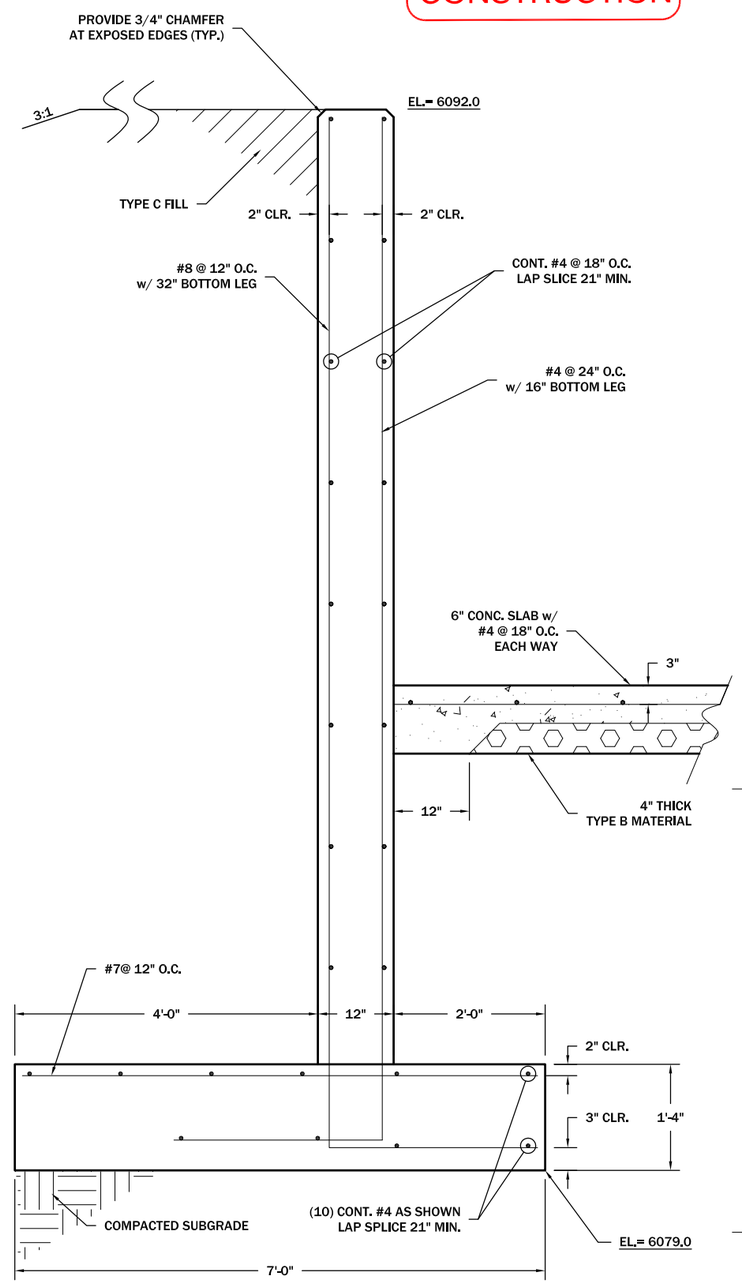


B 2-2 **WINGWALL TYPICAL SECTION**
1/2"=1'-0"

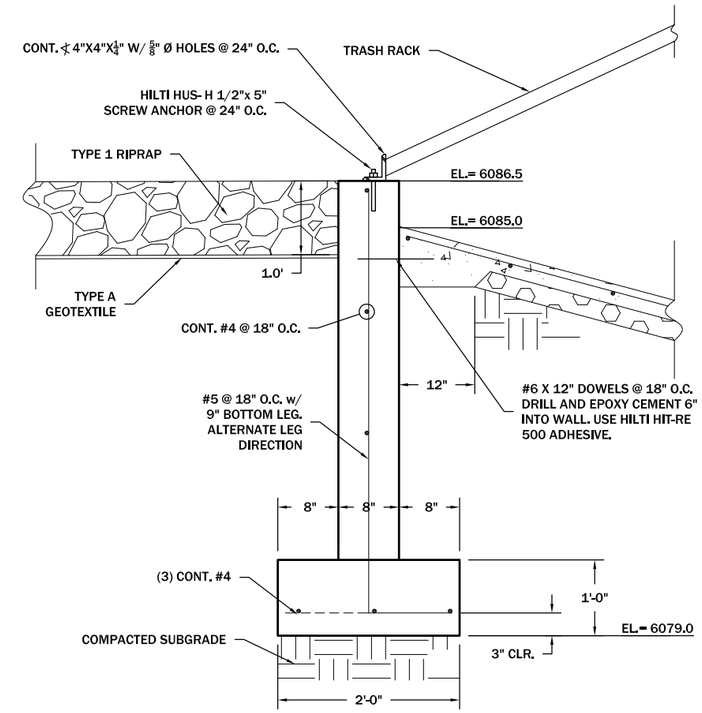


C 2-2 **CROSS WALL TYPICAL SECTION**
1/2"=1'-0"

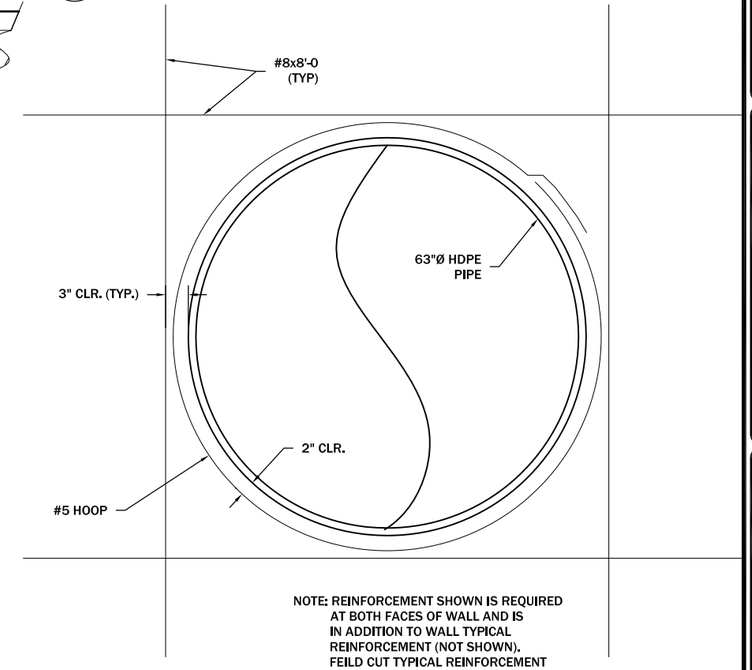


NOTE: REINFORCEMENT SHOWN IS REQUIRED AT BOTH FACES OF WALL AND IS IN ADDITION TO WALL TYPICAL REINFORCEMENT (NOT SHOWN). FEILD CUT TYPICAL REINFORCEMENT AROUND PIPE.

D 2-2 **PIPE OPENING REINFORCEMENT**
1/2"=1'-0"

| REVISION: DATE: | BY: | DESC: |
|---|---|---|
| | | |

DRAWN BY: ECO
DESIGNED BY: ACW
CHECKED BY: ACW
APPROVED BY: GEA
PROJECT NO: 16822
DATE: 7-12

DISPLAYED AS:
COORD SYS/ZONE: MSP
DATUM: NAD83
UNITS: IFT.
SOURCE: PIONEER

SCALE IN FEET
0

MONTANA FISH, WILDLIFE & PARKS
SPOKANE SIPHON
WISDOM, MT.

DETAILS
SIPHON INLET STRUCTURE

PIONEER TECHNICAL SERVICES, INC.
201 EAST BROADWAY
HELENA, MONTANA 59601
(406) 457-8252

SHEET 2-3



7/16/2012 12:32:47 PM P:\HELENADATA\FWP\SPOKANESIPHON2012\CAD\SECTION 2\SPOKANE-DE-DET-003-12 IN.DWG

APPROVED FOR CONSTRUCTION

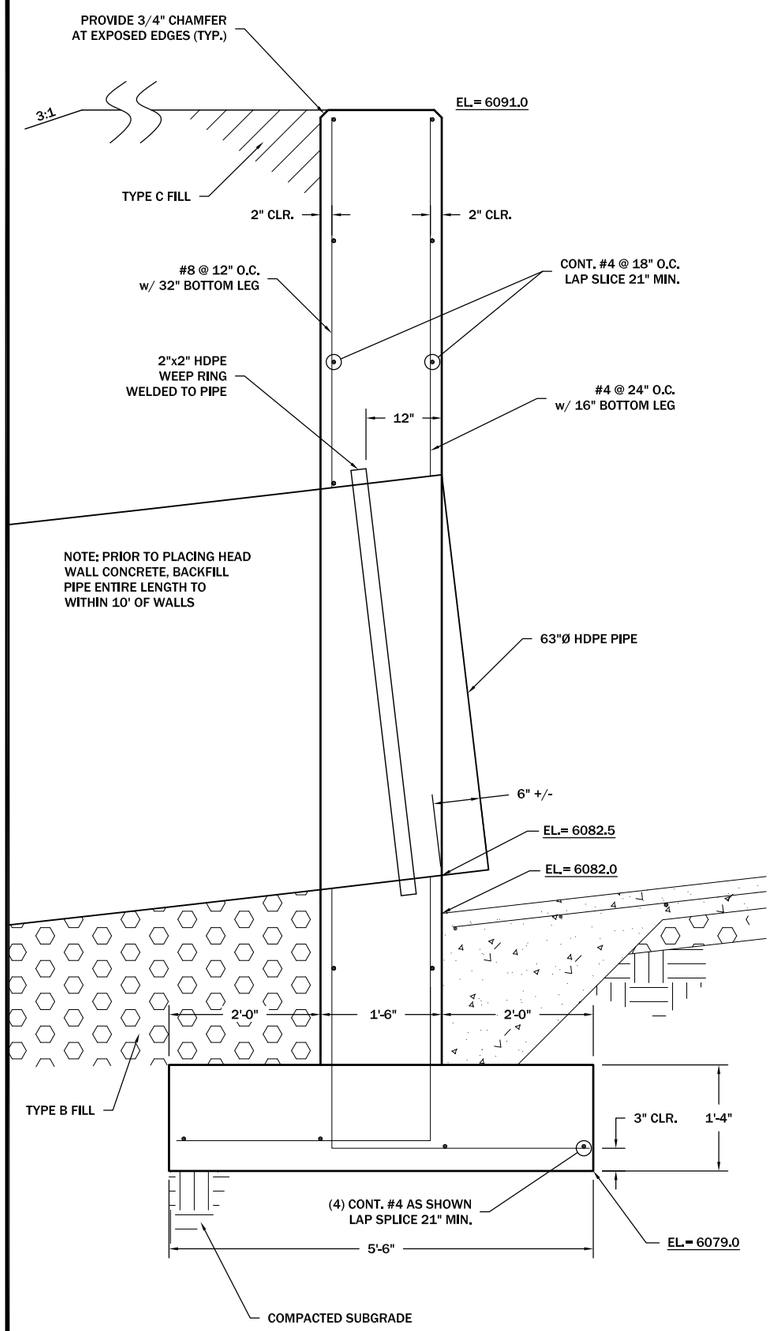


A 2-2 **HEADWALL TYPICAL SECTION**
1/2"=1'-0"

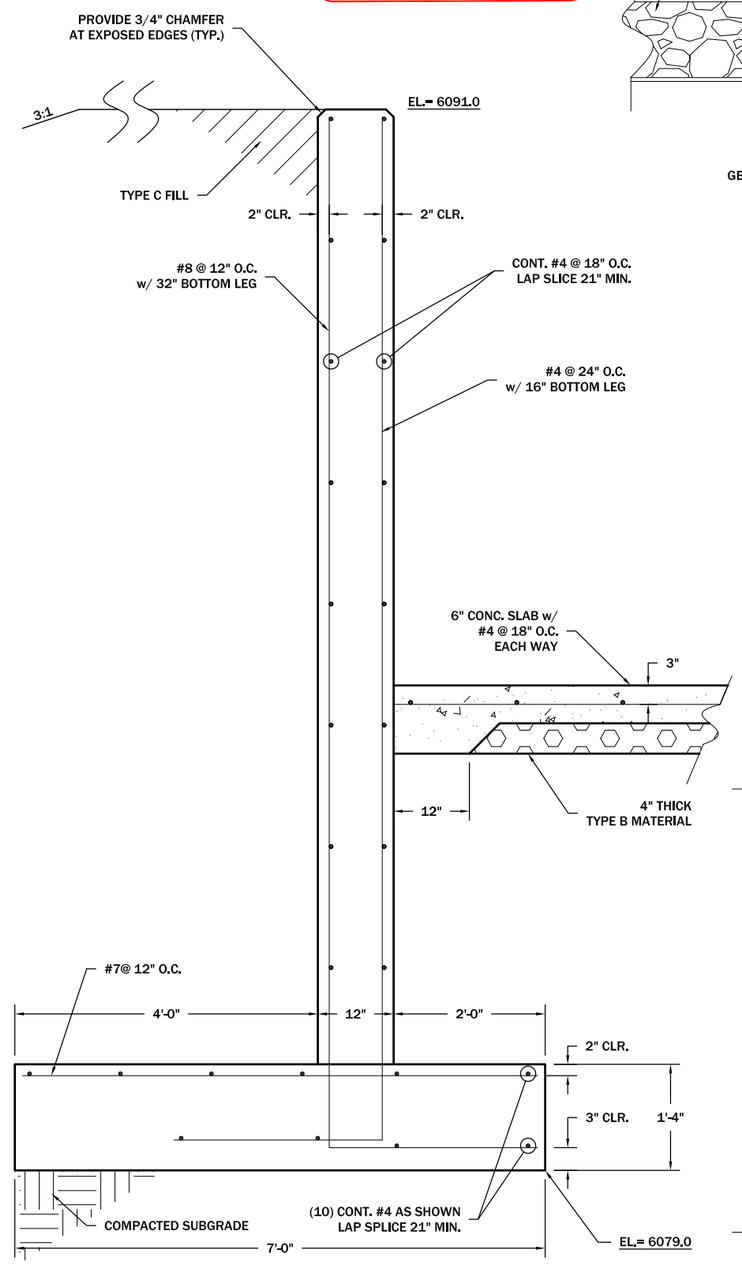


B 2-2 **WINGWALL TYPICAL SECTION**
1/2"=1'-0"

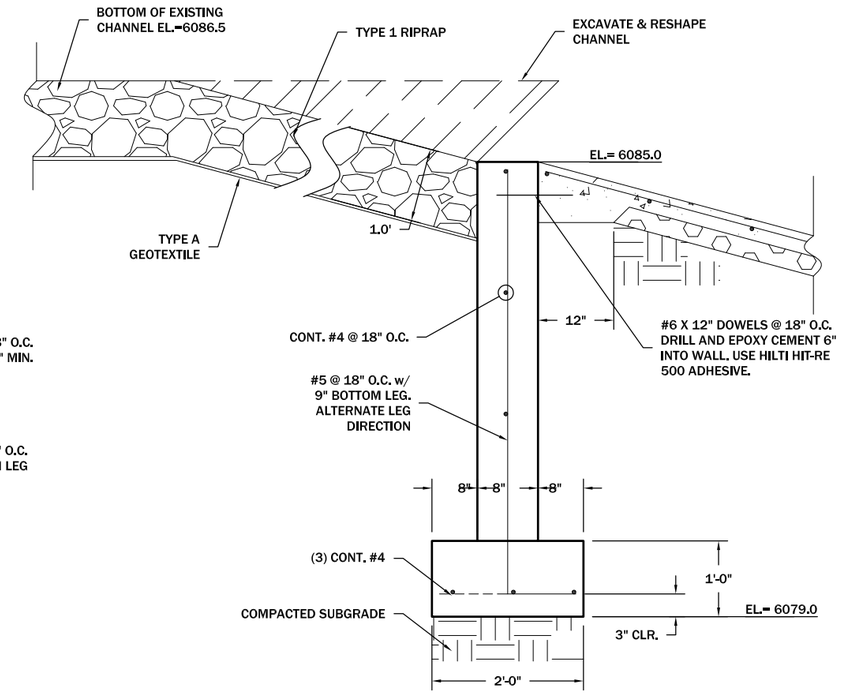


C 2-2 **CROSS WALL TYPICAL SECTION**
1/2"=1'-0"

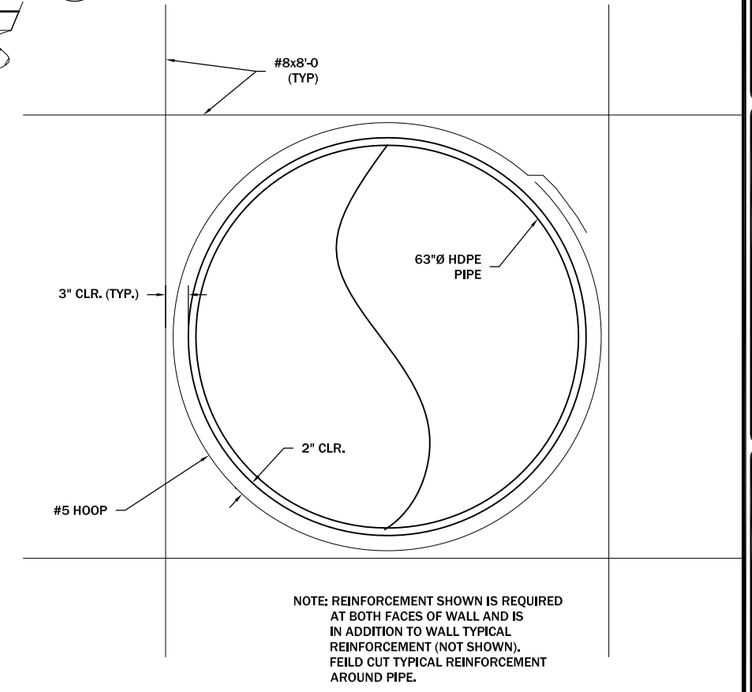


D 2-2 **PIPE OPENING REINFORCEMENT**
1/2"=1'-0"

REVISION:

| DATE: | BY: | DESC: |
|---|---|---|
| | | |

DRAWN BY: ECO
DESIGNED BY: ACW
CHECKED BY: ACW
APPROVED BY: GEA
PROJECT NO: 16822
DATE: 7-12

DISPLAYED AS:
COORD SYS/ZONE: MSP
DATUM: NAD83
UNITS: IFT.
SOURCE: PIONEER

SCALE IN FEET
0

MONTANA FISH, WILDLIFE & PARKS
SPOKANE SIPHON
WISDOM, MT.

DETAILS
SIPHON OUTLET STRUCTURE

PIONEER TECHNICAL SERVICES, INC.
201 EAST BROADWAY
HELENA, MONTANA 59601
(406) 457-8252

SHEET 2-4

APPROVED FOR CONSTRUCTION

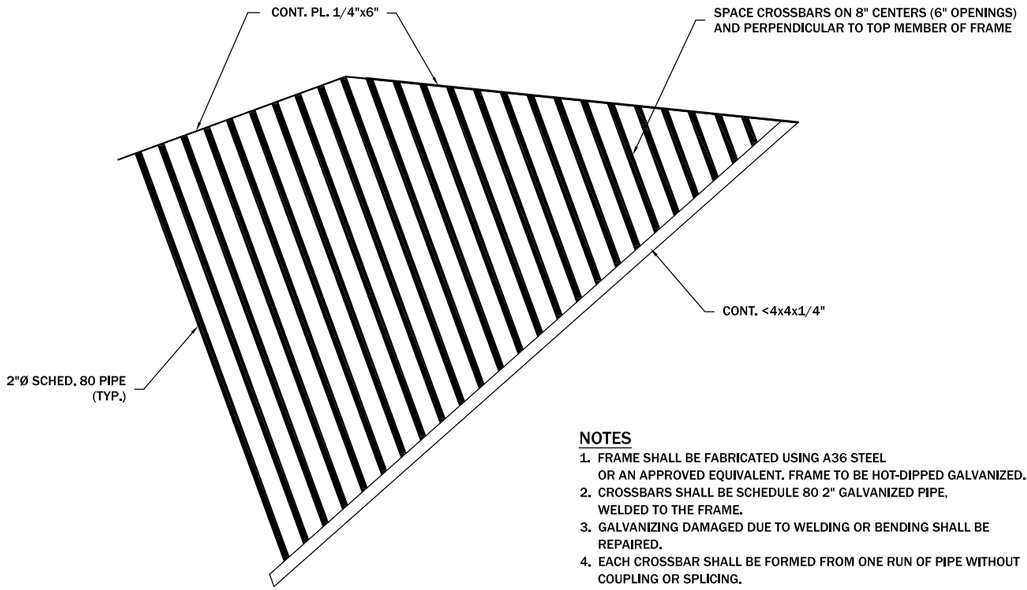


## NOTES

1. FRAME SHALL BE FABRICATED USING A36 STEEL OR AN APPROVED EQUIVALENT. FRAME TO BE HOT-DIPPED GALVANIZED.
2. CROSSBARS SHALL BE SCHEDULE 80 2" GALVANIZED PIPE, WELDED TO THE FRAME.
3. GALVANIZING DAMAGED DUE TO WELDING OR BENDING SHALL BE REPAIRED.
4. EACH CROSSBAR SHALL BE FORMED FROM ONE RUN OF PIPE WITHOUT COUPLING OR SPLICING.
5. FIRST AND LAST BAR SHALL BE PLACED ≤ 7" ON CENTER FROM WING WALLS
6. SEE DETAILS ON SHEET 2-3 FOR MORE INFORMATION.

## TRASH RACK DETAIL

1"=5'

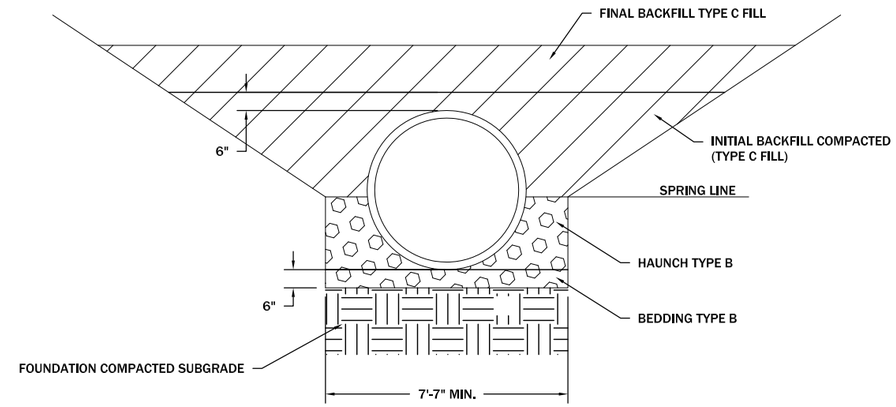


G 2-1 **TYPICAL SIPHON SECTION**

1"=5'

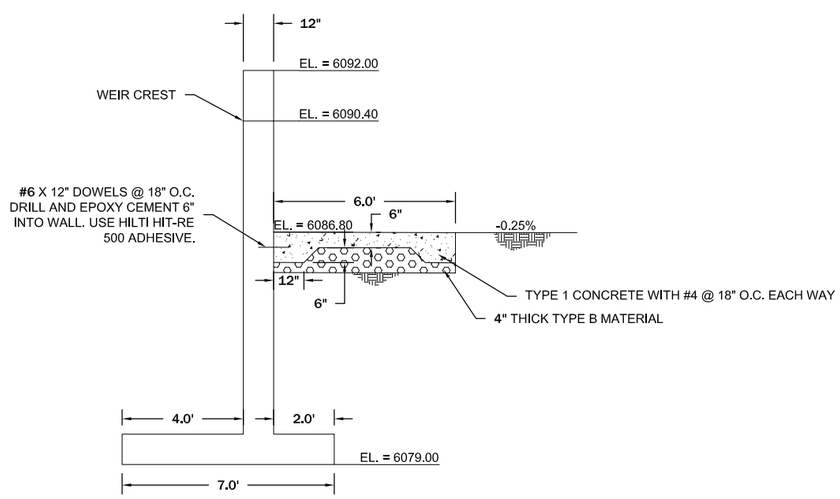


F 2-2 **OVERFLOW WEIR PROFILE**

1" = 5'

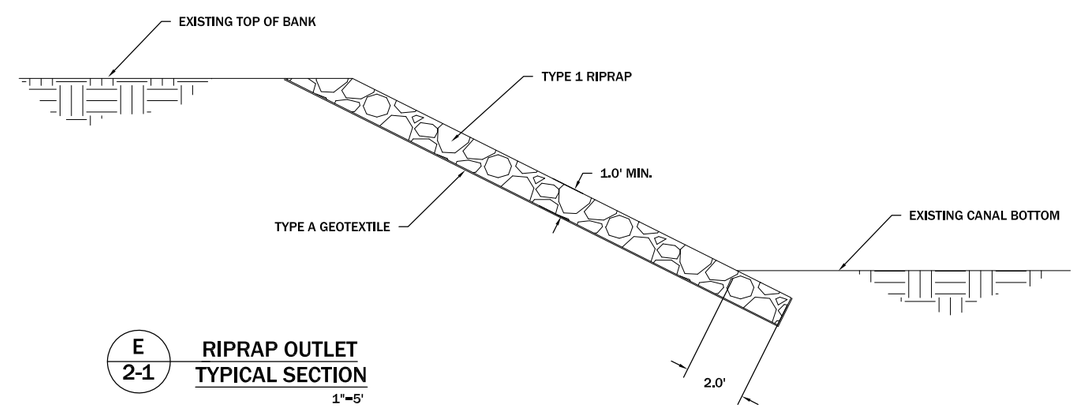


E 2-1 **RIPRAP OUTLET TYPICAL SECTION**

1"=5'

REVISION:

| DATE: | BY: | DESC: |
|---|---|---|
| | | |

DRAWN BY: ECO
DESIGNED BY: CLM
CHECKED BY: GEA
APPROVED BY: GEA
PROJECT NO: 16822
DATE: 7-12

DISPLAYED AS:
COORD SYS/ZONE: MSP
DATUM: NAD83
UNITS: INT. FEET
SOURCE: PIONEER

SCALE IN FEET
0 5

MONTANA FISH, WILDLIFE & PARKS
WISDOM, MT.

DETAILS
SPOKANE DITCH SIPHON

PIONEER TECHNICAL SERVICES, INC.
201 EAST BROADWAY
HELENA, MONTANA 59601
(406) 457-8252

SHEET 2-5

## NOTES:

1. 2' x 3' DENIL FISH LADDER AS MANUFACTURED BY BITTERFOOT WELDING, MISSOULA, MT., OR ENGINEER APPROVED EQUIVALENT.

APPROVED FOR CONSTRUCTION

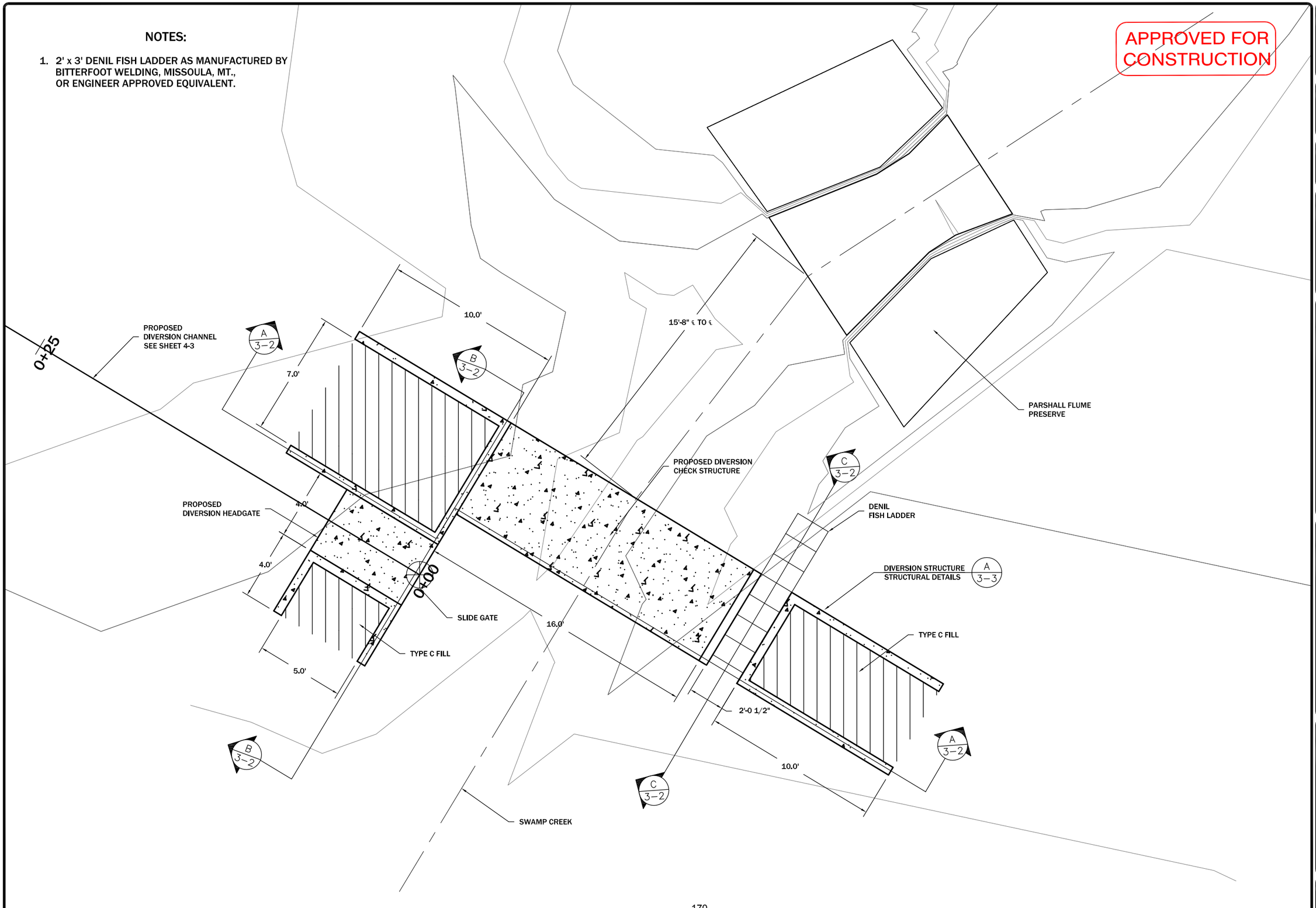


| REVISION: DATE: | BY: | DESC: |
|---|---|---|
| | | |

DRAWN BY: ECO
DESIGNED BY: CLM
CHECKED BY: GEA
APPROVED BY: GEA
PROJECT NO: 16822
DATE: 7-12

DISPLAYED AS:
COORD SYS/ZONE: MSP
DATUM: NAD83
UNITS: INT. FEET
SOURCE: PIONEER

N

SCALE IN FEET
0 5

MONTANA FISH, WILDLIFE & PARKS
WISDOM, MT.
SPOKANE SIPHON

PLAN VIEW
DIVERSION HEADGATE
DIVERSION CHECK STRUCTURE
SWAMP CREEK

PIONEER TECHNICAL SERVICES, INC.
201 EAST BROADWAY
HELENA, MONTANA 59601
(406) 457-8252

SHEET 3-1

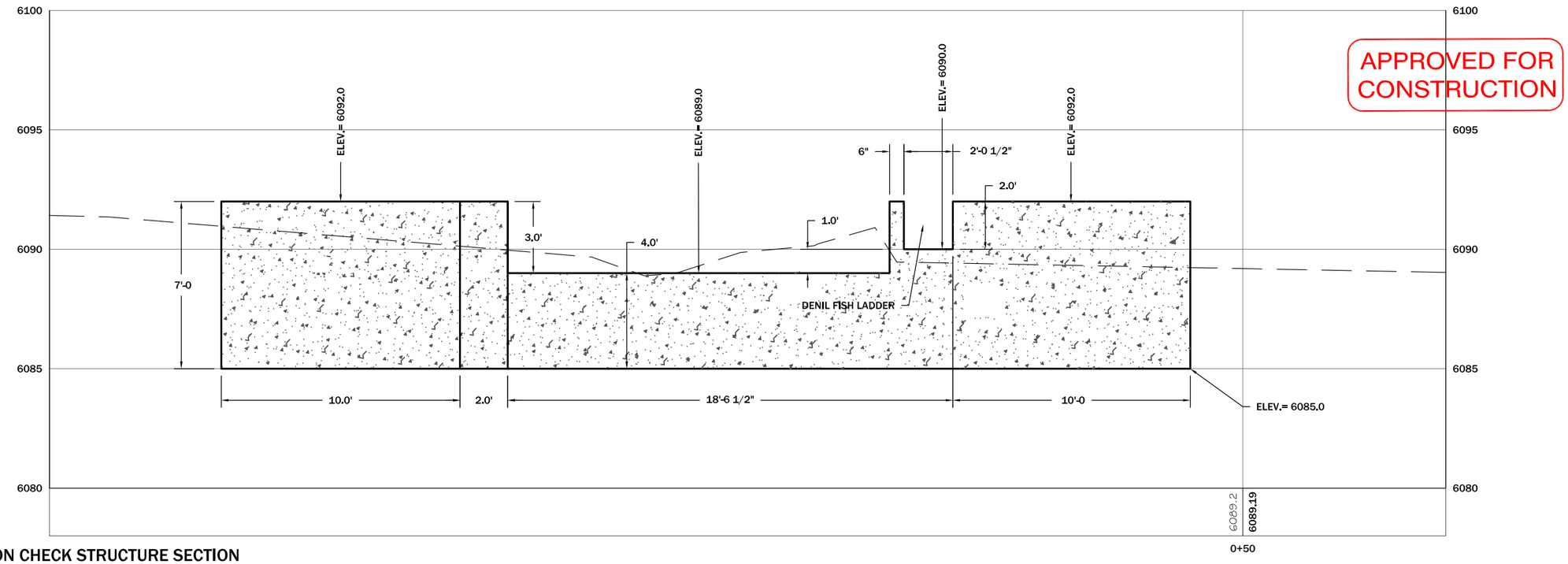


APPROVED FOR CONSTRUCTION

A 3-1 **DIVERSION CHECK STRUCTURE SECTION**
1"=5'

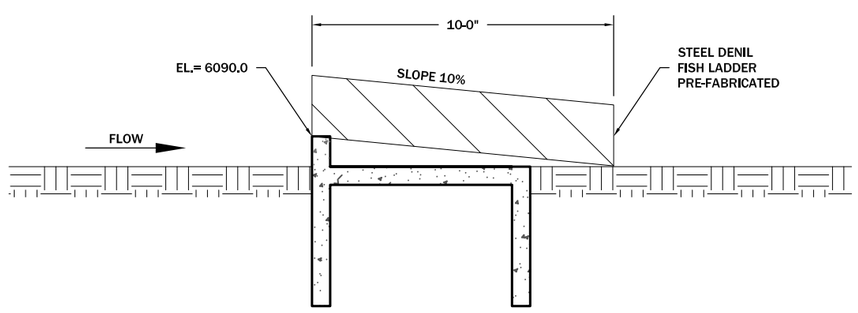


C 3-1 **PROFILE DENIL FISH LADDER**
1"=5'

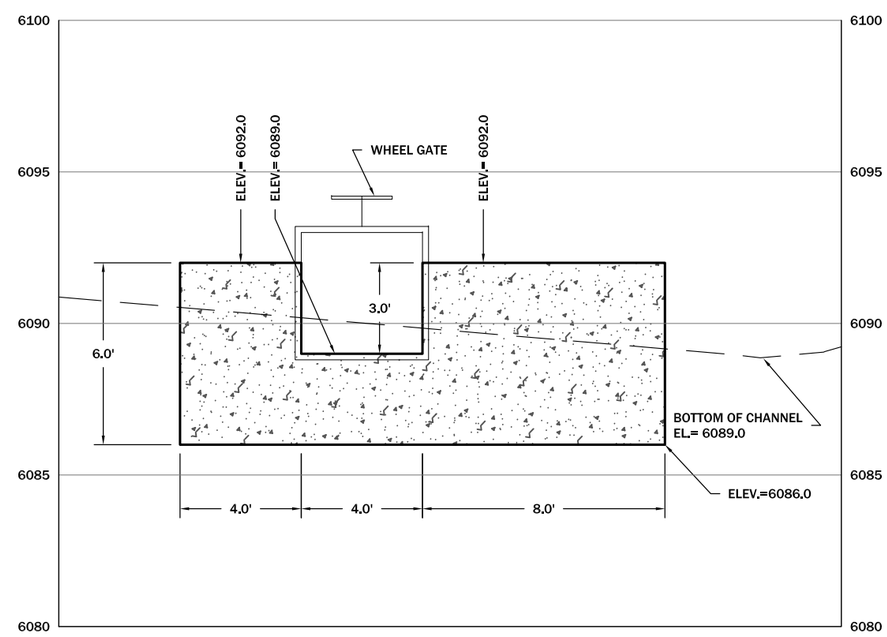


B 3-1 **DIVERSION HEADGATE SECTION**
1"=5'

REVISION:

| DATE: | BY: | DESC: |
|---|---|---|
| | | |

DRAWN BY: ECO
DESIGNED BY: CLM
CHECKED BY: GEA
APPROVED BY: GEA
PROJECT NO: 16822
DATE: 7-12

DISPLAYED AS:
COORD SYS/ZONE: MSP
DATUM: NAD83
UNITS: INT. FEET
SOURCE: PIONEER

SCALE IN FEET
0 5

MONTANA FISH, WILDLIFE & PARKS
WISDOM, MT.
SPOKANE SIPHON

DETAILS
DIVERSION HEADGATE
DIVERSION CHECK STRUCTURE
SWAMP CREEK

PIONEER TECHNICAL SERVICES, INC.
201 EAST BROADWAY
HELENA, MONTANA 59601
(406) 457-8252

SHEET
3-2



7/16/2012 1:29:48 PM P:\HELENADATA\FWP\SPOKANESIPHON2012\CAD\SECTION 3\SPOKANE-DE-PLP-002-12.DWG

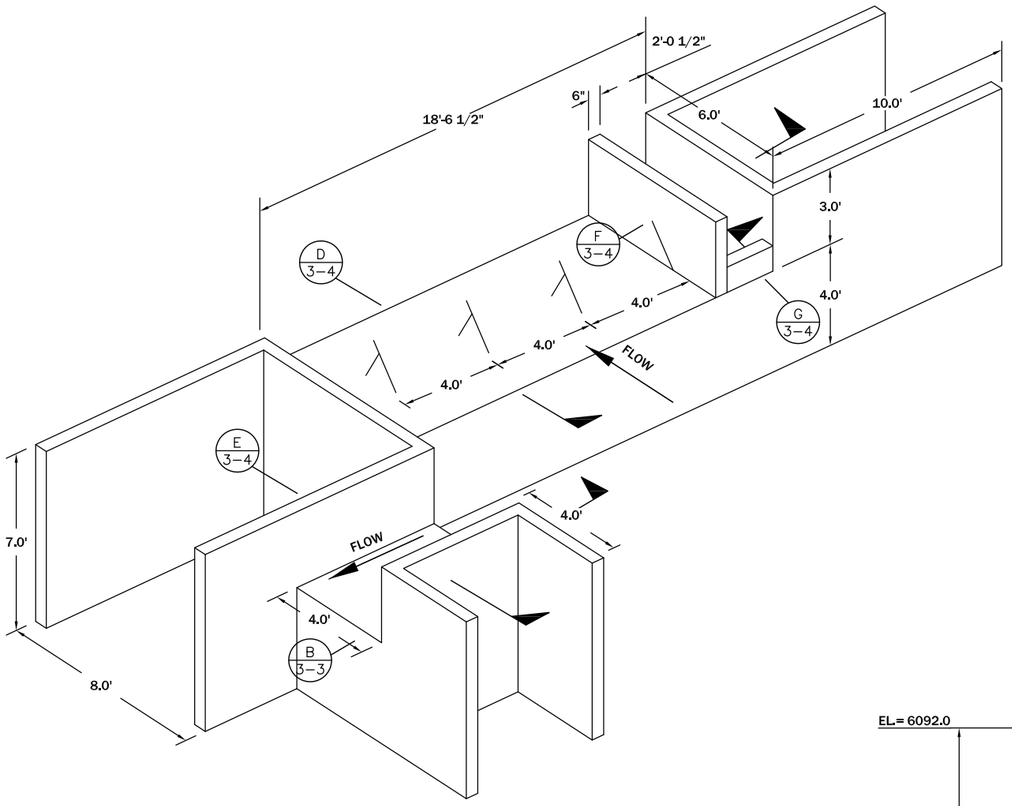


## ISOMETRIC VIEW (A / 3-3)

N.T.S.

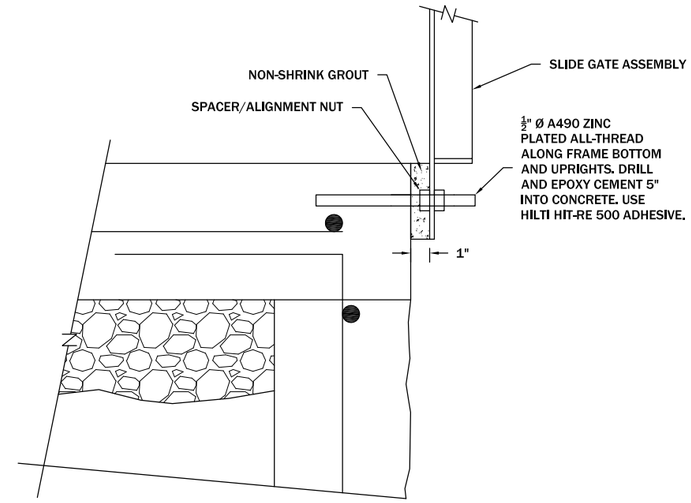


## SLIDE GATE ANCHORAGE (C / 3-3)

1½" = 1'-0"

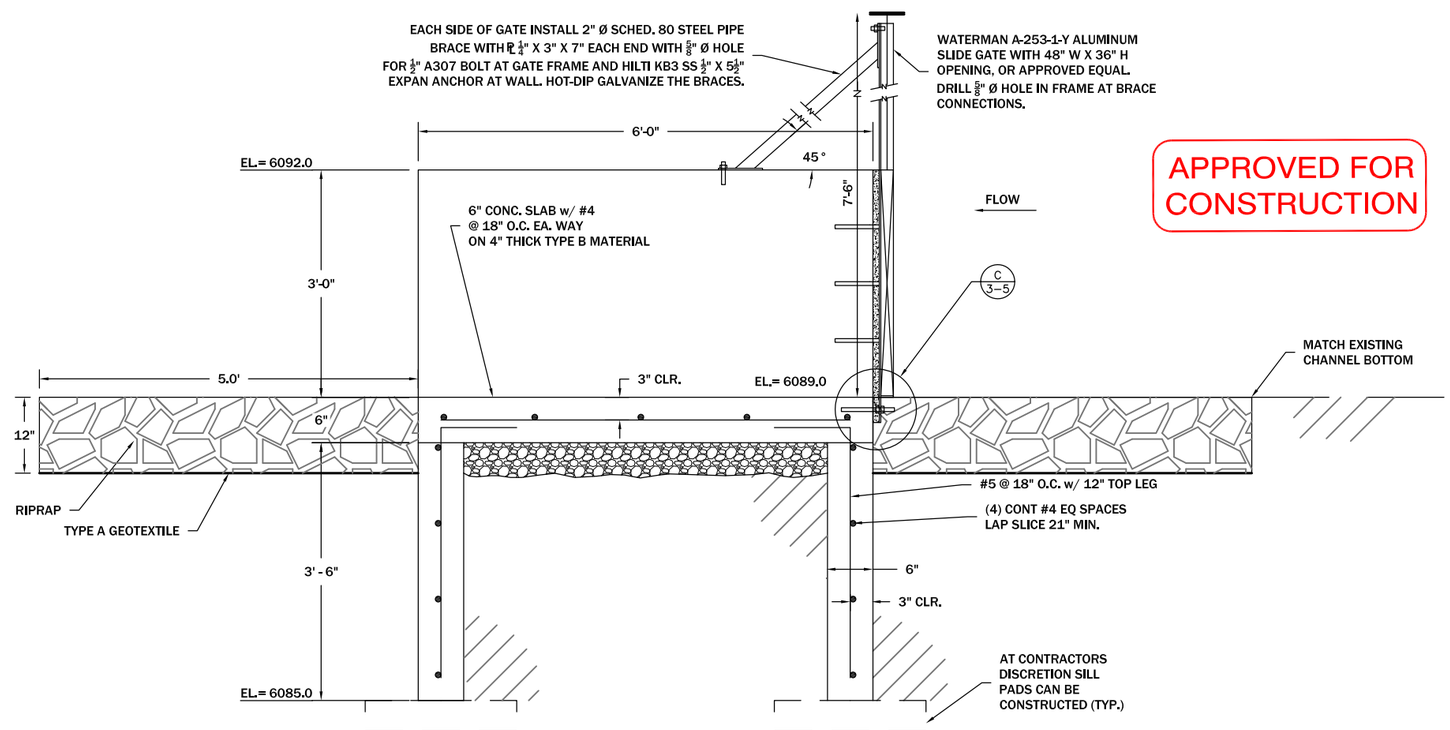


APPROVED FOR CONSTRUCTION

## HEADGATE TYPICAL CROSS-SECTION (B / 3-3)

½" = 1'-0"

REVISION:

| DATE: | BY: | DESC: |
|---|---|---|
| | | |

DRAWN BY: ECO
DESIGNED BY: ACW
CHECKED BY: ACW
APPROVED BY: GEA
PROJECT NO: 16822
DATE: 7-12

DISPLAYED AS:
COORD SYS/ZONE: MSP
DATUM: NAD83
UNITS: IFT.
SOURCE: PIONEER

SCALE IN FEET
0

MONTANA FISH, WILDLIFE & PARKS
SPOKANE SIPHON
WISDOM, MT.

DETAILS
SWAMP CREEK
DIVERSION-CHECK
HEADGATE STRUCTURE

PIONEER TECHNICAL SERVICES, INC.
201 EAST BROADWAY
HELENA, MONTANA 59601
(406) 457-8252

SHEET
3-3

APPROVED FOR CONSTRUCTION

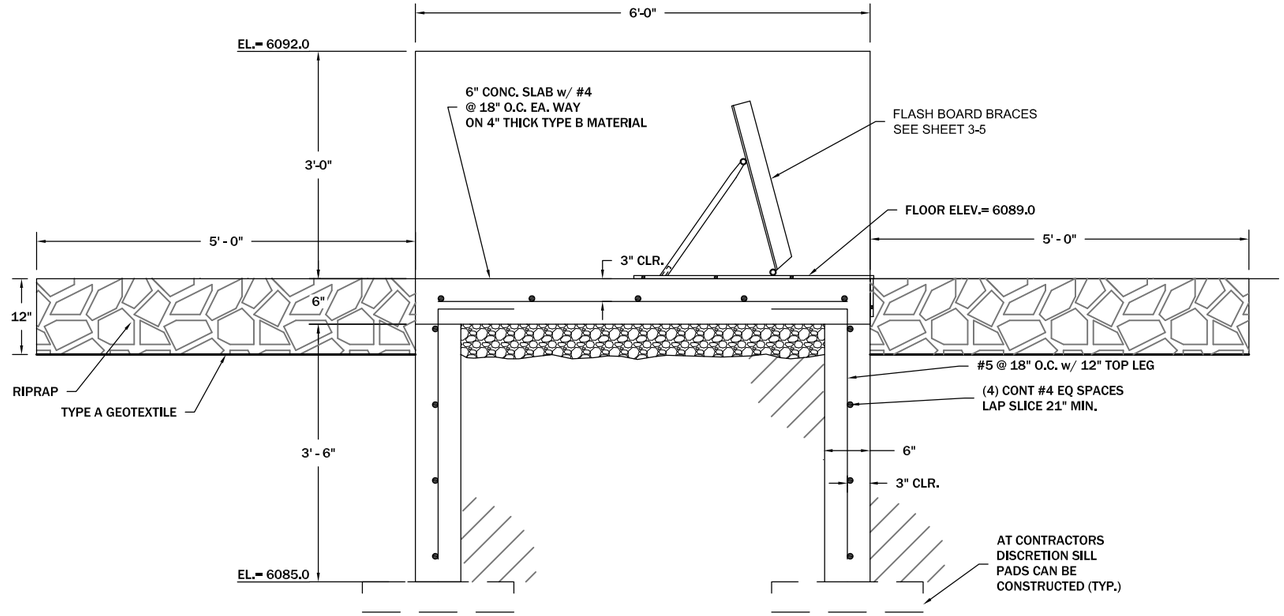


## DIVERSION STRUCTURE TYPICAL CROSS-SECTION

D / 3–4

½" = 1'-0"

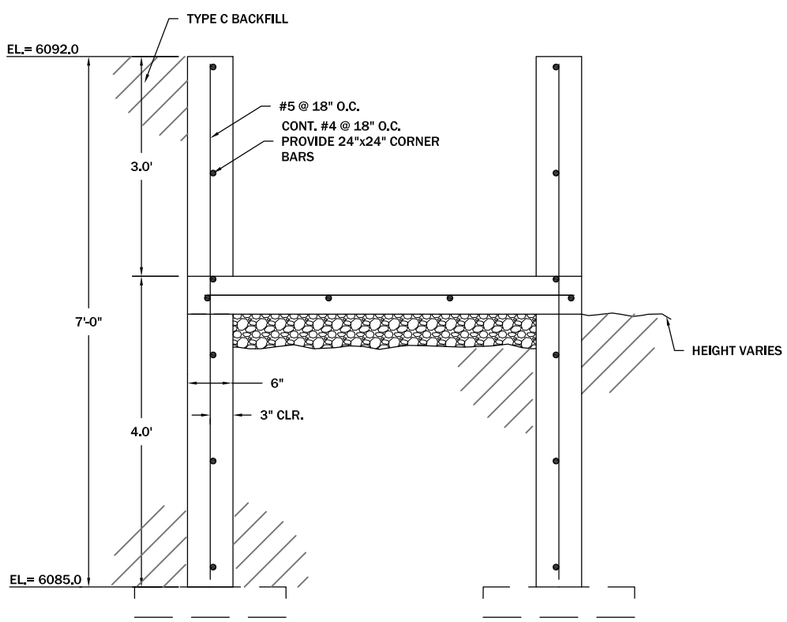


## WINGWALL AND HEADGATE TYPICAL SECTION

E / 3–3

½" = 1'-0"

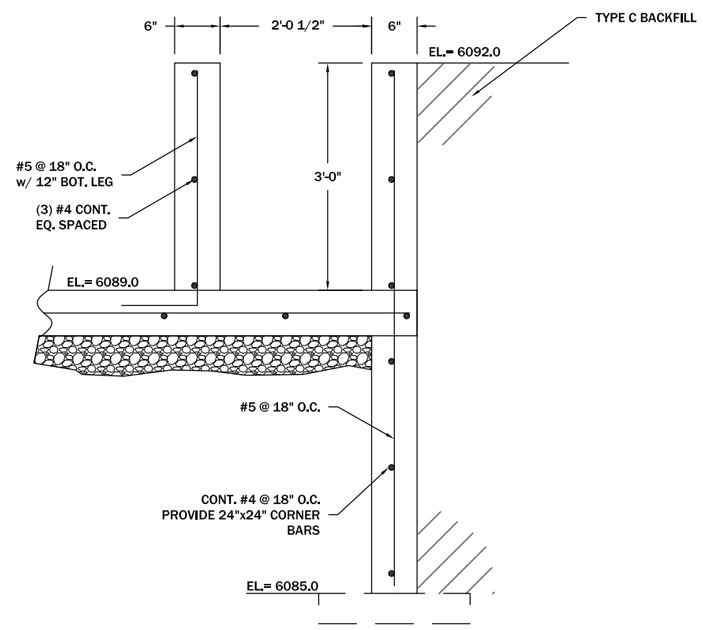


## FISH LADDER CHANNEL SECTION

F / 3–4

½" = 1'-0"

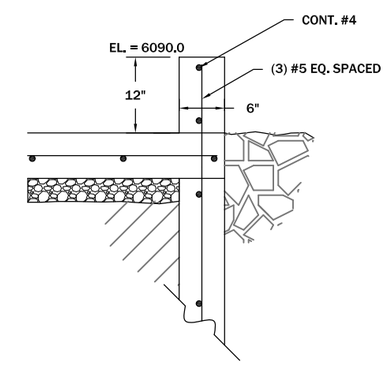


## FISH LADDER SUPPORT PEDESTAL

G / 3–4

½" = 1'-0"

REVISION:

| DATE: | BY: | DESC: |
|---|---|---|
| | | |

DRAWN BY: ECO
DESIGNED BY: ACW
CHECKED BY: ACW
APPROVED BY: GEA
PROJECT NO: 16822
DATE: 7-12

DISPLAYED AS:
COORD SYS/ZONE: MSP
DATUM: NAD83
UNITS: IFT.
SOURCE: PIONEER

SCALE IN FEET
0

MONTANA FISH, WILDLIFE & PARKS
SPOKANE SIPHON
WISDOM, MT.

DETAILS
SWAMP CREEK
DIVERSION-CHECK
HEADGATE STRUCTURE

PIONEER TECHNICAL SERVICES, INC.
201 EAST BROADWAY
HELENA, MONTANA 59601
(406) 457-8252

SHEET
3-4



7/16/2012 3:02:42 PM P:\HELENADATA\FWP\SPOKANESIPHON2012\CAD\SECTION 3\SPOKANE-DE-DET-003-12.DWG

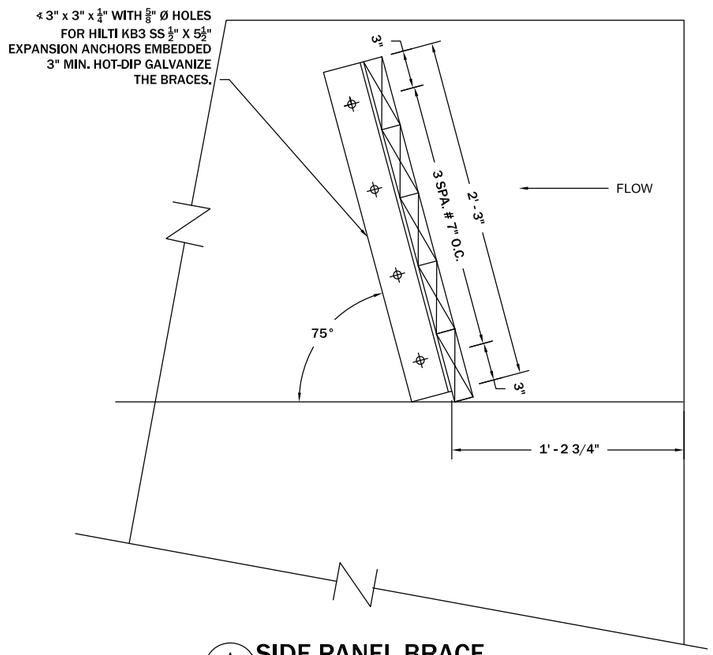


A 3–5 **SIDE PANEL BRACE**
1" = 1' - 0"

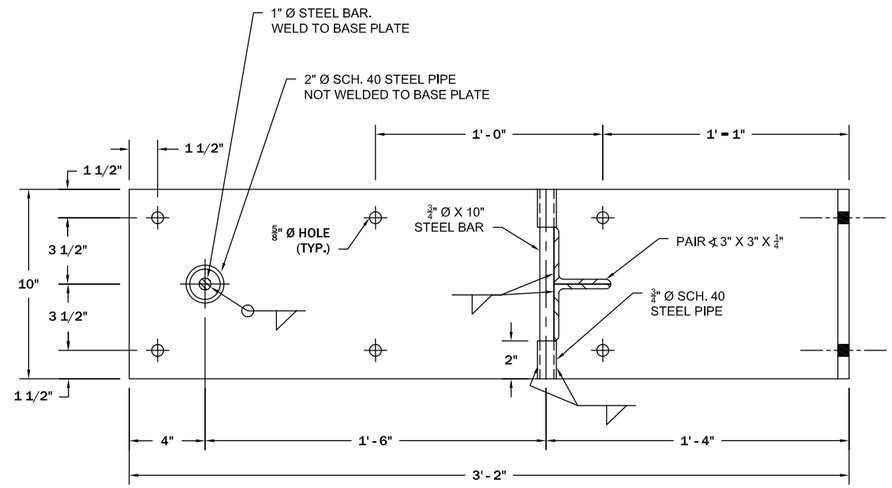


PLAN

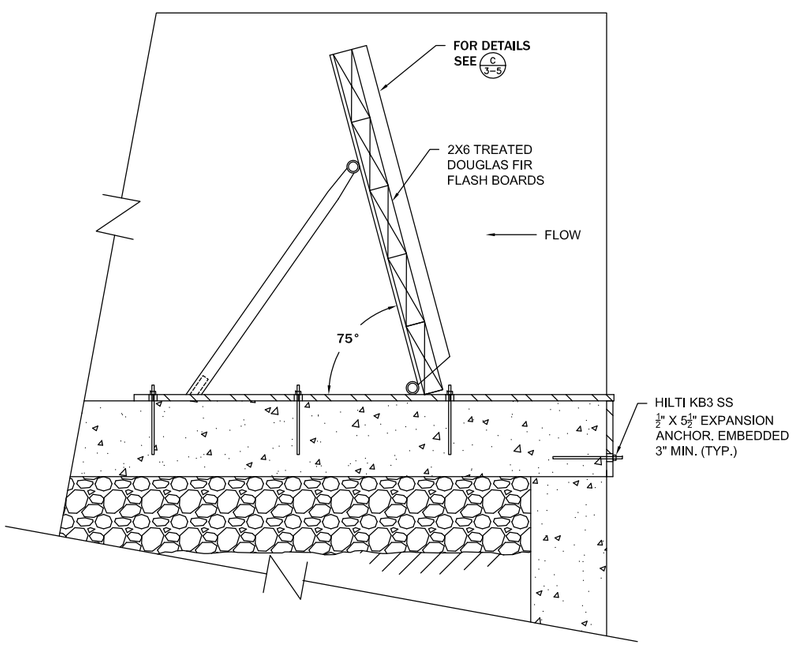


B 3–5 **CENTER BRACE - RAISED POSITION**
1" = 1' - 0"

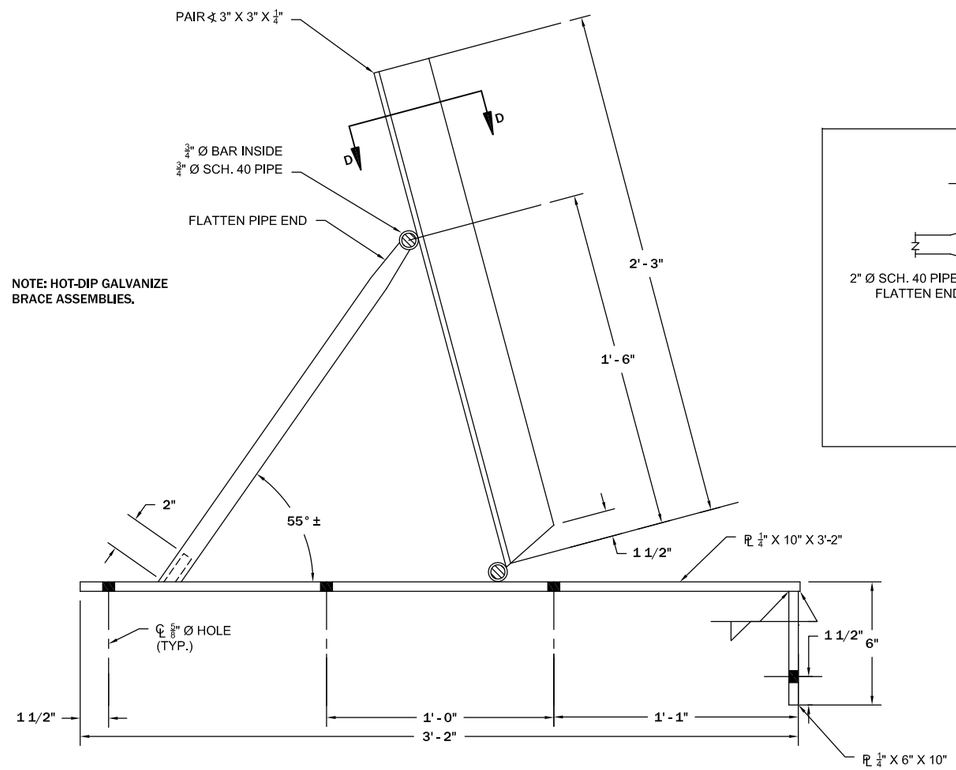


ELEVATION

C 3–5 **CENTER BRACE DETAILS**
1½" = 1' - 0"

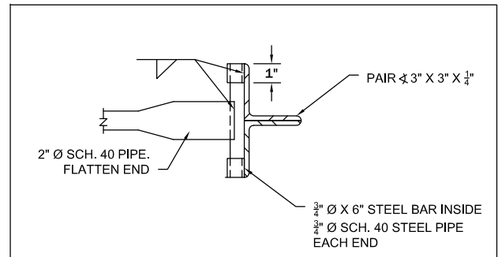


SECTION D-D

APPROVED FOR CONSTRUCTION

REVISION:

| DATE: | BY: | DESC: |
|---|---|---|
| | | |

DRAWN BY: CR
DESIGNED BY: ACW
CHECKED BY: GEA
APPROVED BY: GEA
PROJECT NO: 16822
DATE: 7-12

DISPLAYED AS:
COORD SYS/ZONE: MSP
DATUM: NAD83
UNITS: INT. FEET
SOURCE: PIONEER

SCALE IN FEET
0

MONTANA FISH, WILDLIFE & PARKS
SPOKANE SIPHON
WISDOM, MT

DETAILS
SWAMP CREEK
DIVERSION STRUCTURE
FLASH BOARD BRACES

PIONEER TECHNICAL SERVICES, INC.
201 E. BROADWAY, SUITE C
HELENA, MT 59601
(406) 457-8252

SHEET
3-5

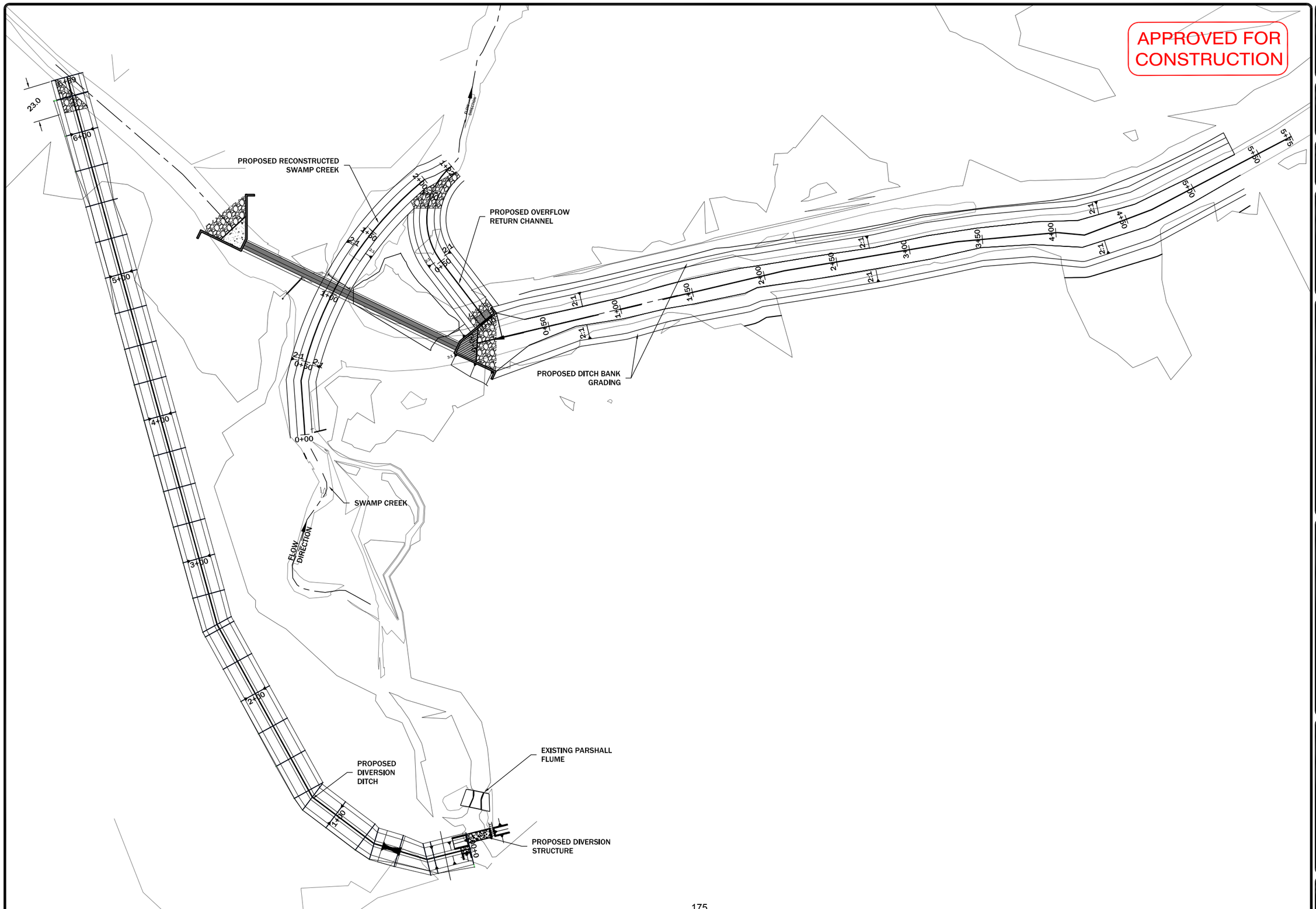


REVISION:

| DATE: | BY: | DESC: |
|---|---|---|
| | | |

DRAWN BY: ECO
DESIGNED BY: CLM
CHECKED BY: GEA
APPROVED BY: GEA
PROJECT NO: 16822
DATE: 7-12

DISPLAYED AS:
COORD SYS/ZONE: MSP
DATUM: NAD83
UNITS: INT.FEET
SOURCE: PIONEER

SCALE IN FEET
0 30 60

MONTANA FISH, WILDLIFE & PARKS
WISDOM, MT.
SPOKANE SIPHON

# GRADING PLAN SPOKANE SIPHON

PIONEER TECHNICAL SERVICES, INC.
201 E. BROADWAY, SUITE C
HELENA, MONTANA 59601
(406) 457-8252

SHEET 4-1



7/16/2012 1:46:13 PM P:\HELENADATA\FWP\SPOKANESIPHON2012\CAD\SECTION 4\SPOKANE-SECTION 4.DWG

| | SWAMP CREEK | | |
|---|---|---|---|
| POINT NUMBER | STATION | NORTHING | EASTING |
| PN1 | 0+00 | 525,431.7619' | 939,100.7009' |
| PN2 | 0+37 | 525,429.4717' | 939,124.7121' |
| PN3 | 0+50 | 525,466.3482' | 939,136.1346' |
| PN4 | 0+75 | 525,477.5166' | 939,158.4890' |
| PN5 | 1+00 | 525,486.3396' | 939,181.8687' |
| PN6 | 1+25 | 525,492.7246' | 939,206.0282' |
| PN7 | 1+50 | 525496.6047' | 939230.7142' |
| PN8 | 1+75 | 525,497.9390' | 939,255.6677' |
| PN9 | 1+99 | 525,496.7387' | 939,280.3756' |

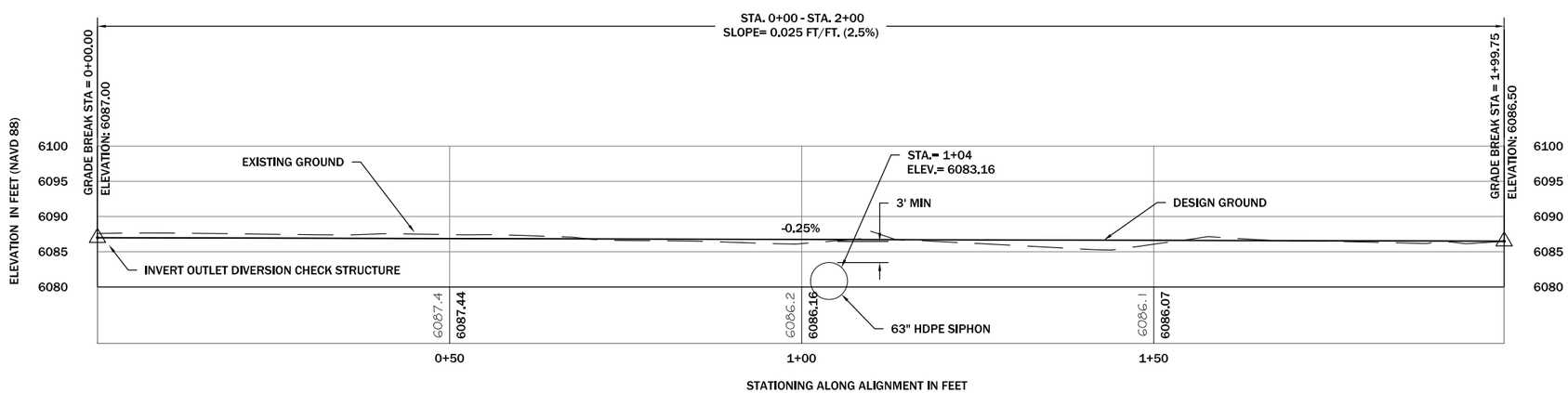


REVISION:

| DATE: | BY: | DESC: |
|---|---|---|
| | | |

DRAWN BY: ECO
DESIGNED BY: CLM
CHECKED BY: GEA
APPROVED BY: GEA
PROJECT NO: 16822
DATE: 7-12

DISPLAYED AS:
COORD SYS/ZONE: MSP
DATUM: NAD83
UNITS: INT.FEET
SOURCE: PIONEER

SCALE IN FEET
0 20 40

MONTANA FISH, WILDLIFE & PARKS
WISDOM, MT.
SPOKANE SIPHON

SWAMP CREEK
GRADING
PLAN AND PROFILE

PIONEER TECHNICAL SERVICES, INC.
201 E. BROADWAY, SUITE C
HELENA, MONTANA 59601
(406) 457-8252

SHEET
4-2



7/16/2012 1:53:19 PM P:\HELENADATA\FWP\SPOKANESIPHON2012\CAD\SECTION 4\SPOKANE-SECTION 4.DWG

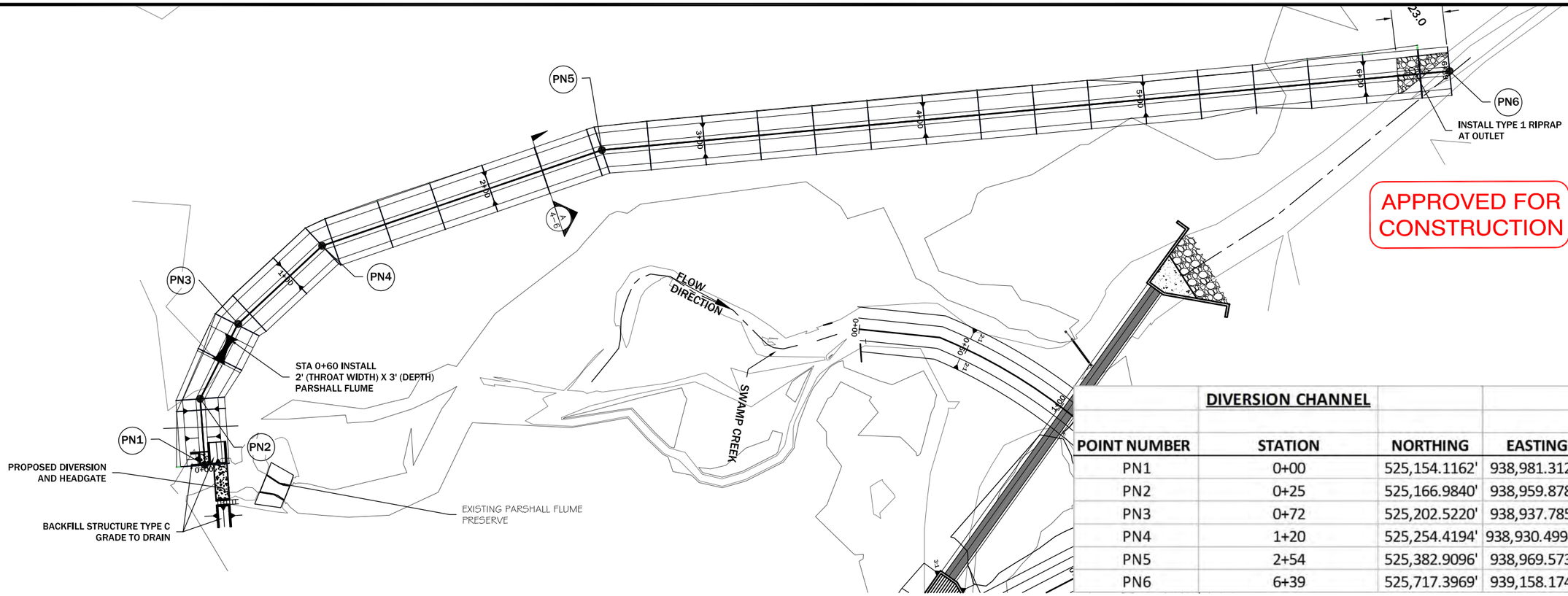


APPROVED FOR CONSTRUCTION

## DIVERSION CHANNEL

| POINT NUMBER | STATION | NORTHING | EASTING |
|---|---|---|---|
| PN1 | 0+00 | 525,154.1162' | 938,981.3124' |
| PN2 | 0+25 | 525,166.9840' | 938,959.8783' |
| PN3 | 0+72 | 525,202.5220' | 938,937.7851' |
| PN4 | 1+20 | 525,254.4194' | 938,930.4994' |
| PN5 | 2+54 | 525,382.9096' | 938,969.5731' |
| PN6 | 6+39 | 525,717.3969' | 939,158.1742' |

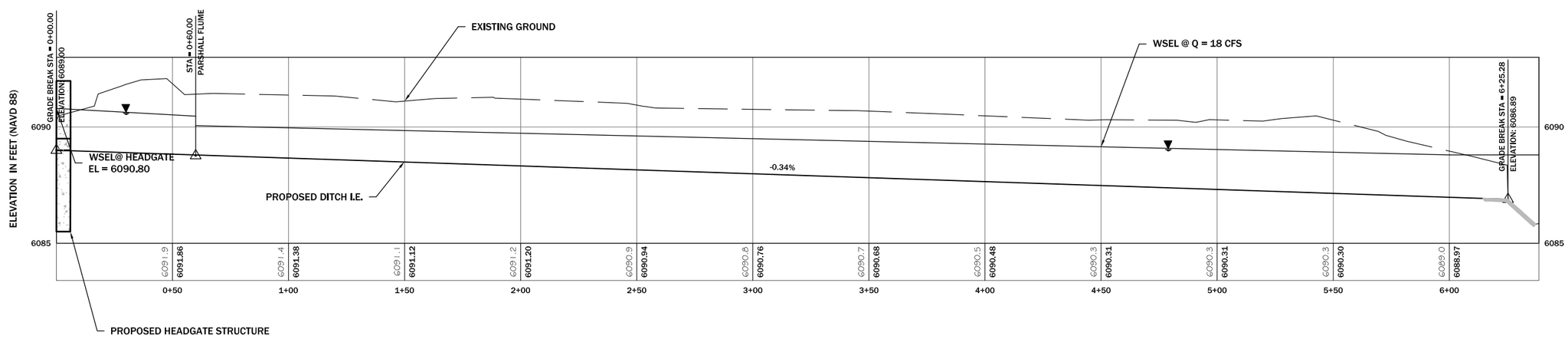


SCALE IN FEET
0 25 50

SCALE IN FEET
5
50

REVISION:

| DATE: | BY: | DESC: |
|---|---|---|
| | | |

DRAWN BY: ECO
DESIGNED BY: CLM
CHECKED BY: GEA
APPROVED BY: GEA
PROJECT NO: 16822
DATE: 7-12

DISPLAYED AS:
COORD SYS/ZONE: MSP
DATUM: NAD83
UNITS: INT.FEET
SOURCE: PIONEER

MONTANA FISH, WILDLIFE & PARKS
WISDOM, MT.
SPOKANE SIPHON

# SWAMP CREEK DIVERSION DITCH PLAN-PROFILE

PIONEER TECHNICAL SERVICES, INC.
201 E. BROADWAY, SUITE C
HELENA, MONTANA 59601
(406) 457-8252

SHEET
4-3



7/17/2012 10:11:34 AM P:\HELENADATA\FWP\SPOKANESIPHON2012\CAD\SECTION 4\SPOKANE-SECTION 4.DWG

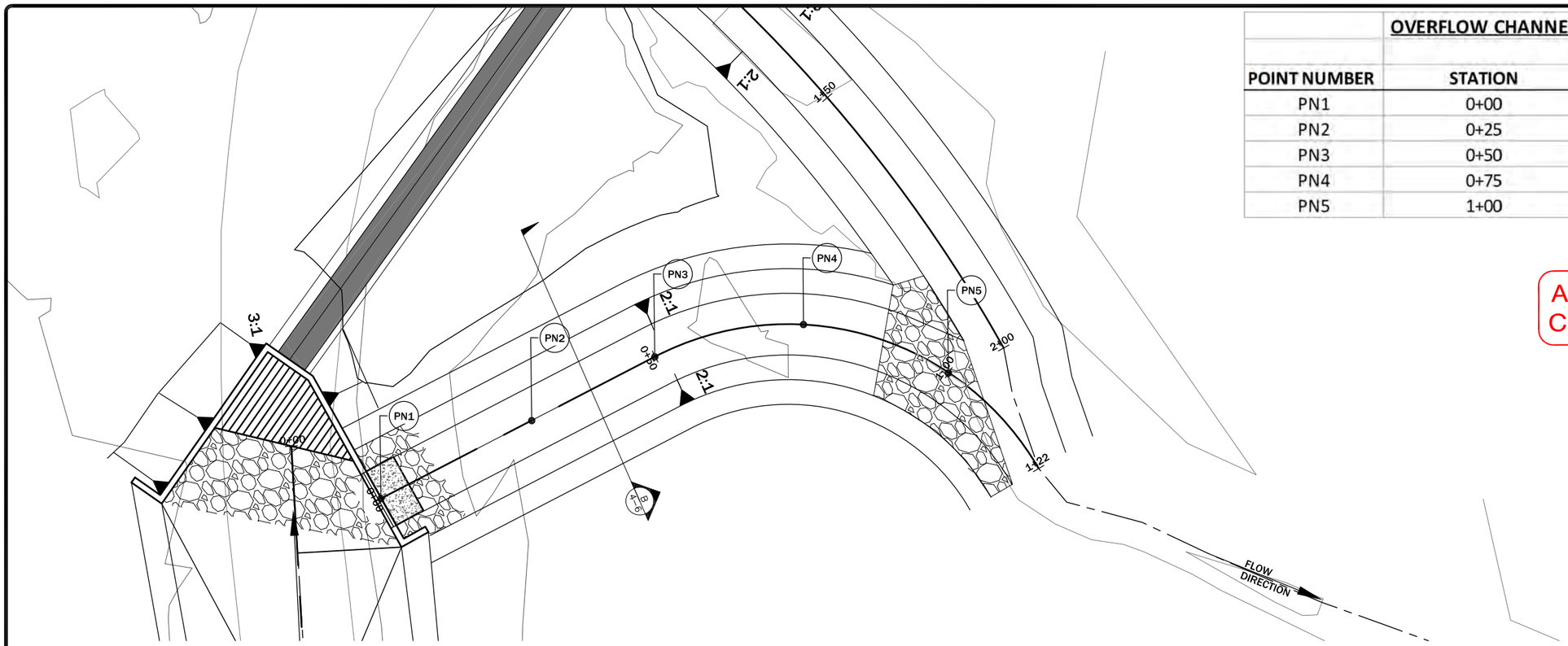


## OVERFLOW CHANNEL

| POINT NUMBER | STATION | NORTHING | EASTING |
|---|---|---|---|
| PN1 | 0+00 | 525,400.0936' | 939,242.4744' |
| PN2 | 0+25 | 525,424.8731' | 939,245.7879' |
| PN3 | 0+50 | 525,449.6525' | 939,249.1014' |
| PN4 | 0+75 | 525,472.4131' | 939,258.7088' |
| PN5 | 1+00 | 525,487.1351' | 939,278.5483' |

APPROVED FOR CONSTRUCTION

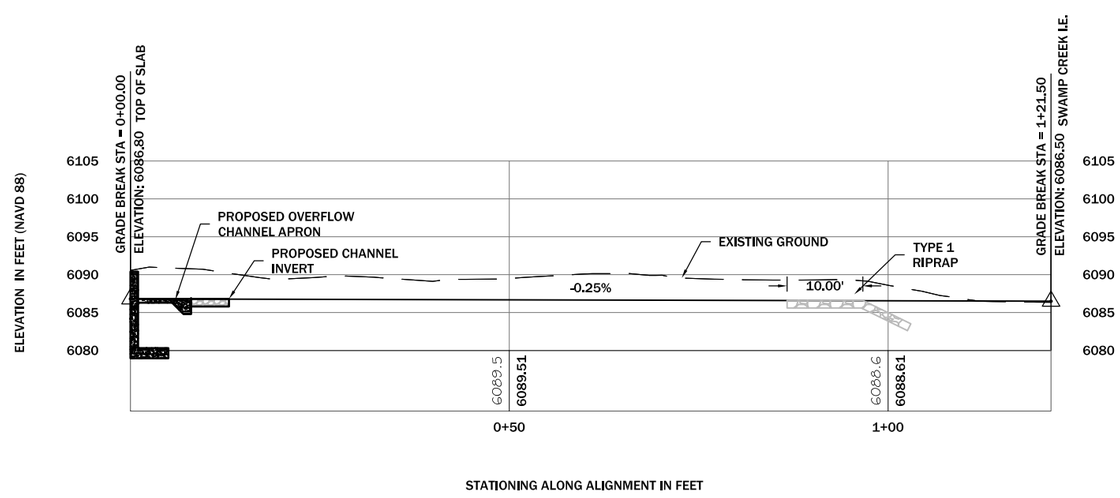


SCALE IN FEET
20
20

REVISION:
DATE: BY: DESC:

DRAWN BY: ECO
DESIGNED BY: CLM
CHECKED BY: GEA
APPROVED BY: GEA
PROJECT NO: 16822
DATE: 7-12

DISPLAYED AS:
COORD SYS/ZONE: MSP
DATUM: NAD83
UNITS: INT.FEET
SOURCE: PIONEER

SCALE IN FEET
0 25 50

MONTANA FISH, WILDLIFE & PARKS
WISDOM, MT.
SPOKANE SIPHON

SWAMP CREEK
OVERFLOW CHANNEL
PLAN-PROFILE

PIONEER TECHNICAL SERVICES, INC.
201 E. BROADWAY, SUITE C
HELENA, MONTANA 59601
(406) 457-8252

SHEET
4-4

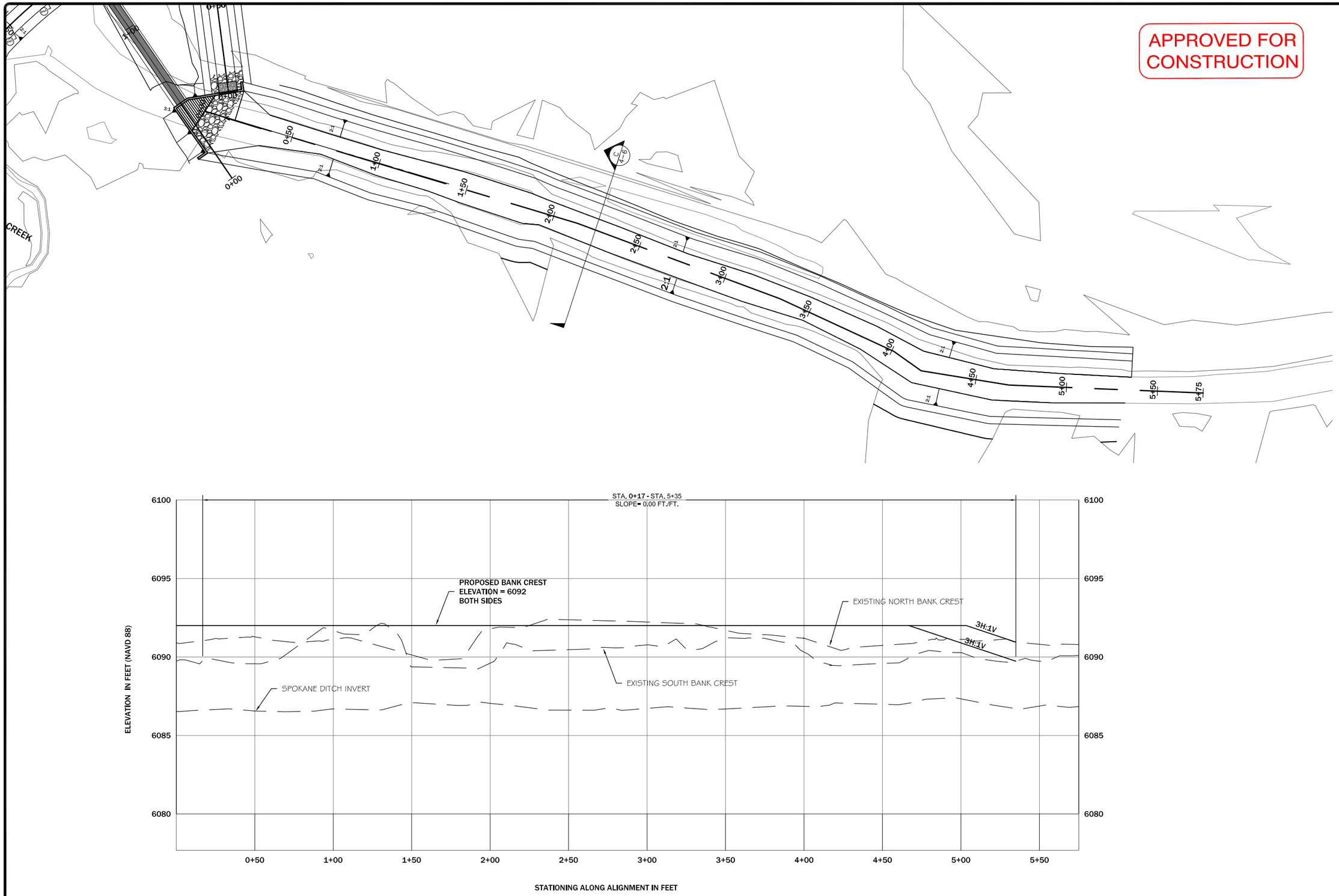


REVISION:

| DATE: | BY: | DESC: |
|---|---|---|
| | | |

DRAWN BY: ECO
DESIGNED BY: CLM
CHECKED BY: GEA
APPROVED BY: GEA
PROJECT NO: 16822
DATE: 7-12

DISPLAYED AS:
COORD SYS/ZONE: MSP
DATUM: NAD83
UNITS: INT.FEET
SOURCE: PIONEER

SCALE IN FEET
0 25 50

MONTANA FISH, WILDLIFE & PARKS
WISDOM, MT.
SPOKANE SIPHON

SPOKANE DITCH
BANK GRADING
PLAN AND PROFILE

PIONEER TECHNICAL SERVICES, INC.
201 E. BROADWAY, SUITE C
HELENA, MONTANA 59601
(406) 457-8252

SHEET
4-5



7/16/2012 2:23:37 PM P:\HELENADATA\FWP\SPOKANESIPHON2012\CAD\SECTION 4\SPOKANE-SECTION 4.DWG

APPROVED FOR CONSTRUCTION

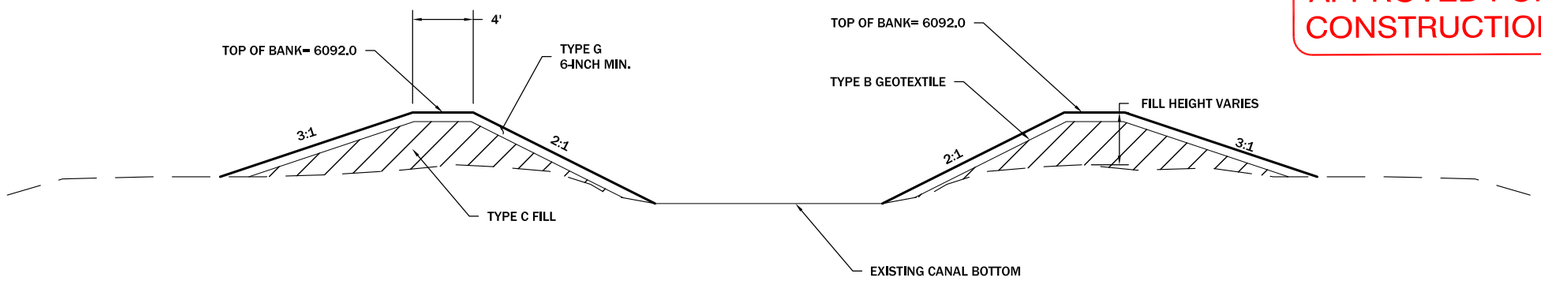


C 4-5 SPOKANE DITCH BANK GRADING TYPICAL SECTION

NTS

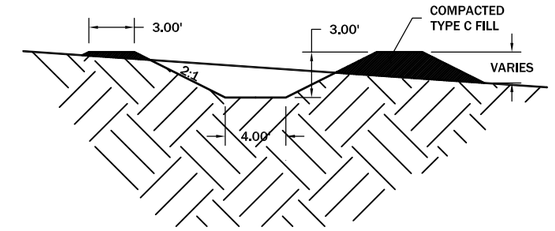


A 4-3 DIVERSION DITCH TYPICAL SECTION

SCALE IN FEET
0 5 10

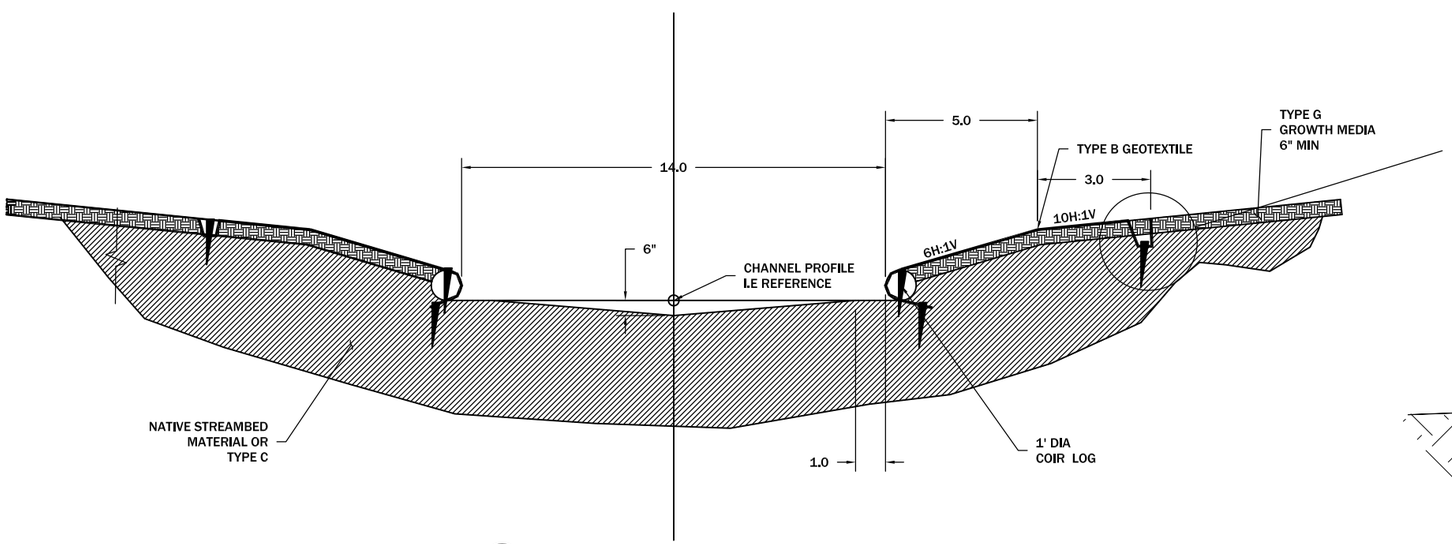


D 4-2 SWAMP CREEK CHANNEL TYPICAL SECTION

SCALE IN FEET
0 2.5 5

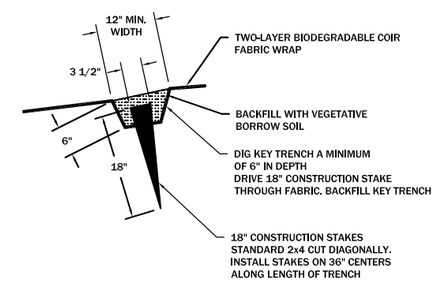


TYPE B GEOTEXTILE COIR FABRIC ANCHOR DETAIL

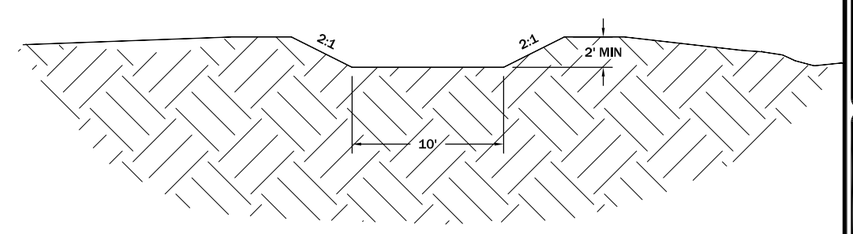


B 4-4 OVERFLOW CHANNEL TYPICAL SECTION

SCALE IN FEET
0 5 10

REVISION:

| DATE: | BY: | DESC: |
|---|---|---|
| | | |

DRAWN BY: ECO
DESIGNED BY: CLM
CHECKED BY: GEA
APPROVED BY: ###
PROJECT NO: 16822
DATE: 6-25-12

DISPLAYED AS:
COORD SYS/ZONE: MSP
DATUM: NAD83
UNITS: INT.FEET
SOURCE: PIONEER

SCALE IN FEET
0

MONTANA FISH, WILDLIFE & PARKS
WISDOM, MT.
SPOKANE SIPHON

GRADING PLAN
SECTIONS AND DETAILS

PIONEER TECHNICAL SERVICES, INC.
201 E. BROADWAY, SUITE C
HELENA, MONTANA 59601
(406) 457-8252

SHEET
4-6