COORDINATION NOTE:
IT IS ABSOLUTELY NECESSARY FOR ALL TRADES INCLUDING EQUIPMENT SUPPLIERS TO COORDINATE WITH EACH OTHER AND TO VERIFY THAT THERE ARE NO CONFLICTS IN LOCATIONS OF DUCTS, CONDUITS, SPRINKLER HEADS, SPRINKLER PIPING, DIFFUSERS, ELECTRICAL BOXES AND OTHER ITEMS THROUGHOUT THIS PROJECT BEFORE FINAL PLACEMENT OF MATERIALS.

Montana Fish, Wildlife & Parks

MONTANA FISH WILDLIFE AND PARKS

REGION 3 HEADQUARTERS LIGHTING UPGRADES
CONSTRUCTION DOCUMENTS
12 FEBRUARY, 2014

ELECTRICAL ENGINEER:
CONSULTING DESIGN SOLUTIONS
7540 CHURCHILL RD
MANHATTAN, MT 59741
(406)282-7082

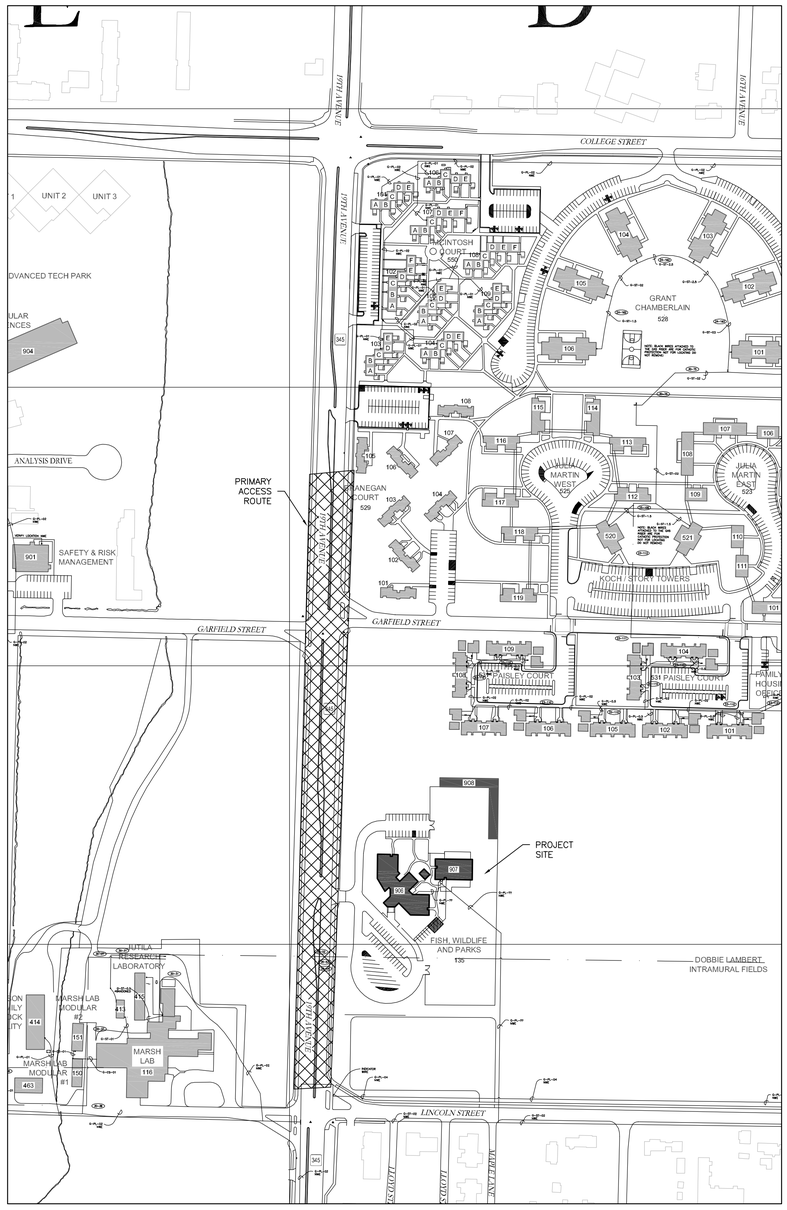

1 Cvr **VICINITY PLAN**
NO SCALE

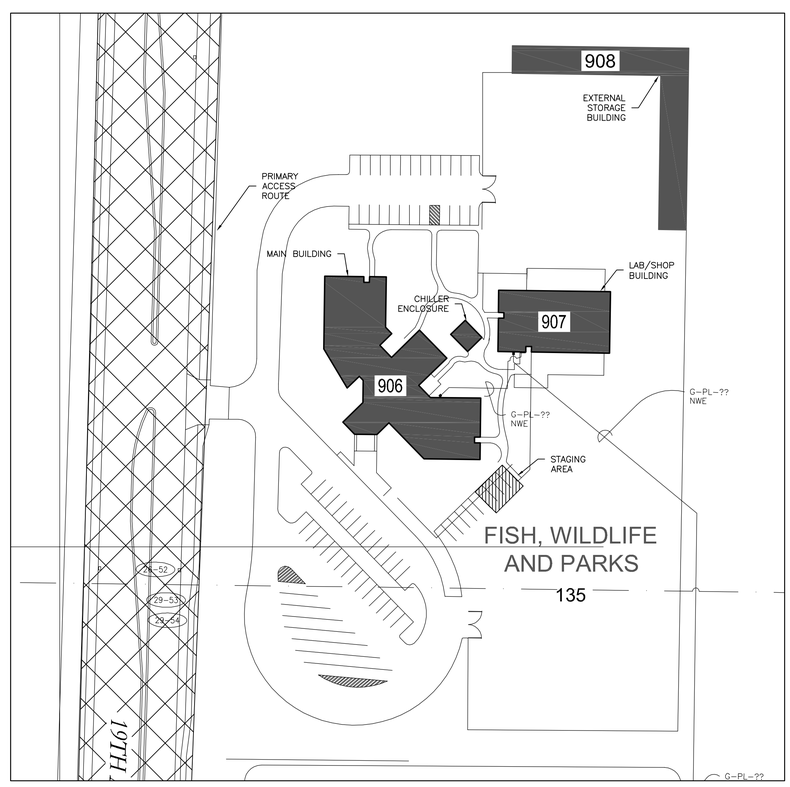

2 Cvr **SITE PLAN**
NO SCALE

GENERAL PROJECT NOTES

A. ALL CONSTRUCTION AND CONSTRUCTION METHODS TO BE IN ACCORDANCE WITH APPLICABLE CODES, GOVERNMENTAL AGENCIES, AND LOCAL DESIGN CRITERIA INCLUDING, BUT NOT LIMITED TO, THE FOLLOWING:
   - INTERNATIONAL BUILDING CODE, 2009 EDITION
   - NATIONAL ELECTRIC CODE, 2011 EDITION
   - INTERNATIONAL ENERGY CONSERVATION CODE, 2009 EDITION

B. ANY AMBIGUITIES OR DISCREPANCIES DISCOVERED BY THE USE OF THESE CONTRACT DOCUMENTS SHALL BE REPORTED TO THE ENGINEER IMMEDIATELY.

C. CHANGES OR DEVIATIONS FROM THE CONTRACT DOCUMENTS MADE WITHOUT THE WRITTEN CONSENT OF THE OWNER ARE UNAUTHORIZED. COORDINATE NECESSARY MODIFICATIONS WITH THE ENGINEER PRIOR TO CONSTRUCTION.

D. THE CONTRACTOR IS RESPONSIBLE FOR THE COORDINATION AND SCHEDULING OF ALL REQUIRED INSPECTIONS DURING THE COURSE OF THE CONSTRUCTION PROJECT. PARTIES REQUIRED TO ATTEND SHOULD BE GIVEN 48 HOURS MINIMUM NOTICE.

E. THE CONTRACTOR SHALL BE SOLELY RESPONSIBLE FOR SAFETY AND SHALL TAKE WHATEVER MEASURES ARE NECESSARY TO ENSURE THE HEALTH AND SAFETY OF THE CONTRACTOR'S EMPLOYEES, SUBCONTRACTORS, BUILDING OCCUPANTS, PEDESTRIANS AT OR NEAR THE CONSTRUCTION SITE OR ACCESS ROUTES, AND OF ALL OTHER PERSONS IN AREAS AFFECTED BY THE CONTRACTOR'S CONSTRUCTION ACTIVITIES.

GENERAL SITE / STAGING NOTES

A. THE CONTRACTOR SHALL MINIMIZE INTERFERENCE WITH ADJOINING STREETS, SIDEWALKS, PARKING AREAS, AND OTHER ADJACENT OCCUPIED OR USED FACILITIES DURING CONSTRUCTION OPERATIONS. THE CONTRACTOR SHALL NOT BLOCK STREETS, SIDEWALKS, OR ACCESS TO DUMPSTER LOCATIONS AT ANY TIME.

B. THE CONTRACTOR SHALL PROTECT EXISTING SITE AND LANDSCAPING FROM DAMAGE CAUSED BY CONSTRUCTION OPERATIONS. THE CONTRACTOR SHALL RESTORE EXISTING SITE AND LANDSCAPING DAMAGED BY CONSTRUCTION OPERATIONS TO ORIGINAL CONDITIONS.

C. THE CONTRACTOR SHALL PROTECT THE EXISTING BUILDINGS FROM DAMAGE, CONTAMINATION, AND SOILING CAUSED BY CONSTRUCTION OPERATIONS. THE CONTRACTOR SHALL KEEP BUILDING ENTRANCES AND STAIRWELLS CLEAR OF CONSTRUCTION MATERIALS, TOOLS, AND EQUIPMENT AT ALL TIMES.

D. THE CONTRACTOR SHALL ACCESS THE SITE FROM S. 19TH AVENUE.

E. ALL CONTRACTOR VEHICLES PARKED ON SITE, INCLUDING VEHICLES OWNED BY EMPLOYEES OF THE CONTRACTOR, SHALL BE PARKED IN DESIGNATED PARKING AREAS ONLY. VEHICLES MAKING DELIVERIES TO THE PROJECT SITE MUST BE MOVED TO A DESIGNATED PARKING AREA OR REMOVED FROM THE SITE IMMEDIATELY AFTER UNLOADING.

F. CONSTRUCTION STAGING AREA: SHOULD THE CONTRACTOR REQUIRE ON-SITE CONSTRUCTION STAGING, AN AREA FOR THIS PURPOSE WILL BE PROVIDED. THE CONTRACTOR MAY BE REQUIRED TO FENCE THE STAGING AREA TO PREVENT ACCESS FROM UNAUTHORIZED PERSONNEL. THE CONTRACTOR SHALL RESTORE AREAS USED FOR CONSTRUCTION STAGING THAT ARE DAMAGED DURING THE COURSE OF CONSTRUCTION OPERATIONS TO EXISTING CONDITIONS PRIOR TO SUBSTANTIAL COMPLETION.

LEGEND

THE CONTRACTOR SHALL LIMIT HIS OPERATIONS TO THE AREAS DEFINED BELOW. AREAS BEYOND THESE LIMITS ARE NOT IN CONTRACT (NIC) AND SHALL NOT BE USED BY THE CONTRACTOR FOR ANY PURPOSE DURING THE COURSE OF CONSTRUCTION.

- CONSTRUCTION STAGING AREA: CONTRACTOR MAY UTILIZE THE INDIVIDUAL PARKING SPACES WITHIN THE SCOPE OF THIS PROJECT FOR CONSTRUCTION STAGING. STAGING AREA LOCATIONS INDICATED ON SITE PLAN ARE APPROXIMATE.
- PRIMARY ACCESS ROUTE: JOB RELATED VEHICULAR TRAFFIC SHALL ACCESS THE CONSTRUCTION SITE BY THIS ROUTE ONLY
- CONTRACT LIMITS (CONSTRUCTION SCOPE OF WORK)

INDEX OF DRAWINGS

CVR SITE PLAN, GENERAL PROJECT NOTES, GENERAL SITE / STAGING NOTES, LEGEND, INDEX OF DRAWINGS

ED1.1 MAIN BUILDING FIRST FLOOR LIGHTING DEMOLITION PLAN
ED1.2 LAB/SHOP LIGHTING DEMOLITION PLANS
ED1.3 EXTERNAL STORAGE LIGHTING DEMOLITION PLAN
E1.1 MAIN BUILDING FIRST FLOOR LIGHTING REMODEL PLAN
E1.2 LAB/SHOP LIGHTING REMODEL PLANS
E1.3 EXTERNAL STORAGE LIGHTING REMODEL PLAN
E2.1 ELECTRICAL LEGEND AND SCHEDULE(S)
E2.2 ELECTRICAL SCHEDULES(S) AND DETAILS

Montana Fish, Wildlife & Parks

MONTANA FISH WILDLIFE AND PARKS
REGION 3 HQ LIGHTING UPGRADES
1400 SOUTH 19TH AVE, BOZEMAN, MT 59718

PROJECT COVER SHEET

CDS
CONSULTING DESIGN SOLUTIONS, INC.
ENGINEERING
7540 CHURCHILL RD MANHATTAN, MT 59741
PHONE: (406) 282 7082 FAX: (406) 282-7087

MONTANA
Scott T. Elders
No. 29029PE
PROFESSIONAL ENGINEER

PROJECT: FWP# 7099408 , CDSI # 1322
DRAWN BY: STE
APPROVED: CDS
DATE: February 12, 2014 REVISED:
SHEET NUMBER:
CVR

COORDINATION NOTE:

IT IS ABSOLUTELY NECESSARY FOR ALL TRADES INCLUDING EQUIPMENT SUPPLIERS TO COORDINATE WITH EACH OTHER AND TO VERIFY THAT THERE ARE NO CONFLICTS IN LOCATIONS OF DUCTS, CONDUITS, SPRINKLER HEADS, SPRINKLER PIPING, DIFFUSERS, ELECTRICAL BOXES AND OTHER ITEMS THROUGHOUT THIS PROJECT BEFORE FINAL PLACEMENT OF MATERIALS.

GENERAL NOTES

1. ELECTRICAL CONTRACTOR SHALL REMOVE ALL ELECTRICAL DEVICES IN AREAS OF THIS FACILITY AFFECTED BY REMODEL WORK INCLUDING BUT NOT LIMITED TO: JUNCTION BOXES, OUTLETS, LIGHTS, CABLE, CONDUIT AND WIRE. ALL DEVICES MAY NOT BE SHOWN ON THIS SHEET AND SITE INVESTIGATION IS REQUIRED FOR EXACT QUANTITIES. CONFIRM DEMOLITION SCOPE AT PRE-BID WALK AND RECYCLE WHERE FEASIBLE. DISPOSE OF ALL FLUORESCENT LAMPS AND BALLASTS IN A LEGAL AND ENVIRONMENTALLY FRIENDLY MANNER. PROVIDE PROPER DISPOSAL DOCUMENTATION STATING ITEMS DISPOSED OF AND QUANTITY TO OWNER FOR RETENTION.
2. EXISTING CONDUITS STUBBED THROUGH THE FLOOR THAT ARE NOT REUSED OR ARE ABANDONED SHALL BE CUT AT THE FLOOR SURFACE, GROUND FLUSH AND FILLED WITH GROUT. FLOOR FINISH SHALL MATCH THAT OF EXISTING.
3. PROVIDE NEW CONDUCTORS IN EXISTING RACEWAYS THAT ARE FEASIBLE TO RE-USE. USE EXISTING BACKBOXES WITH NEW DEVICES IN APPROPRIATE AREAS.
4. ALL WORK SHALL BE PERFORMED IN STRICT ACCORDANCE WITH NEC, STATE AND LOCAL BUILDING CODE.
5. RETURN ANY USABLE/ SALVAGEABLE ELECTRICAL DEVICES TO OWNER INCLUDING BUT NOT LIMITED TO: LIGHT FIXTURES, ELECTRICAL HEATERS, PANELS, CIRCUIT BREAKERS ETC. CONFIRM WITH OWNER ITEMS THAT ARE DESIRABLE FOR RETENTION.
6. ALL DASHED ITEMS ON DEMOLITION PLANS AND PROVIDED WITH A (X) ARE TO BE REMOVED UNLESS NOTED OTHERWISE. SOLID ITEMS PROVIDED WITH AN (E) ARE TO REMAIN. NOTE – ITEMS SHOWN IN THE DEMOLITION PLANS ARE BASED ON "EXISTING AS-BUILTS". ADDITIONAL ELECTRICAL ITEMS MAY BE ENCOUNTERED THAT ARE NOT SHOWN.
7. ANY WORK THAT REQUIRES POWER DISRUPTIONS SHALL BE SCHEDULED AND APPROVED BY THE OWNER. ALL WORK SHALL BE PERFORMED WITH NO DISRUPTION OF THE OWNER'S BUSINESS.

CONSTRUCTION NOTES

1. REMOVE THE EXISTING LIGHT FIXTURE. KEEP THE EXISTING ELECTRICAL BACK BOX AND CONDUCTORS IN PLACE TO BE RE-USED BY THE NEW LIGHT FIXTURE SHOWN ON THE RESPECTIVE REMODEL PLAN.
2. REMOVE THE EXISTING LIGHT FIXTURE FROM THE ELECTRICAL BOX AND DISCONNECT THE EXISTING 20A, 120V CIRCUIT. PREP OPENING, AS REQUIRED, TO ACCEPT THE NEW LIGHT FIXTURE SHOWN ON THE REMODEL PLAN.
3. REMOVE THE EXISTING LIGHT FIXTURE FROM THE BOTTOM OF THE CANOPY. DISCONNECT THE LIGHT FIXTURE FROM THE EXISTING 20A, 120V CIRCUIT. REPAIR, PATCH AND PAINT, CANOPY AT THE EXISTING MOUNTING LOCATIONS. PREP SURFACE AND ELECTRICAL BOX TO ACCEPT THE NEW LIGHT FIXTURE SHOWN ON THE REMODEL PLAN.

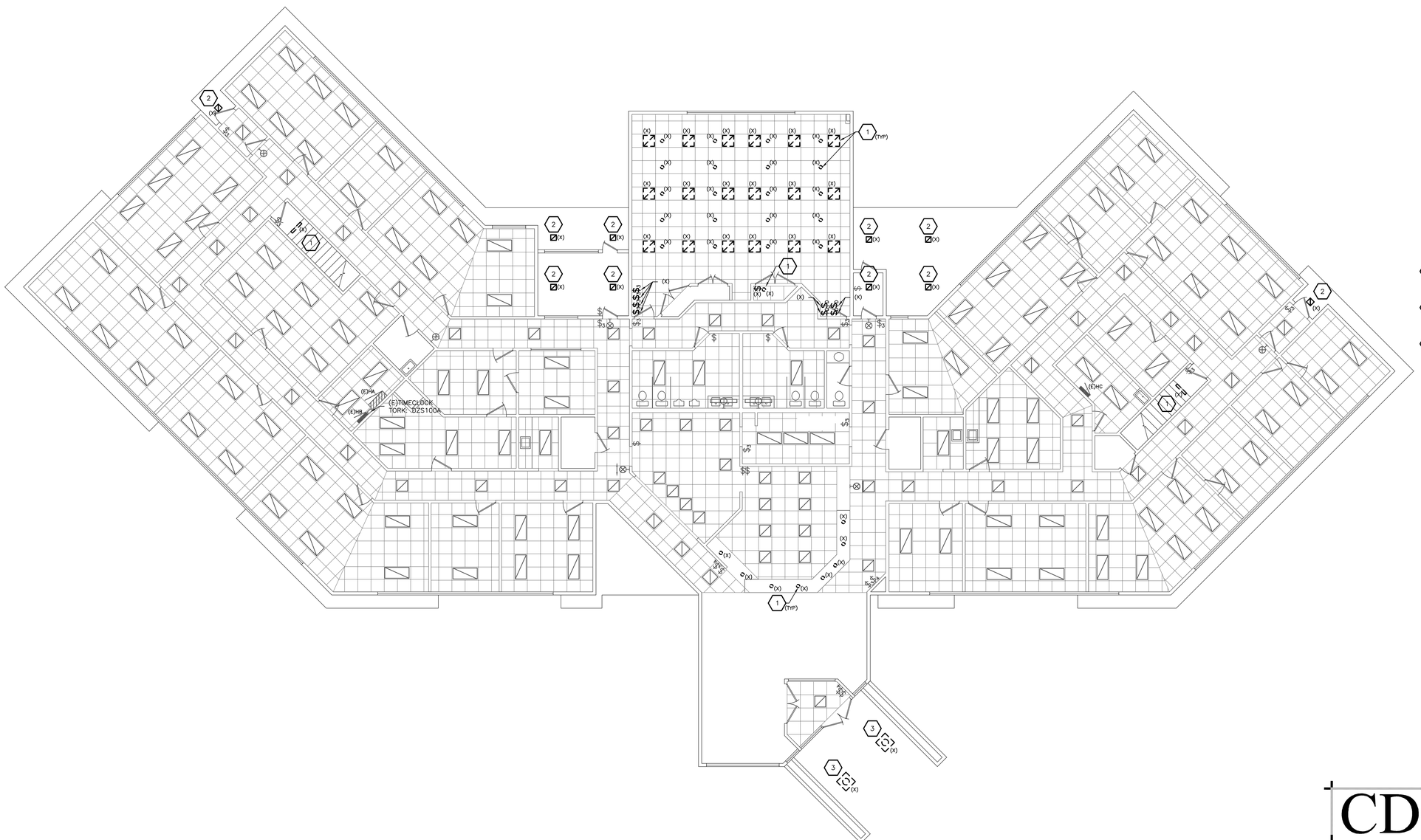

MAIN BUILDING FIRST FLOOR LIGHTING DEMOLITION PLAN (ALTERNATE #1)
SCALE: 1/8" = 1'-0"

Montana Fish, Wildlife & Parks

MONTANA FISH WILDLIFE AND PARKS
REGION 3 HQ LIGHTING UPGRADES
1400 SOUTH 19TH AVE, BOZEMAN, MT 59718

MAIN BUILDING FIRST FLOOR
LIGHTING DEMOLITION PLAN

CDS
CONSULTING DESIGN SOLUTIONS, INC.
ENGINEERING
7540 CHURCHILL RD MANHATTAN, MT 59741
PHONE: (406) 282 7082 FAX: (406) 282-7087

MONTANA
Scott T. Elders
No. 29029PE
LICENSED PROFESSIONAL ENGINEER

PROJECT: FWP# 7099408 , CDSI # 1322
DRAWN BY: STE
APPROVED: CDS
DATE: February 12, 2014 REVISED: .
SHEET NUMBER:
ED1.1

COORDINATION NOTE:

IT IS ABSOLUTELY NECESSARY FOR ALL TRADES INCLUDING EQUIPMENT SUPPLIERS TO COORDINATE WITH EACH OTHER AND TO VERIFY THAT THERE ARE NO CONFLICTS IN LOCATIONS OF DUCTS, CONDUITS, SPRINKLER HEADS, SPRINKLER PIPING, DIFFUSERS, ELECTRICAL BOXES AND OTHER ITEMS THROUGHOUT THIS PROJECT BEFORE FINAL PLACEMENT OF MATERIALS.

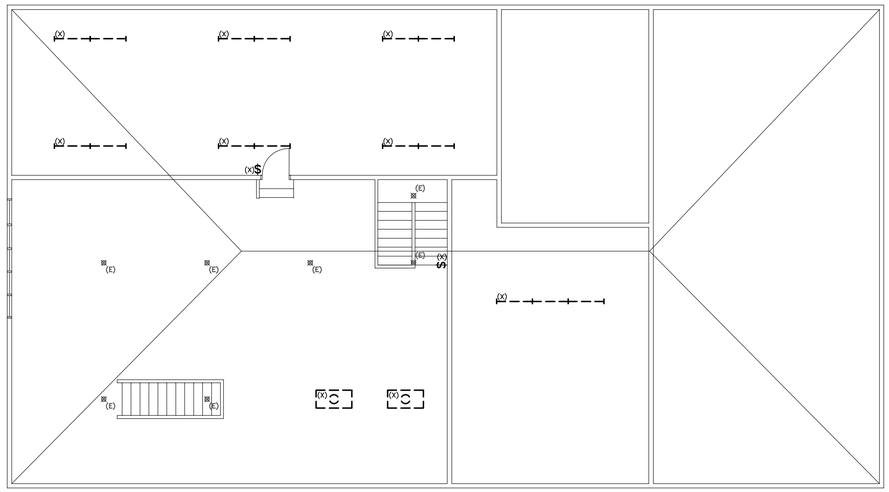

N SECOND FLOOR LAB/SHOP LIGHTING DEMOLITION PLAN (BASE BID)
SCALE: 1/8" = 1'-0"

GENERAL NOTES

1. ELECTRICAL CONTRACTOR SHALL REMOVE ALL ELECTRICAL DEVICES IN AREAS OF THIS FACILITY AFFECTED BY REMODEL WORK INCLUDING BUT NOT LIMITED TO: JUNCTION BOXES, OUTLETS, LIGHTS, CABLE, CONDUIT AND WIRE. ALL DEVICES MAY NOT BE SHOWN ON THIS SHEET AND SITE INVESTIGATION IS REQUIRED FOR EXACT QUANTITIES. CONFIRM DEMOLITION SCOPE AT PRE-BID WALK AND RECYCLE WHERE FEASIBLE. DISPOSE OF ALL FLUORESCENT LAMPS AND BALLASTS IN A LEGAL AND ENVIRONMENTALLY FRIENDLY MANNER. PROVIDE PROPER DISPOSAL DOCUMENTATION STATING ITEMS DISPOSED OF AND QUANTITY TO OWNER FOR RETENTION.
2. EXISTING CONDUITS STUBBED THROUGH THE FLOOR THAT ARE NOT REUSED OR ARE ABANDONED SHALL BE CUT AT THE FLOOR SURFACE, GROUND FLUSH AND FILLED WITH GROUT. FLOOR FINISH SHALL MATCH THAT OF EXISTING.
3. PROVIDE NEW CONDUCTORS IN EXISTING RACEWAYS THAT ARE FEASIBLE TO RE-USE. USE EXISTING BACKBOXES WITH NEW DEVICES IN APPROPRIATE AREAS.
4. ALL WORK SHALL BE PERFORMED IN STRICT ACCORDANCE WITH NEC, STATE AND LOCAL BUILDING CODE.
5. RETURN ANY USABLE/ SALVAGEABLE ELECTRICAL DEVICES TO OWNER INCLUDING BUT NOT LIMITED TO: LIGHT FIXTURES, ELECTRICAL HEATERS, PANELS, CIRCUIT BREAKERS ETC. CONFIRM WITH OWNER ITEMS THAT ARE DESIRABLE FOR RETENTION.
6. ALL DASHED ITEMS ON DEMOLITION PLANS AND PROVIDED WITH A (X) ARE TO BE REMOVED UNLESS NOTED OTHERWISE. SOLID ITEMS PROVIDED WITH AN (E) ARE TO REMAIN. NOTE – ITEMS SHOWN IN THE DEMOLITION PLANS ARE BASED ON "EXISTING AS-BUILTS". ADDITIONAL ELECTRICAL ITEMS MAY BE ENCOUNTERED THAT ARE NOT SHOWN.
7. ANY WORK THAT REQUIRES POWER DISRUPTIONS SHALL BE SCHEDULED AND APPROVED BY THE OWNER. ALL WORK SHALL BE PERFORMED WITH NO DISRUPTION OF THE OWNER'S BUSINESS.

CONSTRUCTION NOTES

1. REMOVE THE EXISTING LIGHT FIXTURE. KEEP THE EXISTING ELECTRICAL BACK BOX AND CONDUCTORS IN PLACE TO BE RE-USED BY THE NEW LIGHT FIXTURE SHOWN ON THE RESPECTIVE REMODEL PLAN.
2. REMOVE THE EXISTING LIGHT FIXTURE FROM THE ELECTRICAL BOX AND DISCONNECT THE EXISTING 20A, 120V CIRCUIT. PREP OPENING, AS REQUIRED, TO ACCEPT THE NEW LIGHT FIXTURE SHOWN ON THE REMODEL PLAN.

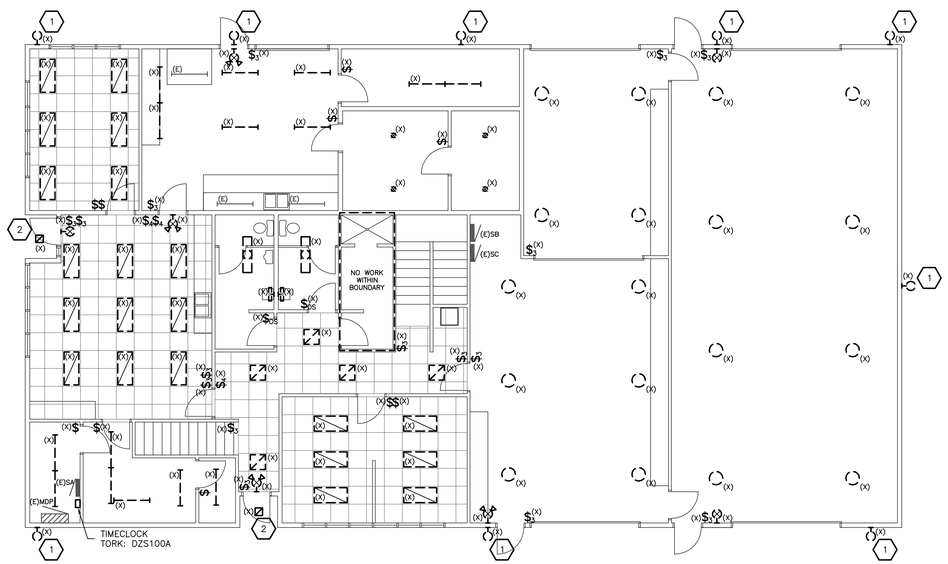

N FIRST FLOOR LAB/SHOP LIGHTING DEMOLITION PLAN (BASE BID)
SCALE: 1/8" = 1'-0"

Montana Fish, Wildlife & Parks

MONTANA FISH WILDLIFE AND PARKS
REGION 3 HQ LIGHTING UPGRADES
1400 SOUTH 19TH AVE, BOZEMAN, MT 59718

LAB/SHOP LIGHTING DEMOLITION PLANS

CDS
CONSULTING DESIGN SOLUTIONS, INC.
ENGINEERING
7540 CHURCHILL RD MANHATTAN, MT 59741
PHONE: (406) 282 7082 FAX: (406) 282-7087

MONTANA Scott T. Elders No. 29029PE PROFESSIONAL ENGINEER

PROJECT: FWP# 7099408 , CDSI # 1322
DRAWN BY: STE
APPROVED: CDS
DATE: February 12, 2014 REVISED:
SHEET NUMBER:
ED1.2

COORDINATION NOTE:

IT IS ABSOLUTELY NECESSARY FOR ALL TRADES INCLUDING EQUIPMENT SUPPLIERS TO COORDINATE WITH EACH OTHER AND TO VERIFY THAT THERE ARE NO CONFLICTS IN LOCATIONS OF DUCTS, CONDUITS, SPRINKLER HEADS, SPRINKLER PIPING, DIFFUSERS, ELECTRICAL BOXES AND OTHER ITEMS THROUGHOUT THIS PROJECT BEFORE FINAL PLACEMENT OF MATERIALS.

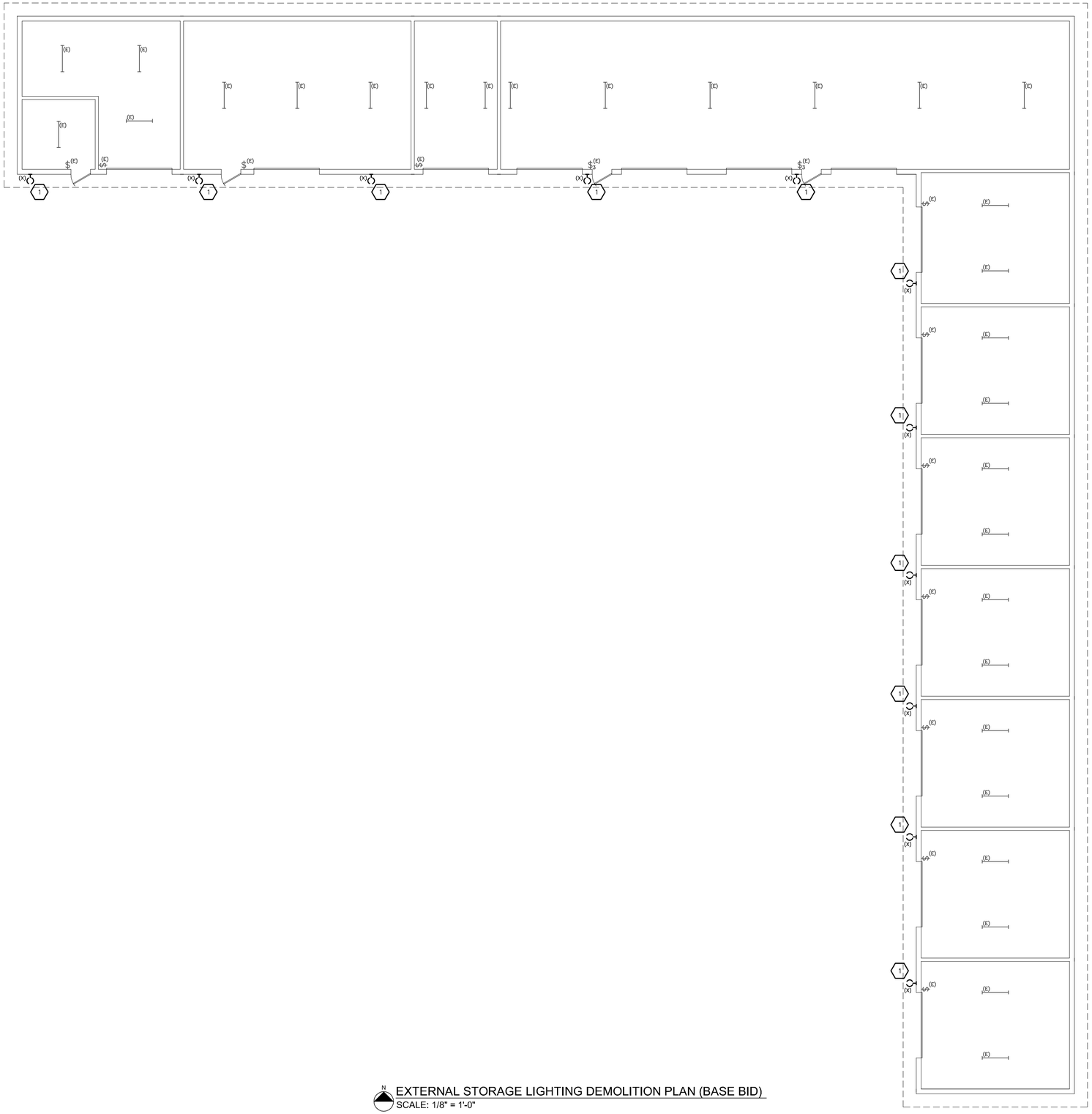

EXTERNAL STORAGE LIGHTING DEMOLITION PLAN (BASE BID)
SCALE: 1/8" = 1'-0"

GENERAL NOTES

1. ELECTRICAL CONTRACTOR SHALL REMOVE ALL ELECTRICAL DEVICES IN AREAS OF THIS FACILITY AFFECTED BY REMODEL WORK INCLUDING BUT NOT LIMITED TO: JUNCTION BOXES, OUTLETS, LIGHTS, CABLE, CONDUIT AND WIRE. ALL DEVICES MAY NOT BE SHOWN ON THIS SHEET AND SITE INVESTIGATION IS REQUIRED FOR EXACT QUANTITIES. CONFIRM DEMOLITION SCOPE AT PRE-BID WALK AND RECYCLE WHERE FEASIBLE. DISPOSE OF ALL FLUORESCENT LAMPS AND BALLASTS IN A LEGAL AND ENVIRONMENTALLY FRIENDLY MANNER. PROVIDE PROPER DISPOSAL DOCUMENTATION STATING ITEMS DISPOSED OF AND QUANTITY TO OWNER FOR RETENTION.
2. EXISTING CONDUITS STUBBED THROUGH THE FLOOR THAT ARE NOT REUSED OR ARE ABANDONED SHALL BE CUT AT THE FLOOR SURFACE, GROUND FLUSH AND FILLED WITH GROUT. FLOOR FINISH SHALL MATCH THAT OF EXISTING.
3. PROVIDE NEW CONDUCTORS IN EXISTING RACEWAYS THAT ARE FEASIBLE TO RE-USE. USE EXISTING BACKBOXES WITH NEW DEVICES IN APPROPRIATE AREAS.
4. ALL WORK SHALL BE PERFORMED IN STRICT ACCORDANCE WITH NEC, STATE AND LOCAL BUILDING CODE.
5. RETURN ANY USABLE/ SALVAGEABLE ELECTRICAL DEVICES TO OWNER INCLUDING BUT NOT LIMITED TO: LIGHT FIXTURES, ELECTRICAL HEATERS, PANELS, CIRCUIT BREAKERS ETC. CONFIRM WITH OWNER ITEMS THAT ARE DESIRABLE FOR RETENTION.
6. ALL DASHED ITEMS ON DEMOLITION PLANS AND PROVIDED WITH A (X) ARE TO BE REMOVED UNLESS NOTED OTHERWISE. SOLID ITEMS PROVIDED WITH AN (E) ARE TO REMAIN. NOTE – ITEMS SHOWN IN THE DEMOLITION PLANS ARE BASED ON "EXISTING AS-BUILTS". ADDITIONAL ELECTRICAL ITEMS MAY BE ENCOUNTERED THAT ARE NOT SHOWN.
7. ANY WORK THAT REQUIRES POWER DISRUPTIONS SHALL BE SCHEDULED AND APPROVED BY THE OWNER. ALL WORK SHALL BE PERFORMED WITH NO DISRUPTION OF THE OWNER'S BUSINESS.

CONSTRUCTION NOTES

1. REMOVE THE EXISTING LIGHT FIXTURE. KEEP THE EXISTING ELECTRICAL BACK BOX AND CONDUCTORS IN PLACE TO BE RE-USED BY THE NEW LIGHT FIXTURE SHOWN ON THE RESPECTIVE REMODEL PLAN.

Montana Fish, Wildlife & Parks

MONTANA FISH WILDLIFE AND PARKS
REGION 3 HQ LIGHTING UPGRADES
1400 SOUTH 19TH AVE, BOZEMAN, MT 59718

EXTERNAL STORAGE LIGHTING DEMOLITION PLAN

CDS
CONSULTING DESIGN SOLUTIONS, INC.
ENGINEERING
7540 CHURCHILL RD MANHATTAN, MT 59741
PHONE: (406) 282 7082 FAX: (406) 282-7087

MONTANA
Scott T. Elders
No. 29029PE
PROFESSIONAL ENGINEER

PROJECT: FWP# 7099408 , CDSI # 1322
DRAWN BY: STE
APPROVED: CDS
DATE: February 12, 2014 REVISED: .
SHEET NUMBER:
ED1.3

COORDINATION NOTE:

IT IS ABSOLUTELY NECESSARY FOR ALL TRADES INCLUDING EQUIPMENT SUPPLIERS TO COORDINATE WITH EACH OTHER AND TO VERIFY THAT THERE ARE NO CONFLICTS IN LOCATIONS OF DUCTS, CONDUITS, SPRINKLER HEADS, SPRINKLER PIPING, DIFFUSERS, ELECTRICAL BOXES AND OTHER ITEMS THROUGHOUT THIS PROJECT BEFORE FINAL PLACEMENT OF MATERIALS.

GENERAL NOTES

1. INSTALL ALL NEW WORK TO MEET CURRENT CODES AND INSTALLATION STANDARDS.
2. NEW CONDUCTORS SHALL BE COPPER AND A MINIMUM OF #12 GAUGE.
3. LIGHT FIXTURES SHOWN WITH A HEIGHT CALLOUT (XX") SHALL BE INSTALLED AS DESCRIBED HERE. THE HEIGHT CALLOUT SHALL BE THE DISTANCE FROM FINISHED FLOOR/GRADE TO THE BOTTOM OF THE RESPECTIVE LIGHT FIXTURE.
4. THE CIRCUITRY SHOWN IN A SOLID LINETYPE SHALL BE NORMAL POWER. THE CIRCUITRY SHOWN IN A DASHED LINETYPE SHALL BE LOW-VOLTAGE CABLING FOR THE LIGHTING CONTROLS. PROVIDE AND INSTALL PER MANUFACTURER'S REQUIREMENTS.
5. 0-10V LOW-VOLTAGE DIMMING CABLE IS NOT SHOWN ON THE PLANS. PROVIDE CABLING BETWEEN 0-10V DIMMER(S) AND THEIR RESPECTIVE DIMMING BALLAST(S) WHICH THEY CONTROL PER THE DIMMER MANUFACTURER'S REQUIREMENTS.
6. EMERGENCY BATTERY BALLAST(S) AND EXIT SIGNS SHALL BE PROVIDED WITH AN UN-SWITCHED HOT CONDUCTOR FROM THE SAME CIRCUIT AS THE RESPECTIVE SWITCH-LEG.

CONSTRUCTION NOTES

1. INSTALL THE NEW LIGHT FIXTURE(S), UTILIZING THE EXISTING 20A, 120V CIRCUIT AND ELECTRICAL BOX WITHIN THE EXISTING OPENING. SHIM, ENLARGE, PAINT, AND PATCH AS NECESSARY FOR A FLUSH INSTALLATION.
2. INSTALL THE NEW LIGHT FIXTURE(S), UTILIZING THE EXISTING 20A, 120V CIRCUIT AND ELECTRICAL BOX. PAINT, AND PATCH AS NECESSARY FOR A FLUSH AND CLEAN INSTALLATION.
3. PROVIDE AND INSTALL AN EVENLITE LITEMINDER 'LM-52-LC-V1-S4-ST-WB' EMERGENCY LIGHTING INVERTER PER THE EMERGENCY LIGHTING INVERTER WIRING DIAGRAM.
4. INSTALL THE NEW OCCUPANCY SENSOR WALL SENSOR WITHIN THE EXISTING ELECTRICAL BOX. RECONNECT TO THE EXISTING LIGHTING CIRCUIT.

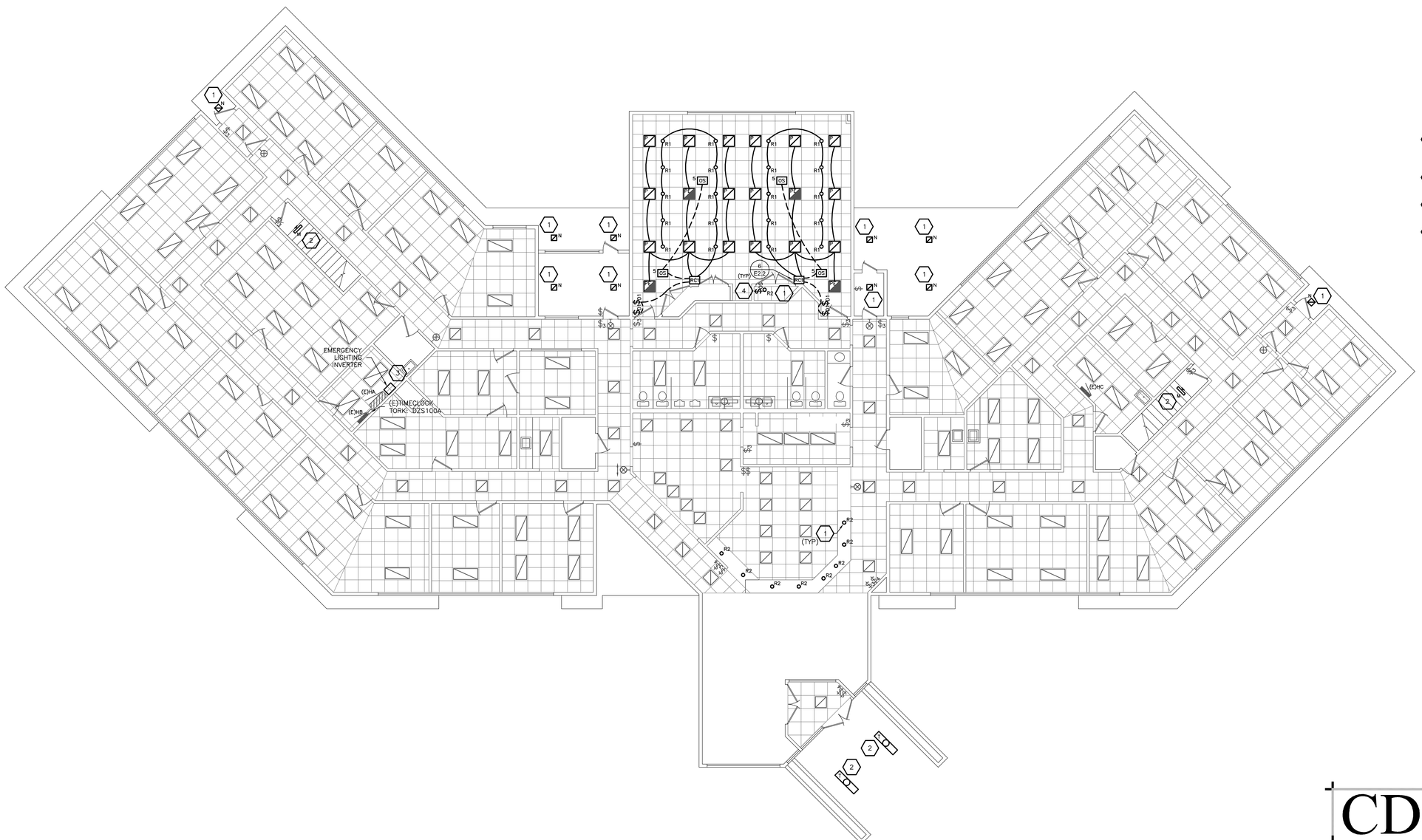

MAIN BUILDING FIRST FLOOR LIGHTING REMODEL PLAN (ALTERNATE #1)
SCALE: 1/8" = 1'-0"

Montana Fish, Wildlife & Parks

MONTANA FISH WILDLIFE AND PARKS
REGION 3 HQ LIGHTING UPGRADES
1400 SOUTH 19TH AVE, BOZEMAN, MT 59718

MAIN BUILDING FIRST FLOOR
LIGHTING REMODEL PLAN

CDS
CONSULTING DESIGN SOLUTIONS, INC.
ENGINEERING
7540 CHURCHILL RD MANHATTAN, MT 59741
PHONE: (406) 282 7082 FAX: (406) 282-7087

Scott T. Elders No. 29029PE

PROJECT: FWP# 7099408 , CDSI # 1322
DRAWN BY: STE
APPROVED: CDS
DATE: February 12, 2014 REVISED: .
SHEET NUMBER:
E1.1

COORDINATION NOTE:

IT IS ABSOLUTELY NECESSARY FOR ALL TRADES INCLUDING EQUIPMENT SUPPLIERS TO COORDINATE WITH EACH OTHER AND TO VERIFY THAT THERE ARE NO CONFLICTS IN LOCATIONS OF DUCTS, CONDUITS, SPRINKLER HEADS, SPRINKLER PIPING, DIFFUSERS, ELECTRICAL BOXES AND OTHER ITEMS THROUGHOUT THIS PROJECT BEFORE FINAL PLACEMENT OF MATERIALS.

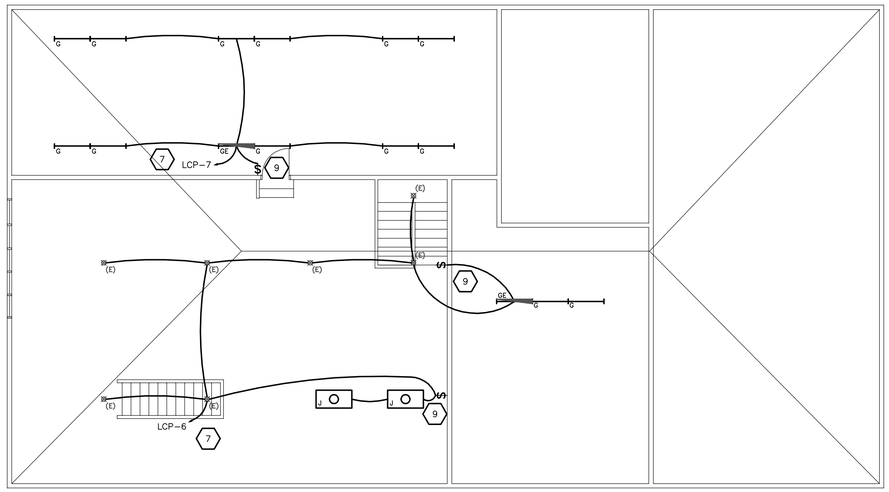

N SECOND FLOOR LAB/SHOP LIGHTING REMODEL PLAN (BASE BID)
SCALE: 1/8" = 1'-0"

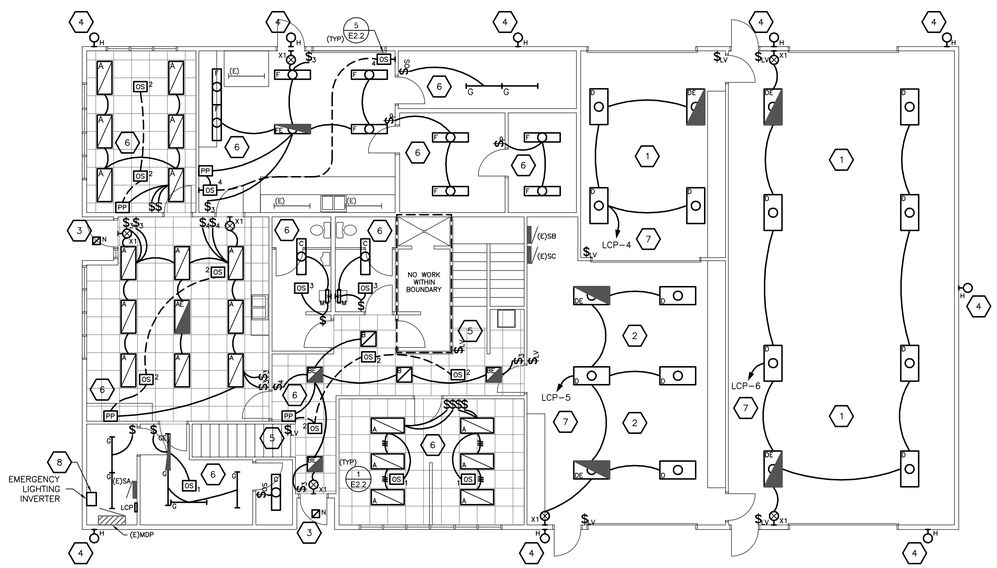

N FIRST FLOOR LAB/SHOP LIGHTING REMODEL PLAN (BASE BID)
SCALE: 1/8" = 1'-0"

GENERAL NOTES

1. INSTALL ALL NEW WORK TO MEET CURRENT CODES AND INSTALLATION STANDARDS.
2. NEW CONDUCTORS SHALL BE COPPER AND A MINIMUM OF #12 GAUGE.
3. LIGHT FIXTURES SHOWN WITH A HEIGHT CALLOUT (XX") SHALL BE INSTALLED AS DESCRIBED HERE. THE HEIGHT CALLOUT SHALL BE THE DISTANCE FROM FINISHED FLOOR/GRADE TO THE BOTTOM OF THE RESPECTIVE LIGHT FIXTURE.
4. THE CIRCUITRY SHOWN IN A SOLID LINETYPE SHALL BE NORMAL POWER. THE CIRCUITRY SHOWN IN A DASHED LINETYPE SHALL BE LOW-VOLTAGE CABLING FOR THE LIGHTING CONTROLS. PROVIDE AND INSTALL PER MANUFACTURER'S REQUIREMENTS.
5. EMERGENCY BATTERY BALLAST(S) AND EXIT SIGNS SHALL BE PROVIDED WITH AN UN-SWITCHED HOT CONDUCTOR FROM THE SAME CIRCUIT AS THE RESPECTIVE SWITCH-LEG.
6. THE EXISTING LIGHTING CIRCUIT SHALL BE RE-USED FOR EACH OF THE RESPECTIVE ROOMS. WHERE LIGHTING CONTROL PANEL (LCP-X) CIRCUITS ARE DESIGNATED THE EXISTING LIGHTING CIRCUIT SHALL BE RE-USED BUT NOW CONTROLLED BY THE LIGHTING CONTROL PANEL. REFER TO THE LIGHTING CONTROL PANEL SCHEDULES.
7. CONNECT THE LIGHTING CONTROL PANEL AND THE LOW-VOLTAGE MANUAL WALL SWITCHES TOGETHER UTILIZING THE REQUIRED CABLE AND CABLING TECHNIQUES AS REQUIRED BY THE MANUFACTURER.
8. THE LOW-VOLTAGE 'LV' SWITCHES SHOWN WITHIN THE BUILDING SHALL BE CONNECTED TO THE LIGHTING CONTROL PANEL 'LCP' BY CAT5E CABLE ACCORDING TO THE MANUFACTURERS INSTALLATION REQUIREMENTS. THE LOW-VOLTAGE SWITCHES SHALL CONTROL THE RELAY(S) WITHIN THEIR RESPECTIVE ROOM.

CONSTRUCTION NOTES

1. MOUNT NEW LIGHT FIXTURES TO THE EXISTING UNI-STRUT SUSPENDED IN THE SPACE. RE-CONFIGURE EXISTING CONDUIT RUNS AS REQUIRED TO CONNECT THE NEW LIGHT FIXTURES.
2. SURFACE MOUNT LIGHT FIXTURES TO THE HARD GYP. CEILING. CONTRACTOR TO COORDINATE EXACT LIGHT FIXTURE LOCATIONS WITH EXISTING MECHANICAL EQUIPMENT AND EXISTING OVERHEAD DOOR EQUIPMENT. PROVIDE UNI-STRUT BACKING AS REQUIRED TO MOUNT THE LIGHT FIXTURE OVER SURFACE MOUNTED ELECTRICAL BOXES.
3. INSTALL THE NEW LIGHT FIXTURE(S), UTILIZING THE EXISTING 20A, 120V CIRCUIT AND ELECTRICAL BOX WITHIN THE EXISTING OPENING. SHIM, ENLARGE, PAINT, AND PATCH AS NECESSARY FOR A FLUSH INSTALLATION.THE EXISTING BUILDING MOUNTED EXTERIOR LIGHTING CIRCUIT SHALL BE ROUTED THROUGH THE NEW LIGHTING CONTROL PANEL FOR CONTROL. REFER TO THE LIGHTING CONTROL PANEL SCHEDULE.
4. INSTALL THE NEW LIGHT FIXTURE(S), UTILIZING THE EXISTING 20A, 120V CIRCUIT AND ELECTRICAL BOX. PAINT, AND PATCH AS NECESSARY FOR A FLUSH AND CLEAN INSTALLATION. THE EXISTING BUILDING MOUNTED EXTERIOR LIGHTING CIRCUIT SHALL BE ROUTED THROUGH THE NEW LIGHTING CONTROL PANEL FOR CONTROL. REFER TO THE LIGHTING CONTROL PANEL SCHEDULE.
5. NOT USED.
6. UTILIZE THE 20A, 120V CIRCUIT THAT WAS PREVIOUSLY UTILIZED FOR THE EXISTING LIGHTING WITHIN THE SPACE. WIRE LIGHTING CONTROLS AND LIGHTS PER THE CIRCUITING SHOWN ON THE DRAWING(S) AND THE APPLICABLE DETAILS.
7. UTILIZE THE 20A, 120V CIRCUIT THAT WAS PREVIOUSLY UTILIZED FOR THE EXISTING LIGHTING WITHIN THE SPACE. ROUTE THE EXISTING CIRCUIT THROUGH THE NEW LIGHTING CONTROL PANEL (LCP) AND WIRE LIGHTING CONTROLS AND LIGHTS PER THE CIRCUITING SHOWN ON THE DRAWING(S) AND THE APPLICABLE DETAILS.
8. PROVIDE AND INSTALL AN EVENLITE LITEMINDER 'LM-52-LC-V1-S4-ST-WB' EMERGENCY LIGHTING INVERTER PER THE EMERGENCY LIGHTING INVERTER WIRING DIAGRAM.
9. LOCAL SWITCHES SHALL BE OVERRIDDEN BY LIGHTING CONTROL PANEL RELAY. EITHER MANUAL SWITCH AT THE BOTTOM OF THE STAIRS SHALL TURN ON BOTH OF THE ATTIC RELAYS. THE ATTIC RELAYS SHALL THEN ENERGIZE EACH OF THE 20A TOGGLE SWITCH(ES) TO TURN ON THEIR RESPECTIVE LIGHTS.

Montana Fish, Wildlife & Parks

MONTANA FISH WILDLIFE AND PARKS
REGION 3 HQ LIGHTING UPGRADES
1400 SOUTH 19TH AVE, BOZEMAN, MT 59718

LAB/SHOP LIGHTING REMODEL PLANS

CDS
CONSULTING DESIGN SOLUTIONS, INC.
ENGINEERING
7540 CHURCHILL RD MANHATTAN, MT 59741
PHONE: (406) 282 7082 FAX: (406) 282-7087

MONTANA
Scott T. Elders
No. 29029PE
PROFESSIONAL ENGINEER

PROJECT: FWP# 7099408 , CDSI # 1322
DRAWN BY: STE
APPROVED: CDS
DATE: February 12, 2014 REVISED:
SHEET NUMBER:
E1.2

COORDINATION NOTE:

IT IS ABSOLUTELY NECESSARY FOR ALL TRADES INCLUDING EQUIPMENT SUPPLIERS TO COORDINATE WITH EACH OTHER AND TO VERIFY THAT THERE ARE NO CONFLICTS IN LOCATIONS OF DUCTS, CONDUITS, SPRINKLER HEADS, SPRINKLER PIPING, DIFFUSERS, ELECTRICAL BOXES AND OTHER ITEMS THROUGHOUT THIS PROJECT BEFORE FINAL PLACEMENT OF MATERIALS.

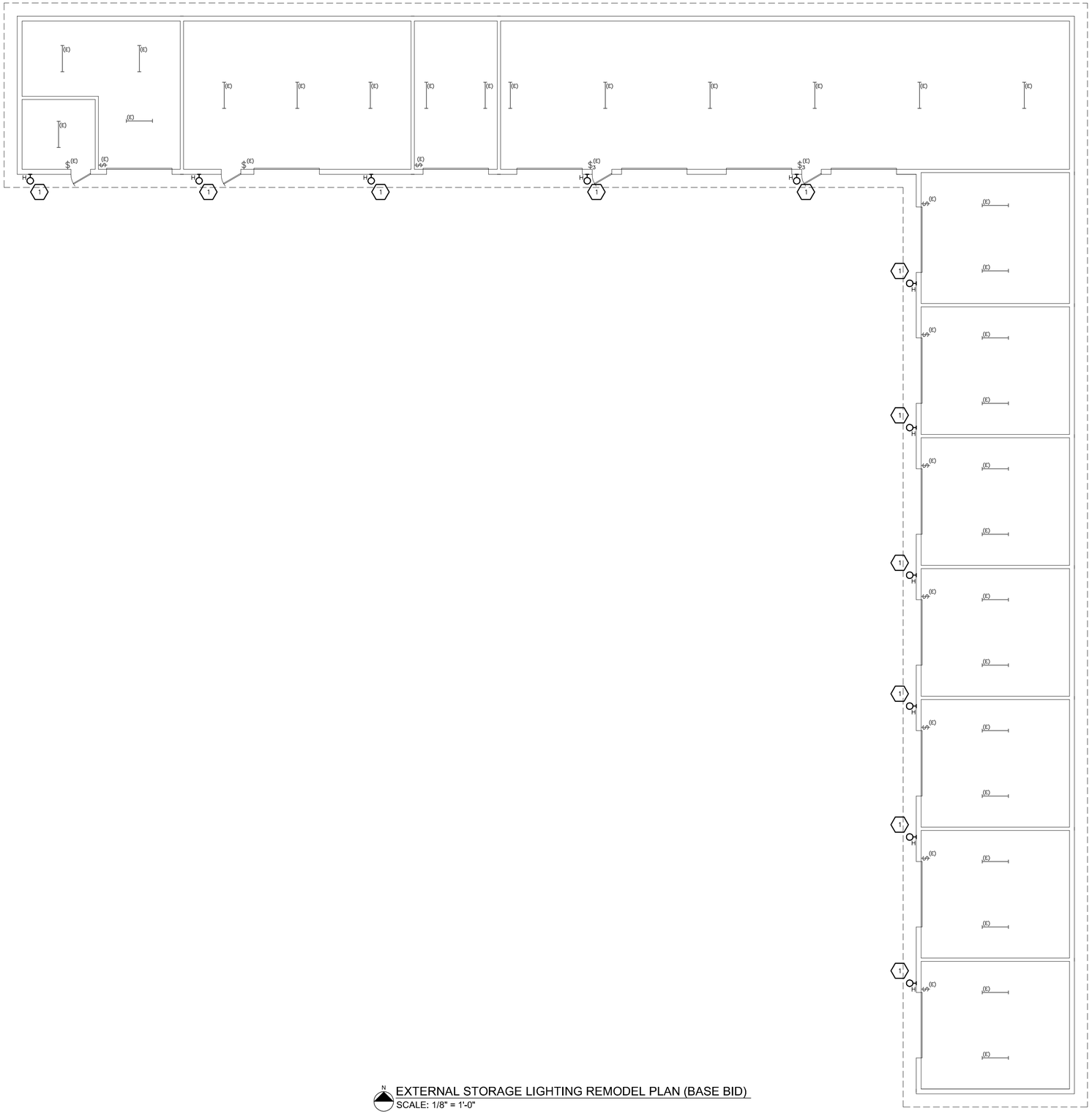

EXTERNAL STORAGE LIGHTING REMODEL PLAN (BASE BID)
SCALE: 1/8" = 1'-0"

GENERAL NOTES

1. INSTALL ALL NEW WORK TO MEET CURRENT CODES AND INSTALLATION STANDARDS.
2. NEW CONDUCTORS SHALL BE COPPER AND A MINIMUM OF #12 GAUGE.
3. LIGHT FIXTURES SHOWN WITH A HEIGHT CALLOUT (XX") SHALL BE INSTALLED AS DESCRIBED HERE. THE HEIGHT CALLOUT SHALL BE THE DISTANCE FROM FINISHED FLOOR/GRADE TO THE BOTTOM OF THE RESPECTIVE LIGHT FIXTURE.
4. EMERGENCY BATTERY BALLAST(S) AND EXIT SIGNS SHALL BE PROVIDED WITH AN UN-SWITCHED HOT CONDUCTOR FROM THE SAME CIRCUIT AS THE RESPECTIVE SWITCH-LEG.

CONSTRUCTION NOTES

1. INSTALL THE NEW LIGHT FIXTURE(S), UTILIZING THE EXISTING 20A, 120V CIRCUIT AND ELECTRICAL BOX. PAINT, AND PATCH AS NECESSARY FOR A FLUSH AND CLEAN INSTALLATION. THE EXISTING BUILDING MOUNTED EXTERIOR LIGHTING CIRCUIT SHALL BE ROUTED THROUGH THE NEW LIGHTING CONTROL PANEL FOR CONTROL. REFER TO THE LIGHTING CONTROL PANEL SCHEDULE.

Montana Fish, Wildlife & Parks

MONTANA FISH WILDLIFE AND PARKS
REGION 3 HQ LIGHTING UPGRADES
1400 SOUTH 19TH AVE, BOZEMAN, MT 59718

EXTERNAL STORAGE LIGHTING REMODEL PLAN

CDS
CONSULTING DESIGN SOLUTIONS, INC.
ENGINEERING
7540 CHURCHILL RD MANHATTAN, MT 59741
PHONE: (406) 282 7082 FAX: (406) 282-7087

MONTANA
Scott T. Elders
No. 29029PE
PROFESSIONAL ENGINEER

PROJECT: FWP# 7099408 , CDSI # 1322
DRAWN BY: STE
APPROVED: CDS
DATE: February 12, 2014 REVISED: .
SHEET NUMBER:
E1.3

COORDINATION NOTE:

IT IS ABSOLUTELY NECESSARY FOR ALL TRADES INCLUDING EQUIPMENT SUPPLIERS TO COORDINATE WITH EACH OTHER AND TO VERIFY THAT THERE ARE NO CONFLICTS IN LOCATIONS OF DUCTS, CONDUITS, SPRINKLER HEADS, SPRINKLER PIPING, DIFFUSERS, ELECTRICAL BOXES AND OTHER ITEMS THROUGHOUT THIS PROJECT BEFORE FINAL PLACEMENT OF MATERIALS.

LIGHT FIXTURE SCHEDULE

TYPE (XX)	CATALOG NUMBER:	LAMP:	MOUNTING:	BALLAST/DRIVER:	VOLTAGE:	INPUT WATT:	DESCRIPTION:
TYPE (A)	DAY-BRITE: 2STG232-PMW-120-1/2-EBSD OR PRIOR APPROVED EQUIVALENT	F32T8 '835'	RECESSED	PROGRAM START ELECTRONIC	120	58	2 LAMP, 2'x4' RECESSED VOLUMETRIC LIGHT FIXTURE WITH A PROGRAM START, STEP-DIMMING, ELECTRONIC BALLAST.
TYPE (AE)	DAY-BRITE: 2STG232-PMW-120-1/2-EBSD-E5 OR PRIOR APPROVED EQUIVALENT	F32T8 '835'	RECESSED	PROGRAM START ELECTRONIC	120	58	2 LAMP, 2'x4' RECESSED VOLUMETRIC LIGHT FIXTURE WITH A PROGRAM START, STEP-DIMMING, ELECTRONIC BALLAST. PROVIDE WITH A 1400 LUMEN EMERGENCY BATTERY BALLAST.
TYPE (B)	DAY-BRITE: 2STG217-PMW-120-1/2-EB10R OR PRIOR APPROVED EQUIVALENT	F17T8 '835'	RECESSED	PROGRAM START ELECTRONIC	120	31	2 LAMP, 2'x2' RECESSED VOLUMETRIC LIGHT FIXTURE WITH A PROGRAM START ELECTRONIC BALLAST.
TYPE (BE)	DAY-BRITE: 2STG217-PMW-120-1/2-EB10R-E5 OR PRIOR APPROVED EQUIVALENT	F17T8 '835'	RECESSED	PROGRAM START ELECTRONIC	120	31	2 LAMP, 2'x2' RECESSED VOLUMETRIC LIGHT FIXTURE WITH A PROGRAM START ELECTRONIC BALLAST.
TYPE (C)	LSI: WNA14 2 32 SSOR UE LITHONIA: LB 2 32 MVOLT GEB10PS OR PRIOR APPROVED EQUIVALENT	F32T8 '835'	SURFACE	PROGRAM START ELECTRONIC	120	58	2 LAMP, 4' WRAPAROUND LIGHT FIXTURE WITH AN ACRYLIC LENS AND A PROGRAM START ELECTRONIC BALLAST.
TYPE (D)	LSI: IMS 4 32 SSOR OCS U LM835 UE LITHONIA: FGB164 4 32 B1D20U NLWG MVOLT GEB10PS LP835 PAF OR PRIOR APPROVED EQUIVALENT	F32T8 '835'	SURFACE/ UNI-STRUT	PROGRAM START ELECTRONIC	120	116	4 LAMP, 16"x4' FLUORESCENT HIGH-BAY LIGHT FIXTURE WITH A WIREGAURD AND A 2-LAMP PROGRAM START ELECTRONIC BALLAST. ONE (1) 2-LAMP BALLAST SHALL OPERATE THE INBOARD LAMPS, ONE (1) 2-LAMP BALLAST SHALL OPERATE THE OUTBOARD LAMPS.
TYPE (DE)	LSI: IMS 4 32 SSOR OCS U LM835 EMB50 UE LITHONIA: FGB164 4 32 B1D20U NLWG 120 GEB10PS LP835 PAF MSU360 EL14 OR PRIOR APPROVED EQUIVALENT	F32T8 '835'	SURFACE/ UNI-STRUT	PROGRAM START ELECTRONIC	120	116	4 LAMP, 16"x4' FLUORESCENT HIGH-BAY LIGHT FIXTURE WITH A WIREGAURD AND A 2-LAMP PROGRAM START ELECTRONIC BALLAST. ONE (1) 2-LAMP BALLAST SHALL OPERATE THE INBOARD LAMPS, ONE (1) 2-LAMP BALLAST SHALL OPERATE THE OUTBOARD LAMPS. PROVIDE WITH A 1400 LUMEN EMERGENCY BATTERY BALLAST AND PRE-WIRE WITH A 360 DEGREE OCCUPANCY SENSOR.
TYPE (F)	LSI: EG 2 54 SS5HO WL 120 LITHONIA: DMW 2 54T5HO MVOLT GEB10PS STSL OR PRIOR APPROVED EQUIVALENT	F54T5HO '835'	SURFACE	PROGRAM START ELECTRONIC	120	118	2 LAMP, 4' WRAPAROUND LIGHT FIXTURE ENCLOSED AND GASKETED WITH A HIGH IMPACT ACRYLIC LENS AND A PROGRAM START ELECTRONIC BALLAST.
TYPE (FE)	LSI: EG 2 54 SS5HO WL EMDL 120 LITHONIA: DMW 2 54T5HO MVOLT GEB10PS STSL EL14DW OR PRIOR APPROVED EQUIVALENT	F54T5HO '835'	SURFACE	PROGRAM START ELECTRONIC	120	118	2 LAMP, 4' WRAPAROUND LIGHT FIXTURE ENCLOSED AND GASKETED WITH A HIGH IMPACT ACRYLIC LENS, PROGRAM START ELECTRONIC BALLAST AND A 1400 LUMEN EMERGENCY BATTERY BALLAST.
TYPE (G)	LSI: S 2 32 SSOR UE WG240 LITHONIA: UNS 2 32 MVOLT GEB10PS WG OR PRIOR APPROVED EQUIVALENT	F32T8 '835'	SURFACE	PROGRAM START ELECTRONIC	120	58	2 LAMP, 4' STRIP LIGHT FIXTURE WITH A WIREGAURD AND A PROGRAM START ELECTRONIC BALLAST.
TYPE (GE)	LSI: S 2 32 SSOR UE WG240 EM LITHONIA: UNS 2 32 MVOLT GEB10PS WG EL14 OR PRIOR APPROVED EQUIVALENT	F32T8 '835'	SURFACE	PROGRAM START ELECTRONIC	120	58	2 LAMP, 4' STRIP LIGHT FIXTURE WITH A WIREGAURD, A 1400 LUMEN EMERGENCY BATTERY BALLAST AND A PROGRAM START ELECTRONIC BALLAST.
TYPE (H)	LSI: XPWS3 WT LED 28 350 NW UE BRZ OR PRIOR APPROVED EQUIVALENT	28 LEDS '4000K'	WALL	350 mA ELECTRONIC DRIVER	120	34	EXTERIOR LED WALL SCONCE WITH A 350mA LED DRIVER. PROVIDE IN BRONZE.
TYPE (J)	LITHONIA: 2M 2 32 A12125 MVOLT GEB10PS OR PRIOR APPROVED EQUIVALENT	F32T8 '835'	CHAIN-HUNG	PROGRAM START ELECTRONIC	120	58	2 LAMP, 2'x4' CHAIN-HUNG LIGHT FIXTURE WITH A STEEL ENCLOSURE AND ACRYLIC LENS. PROVIDE WITH A PROGRAM START ELECTRONIC BALLAST.
TYPE (M)	LITHONIA: W 2 17 MVOLT GEB10RS MW OR PRIOR APPROVED EQUIVALENT	F17T8 '835'	WALL MOUNT	PROGRAM START ELECTRONIC	120	31	2 LAMP, 2' WALL MOUNT LIGHT FIXTURE WITH AN EXTRUDED ALUMINUM HOUSING AND ACRYLIC LENS. NO WOODGRAIN TRIM. PROVIDE WITH A PROGRAM START ELECTRONIC BALLAST.
TYPE (N)	DALUME: DRL11-15-UE-41K-RM OR PRIOR APPROVED EQUIVALENT	LED '4100K'	RECESS	350 mA ELECTRONIC DRIVER	120	15	1'x1' LED RECESS MOUNT LIGHT FIXTURE. STEEL HOUSING WITH WHITE ACRYLIC LENS. PROVIDE WITH A 350 mA ELECTRONIC LED DRIVER.
TYPE (P)	DAY-BRITE: 2STG217-PMW-120-1/2-EBD OR PRIOR APPROVED EQUIVALENT	F17T8 '835'	RECESSED	0-10V DIM ELECTRONIC	120	31	2 LAMP, 2'x2' RECESSED VOLUMETRIC LIGHT FIXTURE WITH A 0-10V DIMMING ELECTRONIC BALLAST.
TYPE (PE)	DAY-BRITE: 2STG217-PMW-120-1/2-EBD-E5 OR PRIOR APPROVED EQUIVALENT	F17T8 '835'	RECESSED	0-10V DIM ELECTRONIC	120	31	2 LAMP, 2'x2' RECESSED VOLUMETRIC LIGHT FIXTURE WITH A 0-10V DIMMING ELECTRONIC BALLAST. PROVIDE WITH A 1100 LUMEN EMERGENCY BATTERY BALLAST.
TYPE (R1)	LITON: LHALD625C071UE-D10/LRALD6WWF-101 OR PRIOR APPROVED EQUIVALENT	LED '3500K'	RECESSED	0-10V DIMMING ELECTRONIC DRIVER	120	19	6" RECESSED LED DOWNLIGHT WITH A 0-10V DIMMING ELECTRONIC DRIVER. PROVIDE WITH A WHITE REFLECTOR AND A WHITE FLANGE.
TYPE (R2)	LITON: LHALD625C071UE/LRALD6WWF-101 OR PRIOR APPROVED EQUIVALENT	LED '3500K'	RECESSED	ELECTRONIC DRIVER	120	19	6" RECESSED LED DOWNLIGHT WITH A ELECTRONIC DRIVER. PROVIDE WITH A WHITE REFLECTOR AND A WHITE FLANGE.
TYPE (T)	LUMINAIRE: VPF84-56WHP-4000K-120-OP-CUST OR PRIOR APPROVED EQUIVALENT	LED '4000K'	SURFACE	350 mA ELECTRONIC DRIVER	120	56	4' VANDAL RESISTANT LED CEILING MOUNT LIGHT FIXTURE WITH A 350mA ELECTRONIC DRIVER. PROVIDE WITH A OPAL REFLECTOR AND GREEN HOUSING TO MATCH THE EXISTING CANOPY.
TYPE (X1)	CHLORIDE: CXXL3RW OR PRIOR APPROVED EQUAL	LED	UNIV. MOUNTING (WALL, SIDE, OR CEILING)	LED DRIVER	120	<5	WHITE EXIT SIGN WITH A THERMOPLASTIC HOUSING AND RED STENCIL LETTERS. PROVIDE WITH A NICKEL CADMIUM BATTERY AND SELF-DIAGNOSTICS.

ELECTRICAL LEGEND (NOT ALL SYMBOLS ARE USED ON THIS PROJECT)

- 2'X4' RECESSED LIGHT FIXTURE
- 2'X2' RECESSED LIGHT FIXTURE
- 1'X4' SURFACE MOUNT LIGHT FIXTURE
- 4' INDUSTRIAL STRIP LIGHT FIXTURE
- SUSPENDED LINEAR LIGHT FIXTURE
- WALL MOUNT LIGHT FIXTURE
- RECESSED DOWNLIGHT
- CEILING MOUNTED EXIT SIGN, ARROWS SHOWN SHALL BE PROVIDED ON EXIT SIGN INSTALLED
- $ SINGLE POLE TOGGLE SWITCH
- $3 THREE-WAY TOGGLE SWITCH
- $4 FOUR-WAY TOGGLE SWITCH
- $OS OCC. SENSOR SWITCH: WATTSTOPPER 'DW-100' OR APPROVED EQUAL.
- $LV LOW-VOLTAGE SWITCH 1; WATTSTOPPER LOW-VOLTAGE 'LMSW-102' SERIES.
- OS1 OCCUPANCY SENSOR – DUAL TECH: PROVIDE A WATTSTOPPER 'DT-355' OR APPROVED EQUAL.
- OS2 OCCUPANCY SENSOR – DUAL TECH: PROVIDE A WATTSTOPPER 'DT-305' OR APPROVED EQUAL.
- OS3 OCCUPANCY SENSOR – ULTRASONIC: PROVIDE A WATTSTOPPER 'UT-355' OR APPROVED EQUAL
- OS4 OCCUPANCY SENSOR – DUAL TECH: PROVIDE A WATTSTOPER 'DT-200' OR APPROVED EQUAL. MOUNT AT 8'-6" AFF.
- PP OCCUPANCY SENSOR POWER PACK: PROVIDE CORRECT TYPE AND QUANTITY PER THE RESPECTIVE OCCUPANCY SENSORS SHOWN.
- $D1 DIMMER SWITCH 1: WATTSTOPPER DLM 'LMDM-101' DIG. DIMMING WALL SWITCH
- RC ROOM CONTROLLER #1: PROVIDE A WATTSTOPPER 'LMRC-212' OR APPROVED EQUAL.
- OS5 OCCUPANCY SENSOR – DUAL TECH: PROVIDE A WATTSTOPPER 'LMDC-100' OR APPROVED EQUAL.
- DUPLEX RECEPTACLE
- HORIZONTALLY MOUNTED DUPLEX RECEPTACLE
- 30A DRYER RECEPTACLE
- 50A RANGE RECEPTACLE
- QUADRAPLEX RECEPTACLE
- CEILING MOUNTED RECEPTACLE
- GFI INDICATES GROUND FAULT INTERRUPTER DEVICE
- P/D FLOOR RECEPTACLE – COMBINATION POWER/DATA
- D POWER DIRECT CONNECTION
- POWER MOTOR CONNECTION
- ELECTRICAL PANEL – 208Y/120V 3 PHASE 4 WIRE
- J JUNCTION BOX – MINIMUM OF 4" SQUARE ELECTRICAL BOX
- COMBINATION VOICE/DATA OUTLET – PROVIDE WITH BLANK COVERPLATE
- VOICE OUTLET – PROVIDE WITH BLANK COVERPLATE
- CR CARD READER ROUGH-IN
- BRANCH CIRCUIT CONCEALED IN WALL OR CEILING
- BRANCH CIRCUIT CONCEALED IN OR UNDER FLOOR
- EMPTY CONDUIT – 3/4" UNLESS NOTED OTHERWISE
- HOME RUN TO PANEL. NUMBER OF ARROWS INDICATES NUMBER OF CIRCUITS.
- NUMBER OF HASHMARKS INDICATES NUMBER OF CONDUCTORS, NO HASHMARKS INDICATES TWO CONDUCTORS. HASHMARKS NOT SHOWN FOR GROUND WIRES.
- F FIRE ALARM MANUAL PULL STATION
- FH FIRE ALARM HORN/STROBE – WALL MOUNTED
- FS FIRE ALARM STROBE – WALL MOUNTED
- FH FIRE ALARM HORN – WALL MOUNTED
- FH FIRE ALARM HORN/STROBE – CEILING MOUNTED
- FS FIRE ALARM STROBE – CEILING MOUNTED
- S FIRE ALARM SMOKE DETECTOR
- H FIRE ALARM HEAT DETECTOR
- DSD FIRE ALARM DUCT SMOKE DETECTOR
- FACP FIRE ALARM CONTROL PANEL (FACP)
- FARA FIRE ALARM REMOTE ANNUNCIATOR (FARA)
- R FIRE ALARM RELAY
- M FIRE ALARM MAGNETIC DOOR HOLD

ABBREVIATIONS

AC	ABOVE COUNTER
ADA	AMERICANS W/ DISABILITIES ACT COMPLIANT EQUIPMENT
AD	ACCESS DOOR
AFF	ABOVE FINISHED FLOOR
AHU	AIR HANDLING UNIT
BKR, CB	CIRCUIT BREAKER
CLNG	CEILING
CONT	CONTINUATION
DDC	DIRECT DIGITAL CONTROL
DF	DRINKING FOUNTAIN
DISC	DISCONNECT SWITCH
E.C., EC	ELECTRICAL CONTRACTOR
(E)	EXISTING TO REMAIN
EF	EXHAUST FAN
ELECT	ELECTRICAL
EPO	EMERGENCY POWER OFF
EWC	ELECTRIC WATER COOLER
FCO	FLOOR CLEANOUT
FCU	FAN COIL UNIT
FD	FLOOR DRAIN
FD	FIRE DAMPER
FD/SD	FIRE/SMOKE DAMPER
FE	FIRE EXTINGUISHER
FS	FLOOR SINK
GFCI, GFI	GROUND FAULT CIRCUIT INTERRUPTER
GND	GROUND
HO H.O.	HIGH OUTPUT
IG	INSULATED GROUND
LTS	LIGHTS
MECH	MECHANICAL
MC, M.C.	MECHANICAL CONTRACTOR
MDB	MAIN DISTRIBUTION BOARD
MDP	MAIN DISTRIBUTION PANEL
MFR	MANUFACTURER
MLO	MAIN LUGS ONLY
(N)	NEW
NEC	NATIONAL ELECTRICAL CODE
NL	NIGHT LIGHT
NO	NUMBER
OD, O.D.	OUTSIDE DIAMETER
PB	PULL BOX
PMR	PER MFR'S RECOMMENDATIONS
POS	POINT OF SALE (CASH REGISTER)
(R)	REMOVE AND RELOCATE
RCPT	RECEPTACLE(S)
SCH	SCHEDULE
SF	SQUARE FOOT
TC	TEMPERATURE CONTROLS CONTRACTOR
TGB	TELECOMMUNICATIONS GROUND BAR
TTB	TELECOMMUNICATIONS TERMINAL BOARD
TYP	TYPICAL
UH	UNIT HEATER
UNO	UNLESS NOTED OTHERWISE
W	WALL-MOUNTED DEVICE
WG	WIRE GUARD
WP	WEATHERPROOF-IN-USE
WR	WEATHER-RESISTANT
(X)	EXISTING TO BE REMOVED

MOUNTING HEIGHTS

DESCRIPTION	HEIGHT
RECEPTACLES (WALL)	18" A.F.F. TO CENTER
RECEPTACLES (ABOVE COUNTER)	48" A.F.F. TO CENTER
RECEPTACLES (UNFINISHED AREA)	48" A.F.F. TO CENTER
SURFACE RACEWAY RECEPTACLE STRIPS	42" A.F.F. TO BOTTOM
LIGHT SWITCHES	48" A.F.F. TO CENTER
VOICE OUTLET (WALL)	54" A.F.F. TO CENTER
VOICE/DATA OUTLET	18" A.F.F. TO CENTER
CLOCK OUTLET	88" A.F.F. TO CENTER
EXIT SIGN	CENTER ON DOOR, 12" ABOVE DOOR
FIRE ALARM PULL STATION	48" A.F.F. TO CENTER
FIRE ALARM HORN/STROBE	80" A.F.F. TO BOTTOM OR 6" BELOW CEILING
CARD READERS	48" A.F.F. TO CARD SLOT
SECURITY SYSTEM CONTROLS	48" A.F.F. TO CENTER
THERMOSTATS/ HVAC CONTROLS	48" A.F.F. TO CENTER
ELECTRICAL PANELS	72" A.F.F. TO TOP
SAFETY SWITCHES/MOTOR STARTER/ VFD'S	72" A.F.F. TO TOP (EXCEPT TOP OF HANDLE SHALL NOT EXCEED 78" A.F.F.
MOTOR CONTROL PUSHBUTTONS	60" A.F.F. TO CENTER

SUBSCRIPT "AC" BESIDE RECEPTACLES DENOTES THAT RECEPTACLE IS TO BE INSTALLED WITH BOTTOM OF BOX TWO INCHES ABOVE THE COUNTERTOP OR BACKSPLASH. COORDINATE WITH THE GENERAL CONTRACTOR AND THE CASEWORK SUPPLIER.

Montana Fish, Wildlife & Parks

MONTANA FISH WILDLIFE AND PARKS
REGION 3 HQ LIGHTING UPGRADES
1400 SOUTH 19TH AVE, BOZEMAN, MT 59718

ELECTRICAL LEGEND AND SCHEDULE(S)

CDS
CONSULTING DESIGN SOLUTIONS, INC.
ENGINEERING
7540 CHURCHILL RD MANHATTAN, MT 59741
PHONE: (406) 282 7082 FAX: (406) 282-7087

Scott T. Elders No. 29029PE

PROJECT: FWP# 7099408 , CDSI # 1322
DRAWN BY: STE
APPROVED: CDS
DATE: February 12, 2014 REVISED: .
SHEET NUMBER: E2.1

COORDINATION NOTE:
IT IS ABSOLUTELY NECESSARY FOR ALL TRADES INCLUDING EQUIPMENT SUPPLIERS TO COORDINATE WITH EACH OTHER AND TO VERIFY THAT THERE ARE NO CONFLICTS IN LOCATIONS OF DUCTS, CONDUITS, SPRINKLER HEADS, SPRINKLER PIPING, DIFFUSERS, ELECTRICAL BOXES AND OTHER ITEMS THROUGHOUT THIS PROJECT BEFORE FINAL PLACEMENT OF MATERIALS.

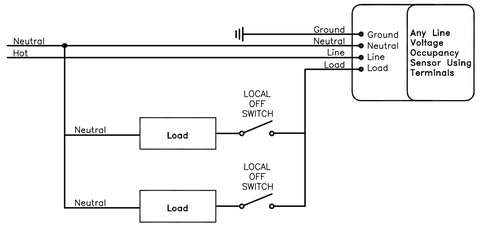

NOTE:
PROVIDE A LINE VOLTAGE OCCUPANCY SENSOR PER DRAWINGS AND SPECIFICATIONS.

1 / E2.2 BI-LEVEL LIGHTING DETAIL
NO SCALE

ID: LCP
LOCATION: ELECTRICAL ROOM 103
SUPPLY CIRCUIT: (SA-25) VOLTAGE: 120V NORMAL

RELAY	LINE FEED	ZONE	TYPE	VOLTAGE	SOURCE	DESCRIPTION
1	SA-27	1	NC	120V	NORMAL	EXTERIOR STORAGE: EXTERIOR, BUILDING MOUNTED, LIGHTS
2	SA-25	2	NC	120V	NORMAL	SHOP: EXTERIOR, BUILDING MOUNTED, LIGHTS
3	SA-4	3	NC	120V	NORMAL	SHOP: INTERIOR EAST SERVICE BAY LIGHTS
4	SA-2	4	NC	120V	NORMAL	SHOP: INTERIOR WEST SERVICE BAY(S) LIGHTS
5	SA-29	5	NC	120V	NORMAL	SHOP: INTERIOR ATTIC LIGHTS
6	SA-35	6	NC	120V	NORMAL	SHOP: INTERIOR ATTIC LIGHTS
7	–	7	NC	120V	NORMAL	SPARE
8	–	8	NC	120V	NORMAL	SPARE

WATTSTOPPER INTERIOR PART # LMCP8 WITH EIGHT (8) 20A 'HDR' SINGLE-POLE RELAY MODULES
WATTSTOPPER EXTERIOR PART # LENC8S

1. INITIAL START UP PROGRAMMING FOR LIGHTING CONTROL PANEL, LCP SHALL BE AS FOLLOWS:
   a. ALL RELAYS SHALL ACT AS INDEPENDENT GROUPS. PROGRAMING SHALL OPERATE GROUPS IN CONFIGURATION LISTED BELOW AND IN LIGHTING CONTROL PANEL SCHEDULE.
   b. ALL LOW-VOLTAGE MANUAL WALL SWITCHES SHALL BE 2-BUTTON. TOP BUTTON SHALL TURN ON AND BOTTOM BUTTON SHALL TURN OFF RESPECTIVE RELAY(S).
   c. ALL INTERIOR ZONES, 3-6 SHALL BE PROGRAMMED TO BE TURNED ON AND OFF VIA THE WALL MOUNTED SWITCHES. ALL INTERIOR ZONES SHALL BE PROGRAMMED TO AUTOMATICALLY TURN OFF AT 10:00PM EACH NIGHT AFTER A 2 MINUTE WARNING FLASH. WALL MOUNTED SWITCHES USED BETWEEN 10:00PM AND 6:00AM SHALL PROVIDE A 1 HOUR MAXIMUM OVER RIDE OF THE RESPECTIVE ZONE WITH LIGHTS IN SPACE FLASHING 2 MINUTES PRIOR TO THE TIMEOUT.
   d. EXTERIOR BUILDING MOUNTED LIGHTING SHALL BE PROGRAMMED FOR ALL ZONES ON AT SUNSET VIA ASTRONOMICAL TIME CLOCK AND OFF AT SUNRISE VIA ASTRONOMICAL TIME CLOCK. THE RESPECTIVE ZONES SHALL BE ABLE TO SHUT OFF FOR A PERIOD IN THE MIDDLE OF THE NIGHT IF THE OWNER DESIRES.
2. LCP SHALL BE PROGRAMMED TO ACCOMMODATE FOR ALL BUSINESS CLOSURE PERIODS DURING HOLIDAYS. PROGRAMING NOTED IN THIS LIST SHALL SERVE AS BASIC START UP BASE PROGRAMING FOR THE LIGHTING CONTROL PANEL. THE ELECTRICAL CONTRACTOR SHALL COORDINATE WITH THE OWNER FOR BUSINESS SCHEDULE, FINAL LIGHT CYCLE TIMES AND ANY OTHER MODIFICATIONS TO ACCOMMODATE END USER'S FUNCTION.

2 / E2.2 LCP PANEL SCHEDULE
NO SCALE

EXISTING PANEL (GENERAL ELECTRIC 'NLAB')

PANEL: (SA) CHAR: 208Y/120V 3PH 4W MAINS: 100A MLO MOUNTING: SURFACE
PANEL FEED: EXISTING FEEDERS: EXISTING
MISC:

CKT	FRAME	WIRE	LOAD DESCRIPTION	CKT	FRAME	WIRE	LOAD DESCRIPTION
1	20A/1P	(E)	(E) RCPT: STORAGE/PREP/EF-1/EXT.	2	20A/1P	(E)	(E) LTS: SERVICE BAYS (WEST)
3	20A/1P	(E)	(E) RCPT: SHOP OFFICE/HALL	4	20A/1P	(E)	(E) LTS: DOUBLE SERVICE BAY (EAST)
5	20A/1P	(E)	(E) RCPT: SHOP OFFICE	6	20A/1P	(E)	(E) LTS: ELEC/STOR/HALL/SHOP OFFICE
7	20A/1P	(E)	(E) RCPT: REFRIG/EWC-2	8	20A/1P	(E)	(E) RCPT: WORK AREA (FLOOR)
9	20A/1P	(E)	(E) RCPT: WORK AREA COUNTER	10	20A/1P	(E)	(E) RCPT: WORK AREA
11	20A/1P	(E)	(E) RCPT: WORK AREA	12	20A/1P	(E)	(E) RCPT: WORK AREA/EXTERIOR
13	20A/1P	(E)	(E) RCPT: NECROP/HIDE/CLR,FRZ/EXT	14	20A/1P	(E)	(E) RCPT: LAB OFFICE
15	20A/1P	(E)	(E) RCPT: NECROPSY	16	20A/1P	(E)	(E) RCPT: LAB OFFICE
17	20A/1P	(E)	(E) RCPT: NECROPSY	18	20A/1P	(E)	(E) RCPT: LAB OFFICE
19	20A/1P	(E)	(E) RCPT: HEADBOLT HEATERS	20	20A/1P	(E)	(E) RCPT: HEADBOLT HEATERS
21	20A/1P	(E)	(E) RCPT: HEADBOLT HEATERS	22	20A/1P	(E)	(E) RCPT: HEADBOLT HEATERS
23	20A/1P	(E)	(E) RCPT: HEADBOLT HEATERS	24	20A/1P	(E)	(E) RCPT: HEADBOLT HEATERS
25	20A/1P	(E)	(E) LTS: EXTERIOR SHOP/LAB	26	20A/1P	(E)	(E) RCPT: IRRIGATION CONTROLLER
27	20A/1P	(E)	(E) LTS: EXTERIOR EXTERNAL STORAGE	28	20A/1P	(E)	(E) LTS: BATHROOMS/NECROP/HIDE/COOLER/FREEZER
29	20A/1P	(E)	(E) LTS: ATTIC	30	20A/1P	(E)	(E) LTS: LAB OFFICE/ WORK AREA
31	20A/1P	(E)	(E) RCPT: ATTIC	32	20A/1P	(E)	(E) RCPT: COUNTER
33	20A/1P	(E)	(E) MECH ROOM EXHAUST FAN	34	20A/1P	(E)	(E) FREEZER
35	20A/1P	(E)	(E) LTS: ATTIC	36	20A/1P	(E)	(E) RCPT: TELEPHONE & BB BACKBOARD
37	20A/1P	(E)	(E) CHILLER CONTROL CIRCUIT	38	20A/2P	(E)	(E) LAB ULTRA LOW FREEZER
39	20A/2P	(E)	(E) DEEP FREEZER	40	----	(E)	----
41	----	(E)	----	42	------	(N/A)	SPACE

EXISTING PANEL (GENERAL ELECTRIC 'NLAB')

PANEL: (SB) CHAR: 208Y/120V 3PH 4W MAINS: 225A MLO MOUNTING: SURFACE
PANEL FEED: EXISTING FEEDERS: EXISTING
MISC:

CKT	FRAME	WIRE	LOAD DESCRIPTION	CKT	FRAME	WIRE	LOAD DESCRIPTION
1	20A/1P	(E)	(E) RCPT&LTS: HIDES/GAME NET/STORAGE	2	20A/1P	(E)	(E) RCPT: SOUTH SERVICE BAY
3	20A/1P	(E)	(E) RCPT&LTS: ENDANGERED SPECIES/HQ STORAGE	4	20A/1P	(E)	(E) RCPT: SOUTH SERVICE BAY
5	20A/1P	(E)	(E) RCPT&LTS: HQ STORAGE	6	20A/1P	(E)	(E) RCPT: SOUTH SERVICE BAY
7	20A/1P	(E)	(E) RCPT: NORTH SERVICE BAY	8	20A/1P	(E)	(E) RCPT: SOUTH SERVICE BAY
9	20A/1P	(E)	(E) RCPT: NORTH SERVICE BAY	10	20A/1P	(E)	(E) RCPT: SOUTH SERVICE BAY
11	20A/1P	(E)	(E) RCPT: SOUTH SERVICE BAY	12	20A/1P	(E)	(E) RCPT: SOUTH SERVICE BAY
13	20A/1P	(E)	(E) EXHAUST FANS 3 & 4	14	20A/1P	(E)	(E) RCPT: DOUBLE SERVICE BAY/EXTERIOR
15	20A/1P	(E)	(E) RCPT: MECH RM./ TEMP CONTROL PANEL	16	20A/1P	(E)	(E) RCPT: DOUBLE SERVICE BAY/EXTERIOR
17	20A/1P	(E)	(E) EXHAUST FAN 2	18	20A/1P	(E)	(E) RCPT: DOUBLE SERVICE BAY
19	20A/1P	(E)	(E) OVERHEAD DOORS: WEST BAY (DOORS 16 & 17)	20	20A/1P	(E)	(E) RCPT&LTS: FISHERIES
21	20A/1P	(E)	(E) UNIT HEATERS 3 & 4 (EAST BAY)	22	20A/1P	(E)	(E) RCPT&LTS: ENFORCEMENT, I&E
23	20A/1P	(E)	(E) HOIST: DOUBLE SERVICE BAY	24	30A/3P	(E)	(E) HOIST: NECROPSY
25	20A/1P	(E)	(E) OVERHEAD DOORS: EAST BAY	26	----	(E)	----
27	20A/1P	(E)	(E) UNIT HEATERS (WEST BAY)	28	----	(E)	----
29	20A/2P	(E)	(E) FREEZER	30	40A/2P	(E)	(E) WELDER
31	----	(E)	----	32	----	(E)	----
33	15A/2P	(E)	(E) COOLER	34	20A/1P	(E)	(E) RCPT&LTS: PARKS/GAME
35	----	(E)	----	36	20A/1P	(E)	(E) OVERHEAD DOOR: NECROPSY
37	60A/3P	(E)	(E) CONDENSOR UNIT	38	30A/3P	(E)	(E) WELDER
39	----	(E)	----	40	----	(E)	----
41	----	(E)	----	42	----	(E)	----

EXISTING PANEL (SQUARE-D LOADCENTER)

PANEL: (SC) CHAR: 208/120V 1PH 3W MAINS: 100A M.B. MOUNTING: SURFACE
PANEL FEED: EXISTING FEEDERS: EXISTING
MISC:

CKT	FRAME	WIRE	LOAD DESCRIPTION	CKT	FRAME	WIRE	LOAD DESCRIPTION
1	20A/2P	(E)	(E) AIR COMPRESSOR	2	100A/2P	(E)	(E) RCPT: SOUTH SERVICE BAY
3	----	(E)	----	4	----	(E)	----
5	20A/2P	(E)	(E) TABLE SAW	6	20A/1P	(E)	(E) RCPT: SOUTH SERVICE BAY
7	----	(E)	----	8	20A/2P	(E)	(E) RCPT: WELDER
9	50A/2P	(E)	(E) 50A RCPT: EAST SIDE OF BUILDING	10	----	(E)	----
11	----	(E)	----	12	20A/1P	(E)	(E) LTS: HOOD
13	20A/1P	(E)	(E) RCPT: EAST SIDE OF BUILDING	14	20A/1P	(E)	(E) LTS: HOOD
15	20A/1P	(E)	(E) EXHAUST FAN 5	16	20A/2P	(E)	(E) NEW TABLE SAW
17	20A/2P	(E)	(E) MAU-2	18	----	(E)	----
19	----	(E)	----	20	------	(N/A)	SPACE
21	------	(N/A)	SPACE	22	------	(N/A)	SPACE
23	------	(N/A)	SPACE	24	------	(N/A)	SPACE

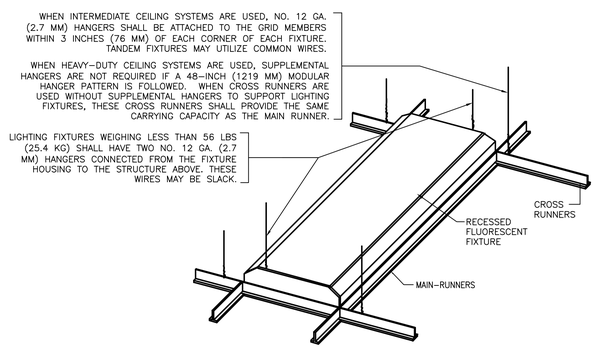

3 / E2.2 LAY-IN SEISMIC FIXTURE BRACING DETAIL
NO SCALE

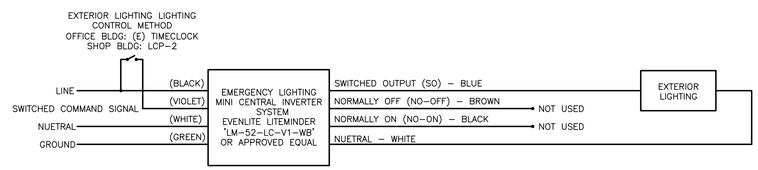

4 / E2.2 EMERGENCY LIGHTING INVERTER WIRING DIAGRAM
NO SCALE

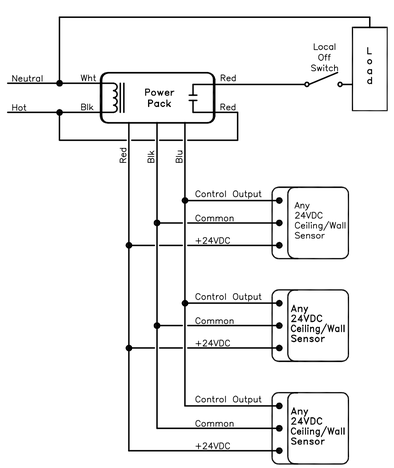

NOTE:
MAXIMUM NUMBER OF SENSORS PER POWER PACK DEPENDS ON THE MANUFACTURER AND MODEL OF THE SENSOR. PROVIDE THE CORRECT NUMBER OF POWER PACKS PER THE NUMBER OF SENSORS REQUIRED BY THE DRAWINGS.

5 / E2.2 MULTIPLE 24VDC OCCUPANCY SENSORS UTILIZING ONE POWER PACK DETAIL
NO SCALE

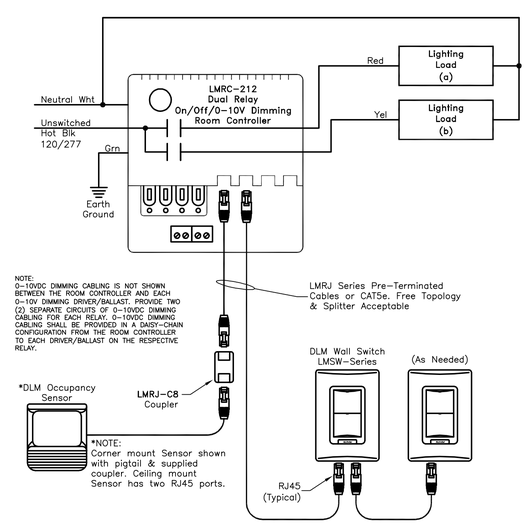

6 / E2.2 WATTSTOPPER 'LMRC-212' 0-10V DIMMING/ TWO RELAY/ ROOM CONTROLLER DETAIL
NO SCALE

Montana Fish, Wildlife & Parks

MONTANA FISH WILDLIFE AND PARKS
REGION 3 HQ LIGHTING UPGRADES
1400 SOUTH 19TH AVE, BOZEMAN, MT 59718

ELECTRICAL SCHEDULE(S) AND DETAILS

CDS
CONSULTING DESIGN SOLUTIONS, INC.
ENGINEERING
7540 CHURCHILL RD MANHATTAN, MT 59741
PHONE: (406) 282 7082 FAX: (406) 282-7087

Scott T. Elders No. 29029PE

PROJECT: FWP# 7099408 , CDSI # 1322
DRAWN BY: STE
APPROVED: CDS
DATE: February 12, 2014 REVISED: .
SHEET NUMBER: E2.2