PLANS FOR CONSTRUCTION OF:

BLUEWATER SPRINGS FISH HATCHERY
TILLET SPRING CAP PROJECT

NEAR BRIDGER, MONTANA
FWP #7113109

SHEET INDEX

TITLE SHEET ____ T1
OVERALL SITE PLAN ____ C1
HYDRAULIC PROFILE ____ C2
TILLET SPRING PIPING PROFILE (1) ____ C3
TILLET SPRING PIPING PROFILE (2) ____ C4
HATCHERY BUILDING PIPING PROFILES ____ C5
DRAIN LINE PIPING PROFILES ____ C6
HATCHERY BUILDING PIPING DETAILS ____ C7
HATCHERY BUILDING AERATION STRUCTURE DETAILS ____ C8
FIRST PASS AERATION STRUCTURE DETAILS ____ C9
DIVERSION STRUCTURE DETAILS ____ C10
GRATING AND FRP SUPPORTS ____ C11
TILLET SPRING COVER STRUCTURE PLAN ____ C12
TILLET SPRING DETAILS ____ C13
TILLET SPRING HATCH DETAILS ____ C14
TILLET SPRING SITE IMPROVEMENTS ____ C15
STRUCTURAL DETAILS ____ S1

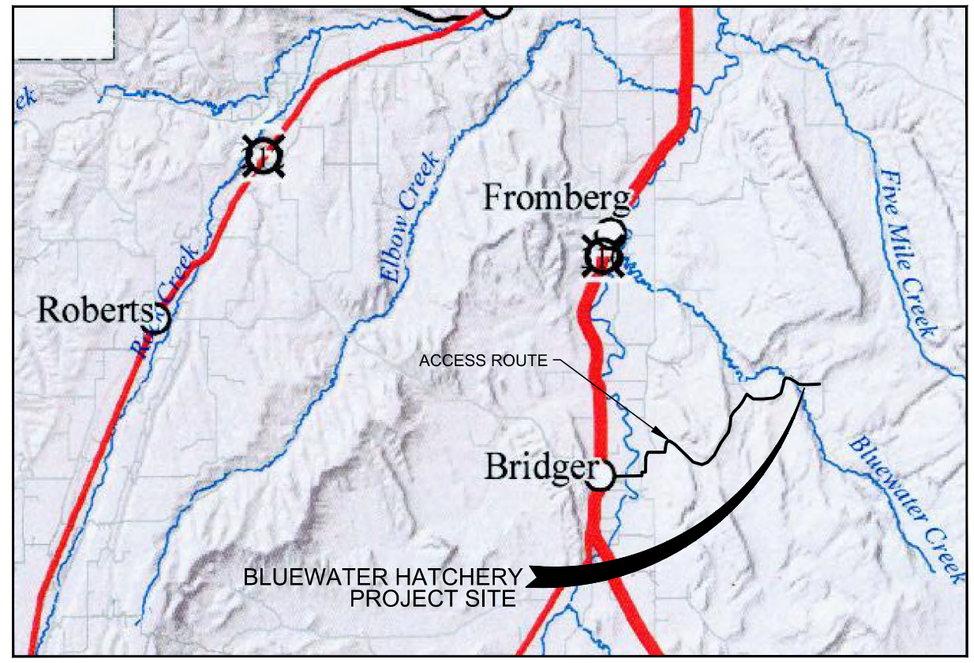

PROJECT LOCATION MAP

CIVIL DESIGN BY:
JEFFREY L. LARSON, PE

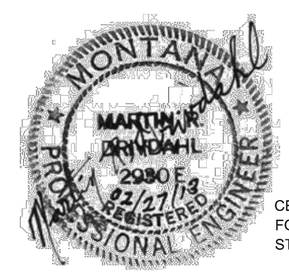

CERTIFIED FOR
FOR CONCRETE
STRUCTURES ONLY

STRUCTURAL DESIGN BY:
MARTIN DRIVDAHL, PE

0 1"
VERIFY SCALE
THIS LINE IS ONE INCH LONG IN THE ORIGINAL DRAWING

LARSON CIVIL ENGINEERING, LLC
28 ANTLER AVENUE
CLANCY, MT 59634
406-443-6111
jeff@larsonce.com

REVISIONS:

NO.:	DATE	SYMBOL	DESCRIPTION

SHEET TITLE: TITLE SHEET

PROJECT: BLUEWATER FISH HATCHERY
TILLET SPRING CAP PROJECT
NEAR BRIDGER, MONTANA

DATE: Feb. 27, 2013

DWG NAME: 33BluewtrBase.dwg

SHEET #: T1

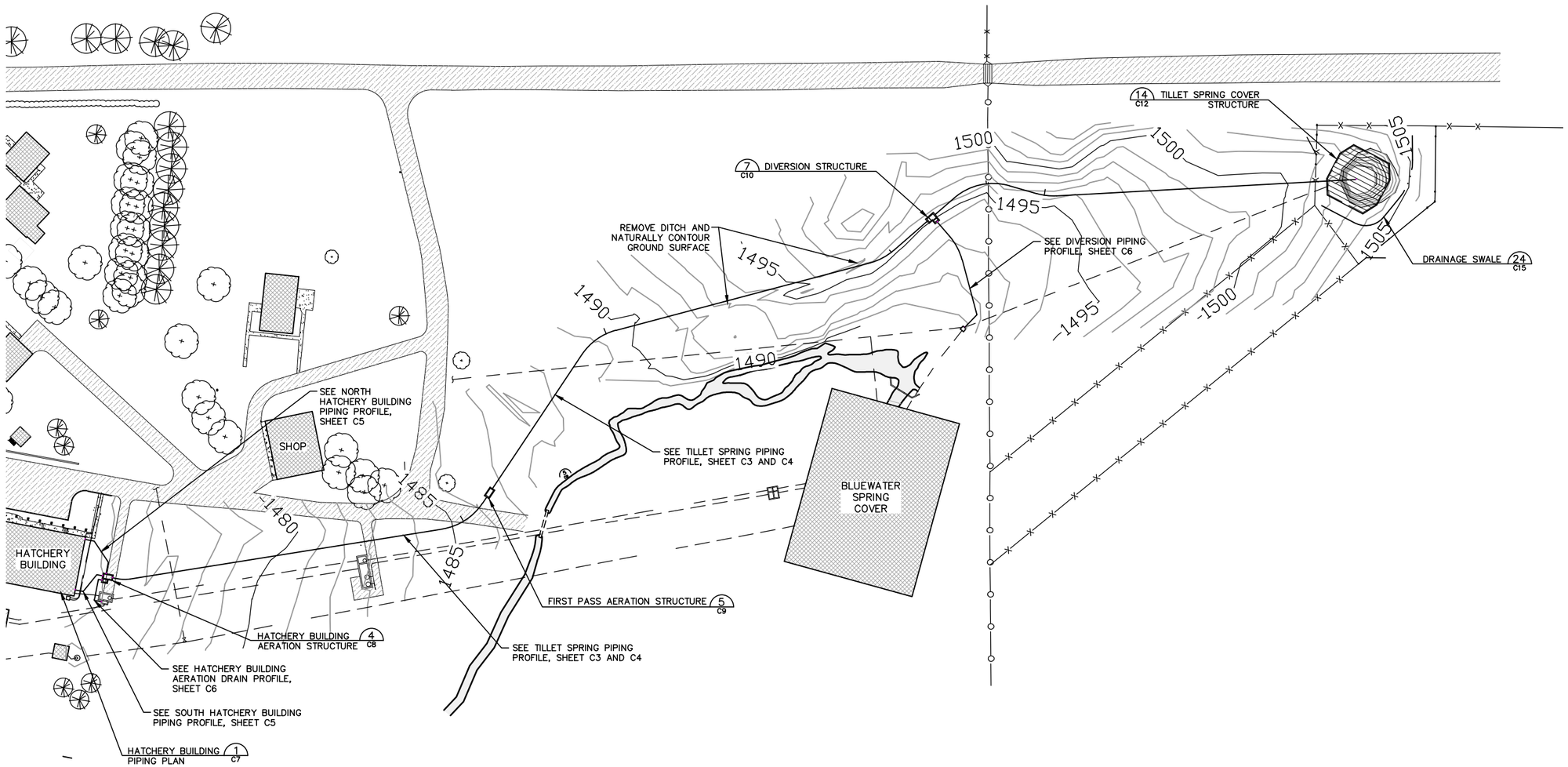

0 1"
VERIFY SCALE
THIS LINE IS ONE INCH LONG IN THE ORIGINAL DRAWING

LEGEND

EXISTING FEATURES

- BUILDINGS
- GRAVEL SURFACING
- CONCRETE
- WATER CHANNEL
- 10" PVC — WATER PIPE
- DW — DOMESTIC WATER LINE
- HW — HATCHERY WATER LINE
- IRR — IRRIGATION WATER LINE
- CONIFER TREE
- DECIDUOUS TREE
- JACK LEG FENCE
- BARBED WIRE FENCE
- UG — UNDERGROUND POWER
- T — UNDERGOUND COMMUNICATIONS
- PEIZOMETER

CONTROL POINT TABLE

POINT	NORTHING	EASTING	ELEVATION	DESCRIPTION
CP1	10,000.00	10,000.00	1,498.77	3/8" IRON PIN
CP2	9,937.00	9,804.73	1490.95	RED PLASTIC CAP "RPA CONTROL"
CP3	9,692.92	9,482.32	1,479.77	1/2" IRON PIN
CP4	9,956.99	9,367.57	1,475.28	3/8" IRON PIN

* ELEVATION DATUM AND COORDINATE SYSTEM ARE ASSUMED

0 25 50 100
SCALE IN FEET

LARSON CIVIL ENGINEERING, LLC
28 ANTLER AVENUE
CLANCY, MT 59634
406-443-6111
jeff@larsonce.com

REVISIONS:

NO.:	DATE	SYMBOL	DESCRIPTION

SHEET TITLE: OVERALL SITE PLAN

PROJECT: BLUEWATER FISH HATCHERY TILLET SPRING CAP PROJECT NEAR BRIDGER, MONTANA

DATE: Feb. 27, 2013

DWG NAME: 33BluewtrBase.dwg

SHEET C1

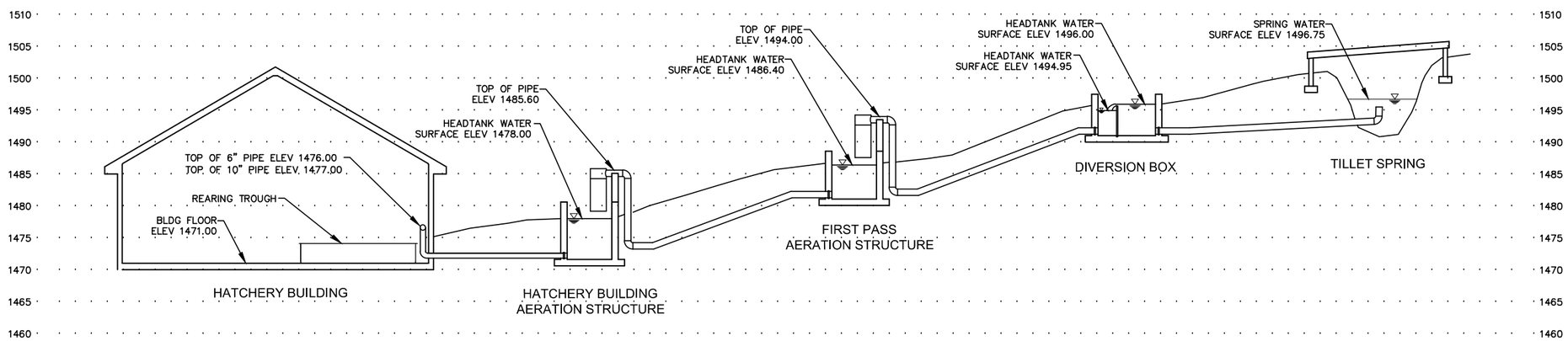

NOTE: HYDRAULIC PROFILE BASED ON A FLOWRATE OF 700 GPM

TILLET SPRING HYDRUALIC PROFILE

0 1"
VERIFY SCALE
THIS LINE IS ONE INCH LONG IN THE ORIGINAL DRAWING

LARSON CIVIL ENGINEERING, LLC
28 ANTLER AVENUE
CLANCY, MT 59634
406-443-6111
jeff@larsonce.com

REVISIONS:

NO.:	DATE	SYMBOL	DESCRIPTION

SHEET TITLE: HYDRAULIC PROFILE

PROJECT: BLUEWATER FISH HATCHERY
TILLET SPRING CAP PROJECT
NEAR BRIDGER, MONTANA

DATE: Feb. 27, 2013

DWG NAME: 33BluewtrBase.dwg

SHEET C2

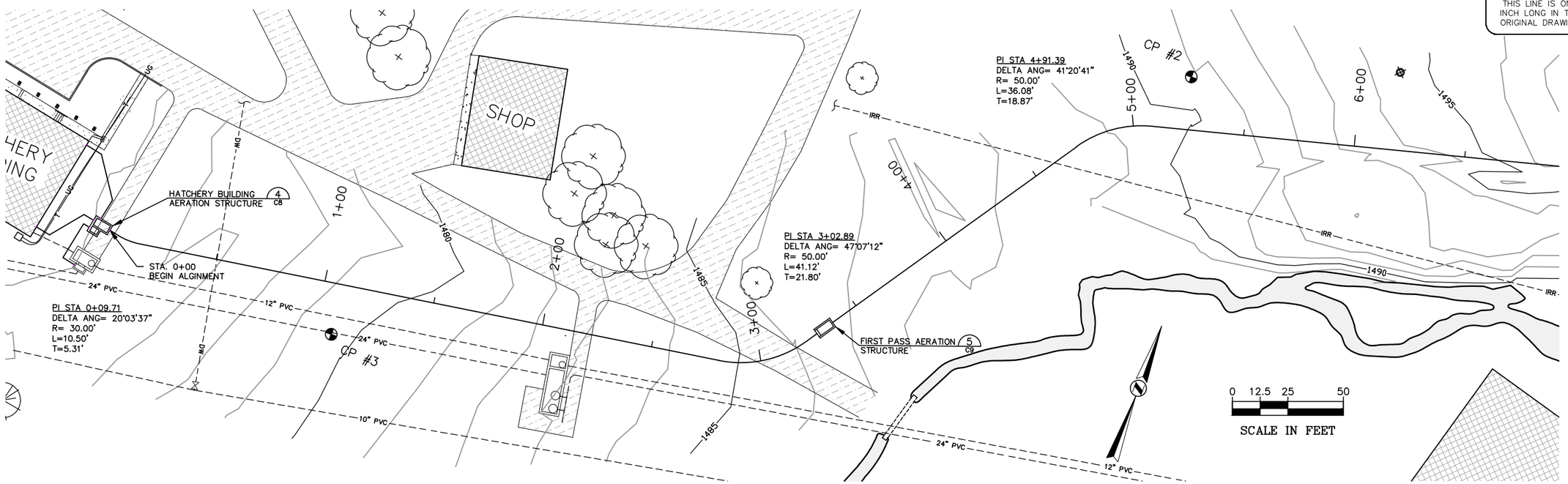

TILLET SPRING PIPING PROFILE (1)

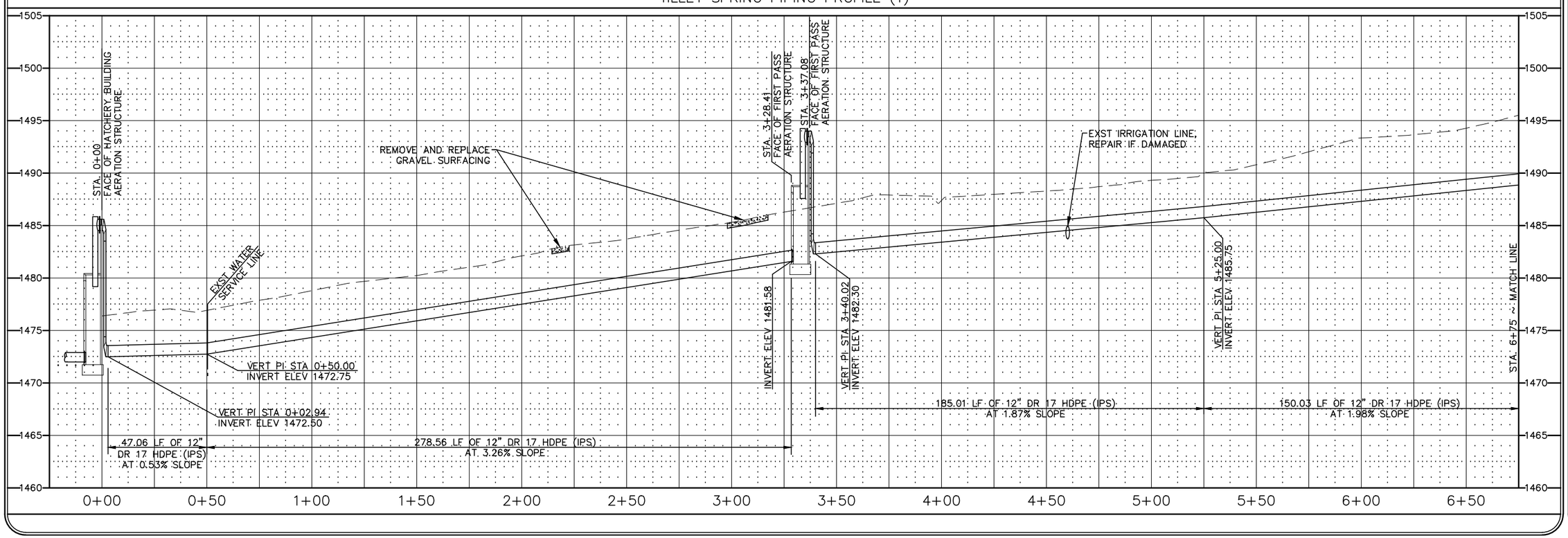

LARSON CIVIL ENGINEERING, LLC
28 ANTLER AVENUE
CLANCY, MT 59634
406-443-6111
jeff@larsonce.com

REVISIONS:

NO.:	DATE	SYMBOL	DESCRIPTION

SHEET TITLE:
TILLET SPRING
PIPING PROFILE (1)

PROJECT:
BLUEWATER FISH HATCHERY
TILLET SPRING CAP PROJECT
NEAR BRIDGER, MONTANA

DATE:
Feb. 27, 2013

DWG NAME:
33BluewtrBase.dwg

SHEET
C3

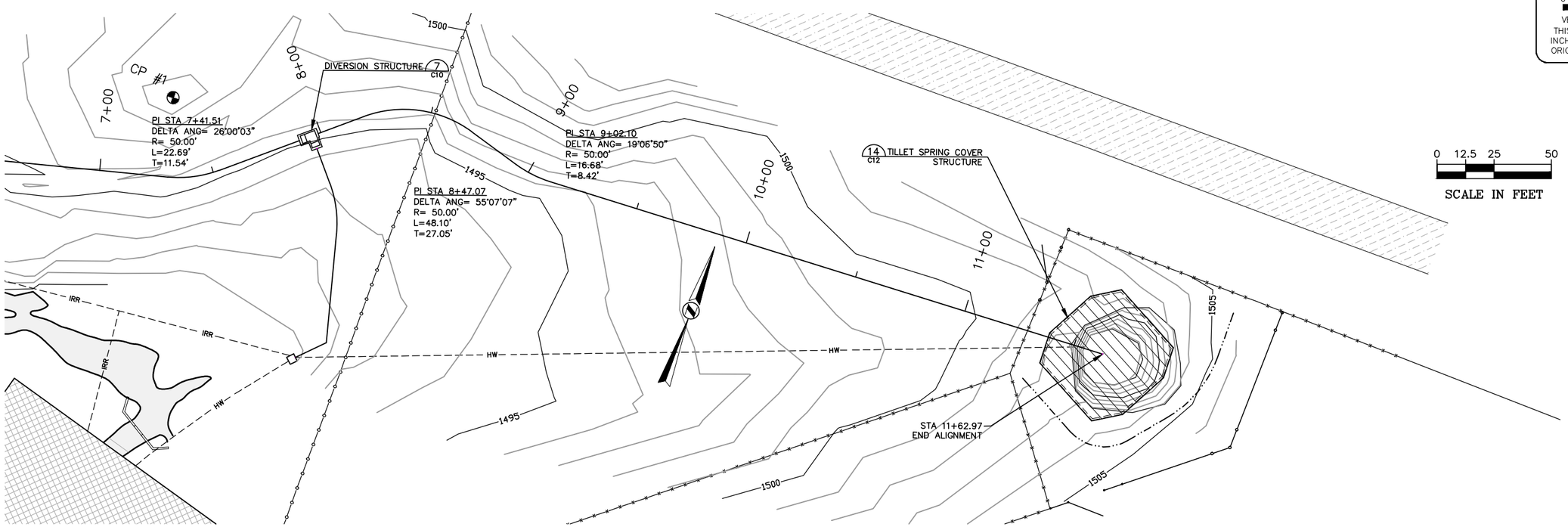

TILLET SPRING PIPING PROFILE (2)

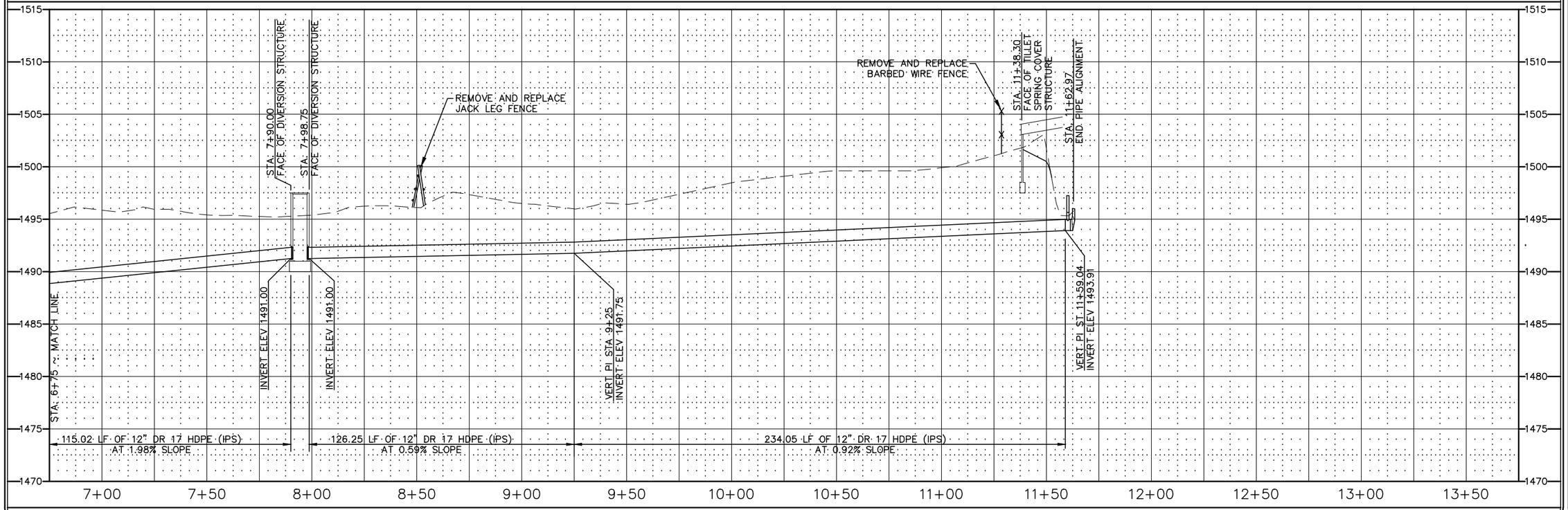

LARSON CIVIL ENGINEERING, LLC
28 ANTLER AVENUE
CLANCY, MT 59634
406-443-6111
jeff@larsonce.com

REVISIONS:

NO.:	DATE	SYMBOL	DESCRIPTION

SHEET TITLE:
TILLET SPRING
PIPING PROFILE (2)

PROJECT:
BLUEWATER FISH HATCHERY
TILLET SPRING CAP PROJECT
NEAR BRIDGER, MONTANA

DATE:
Feb. 27, 2013

DWG NAME:
33BluewtrBase.dwg

SHEET
C4

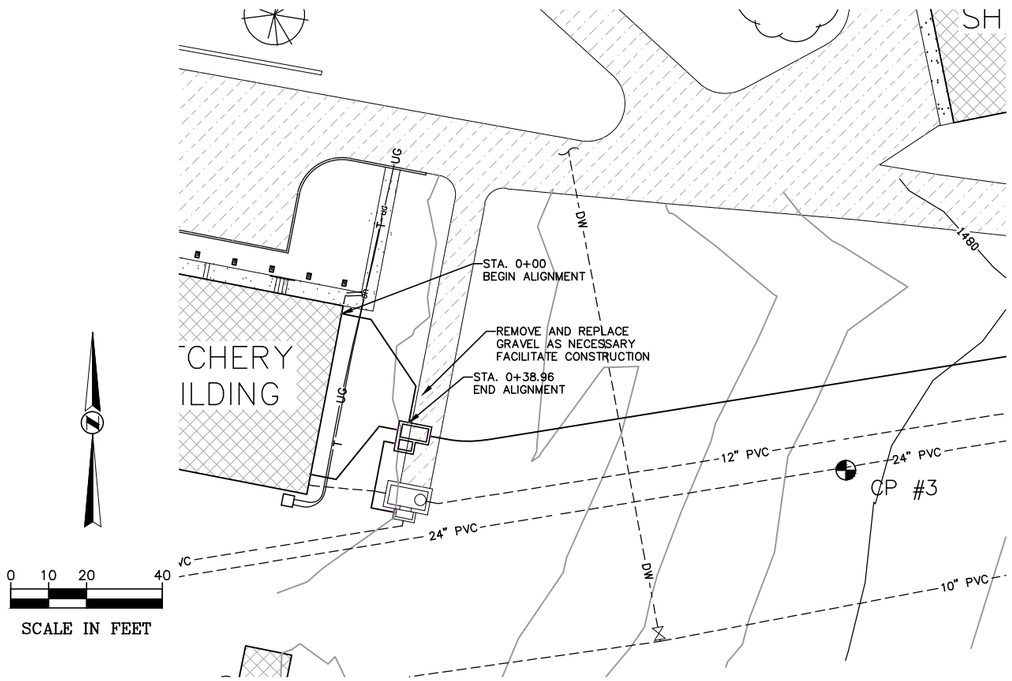

NORTH HATCHERY BUILDING PIPING PROFILE

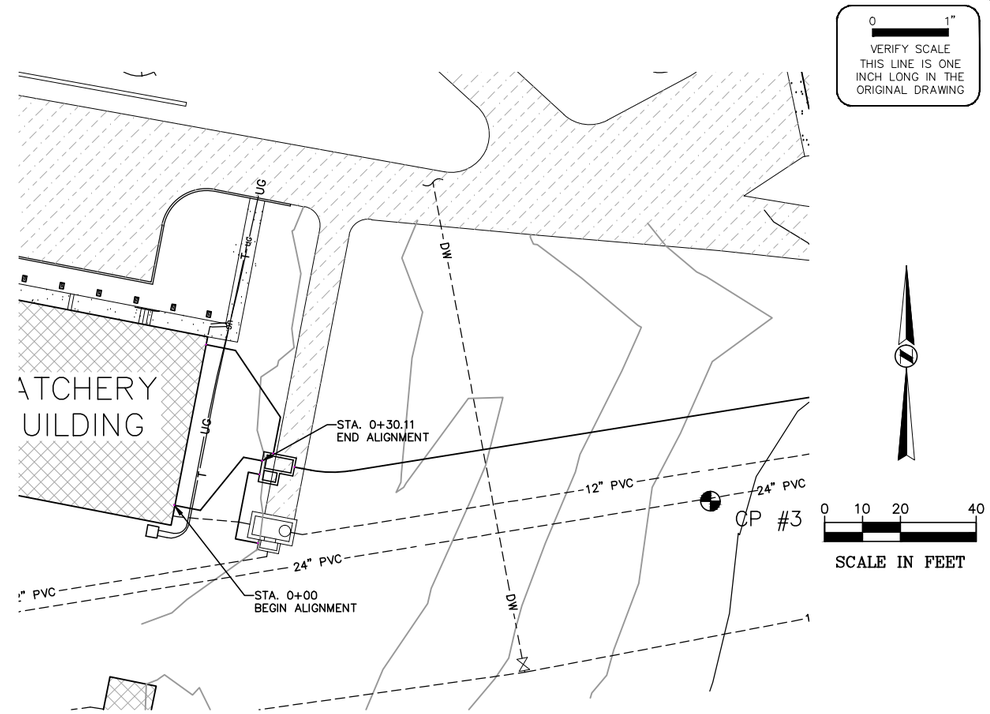

SOUTH HATCHERY BUILDING PIPING PROFILE

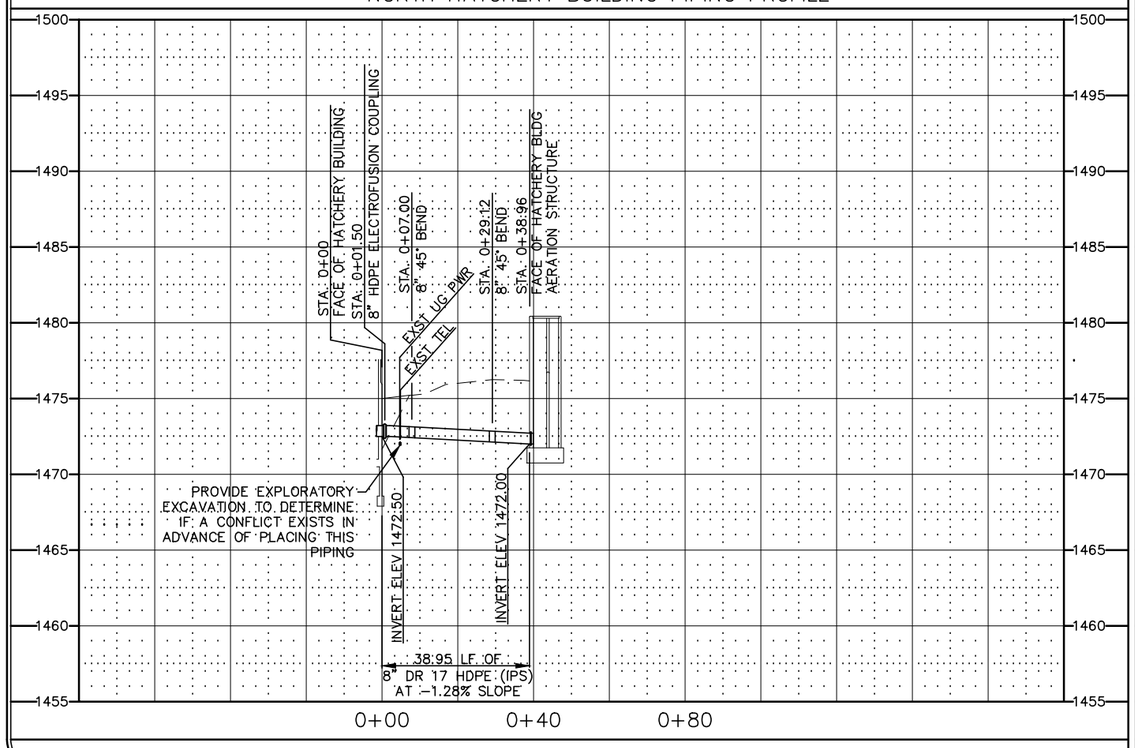

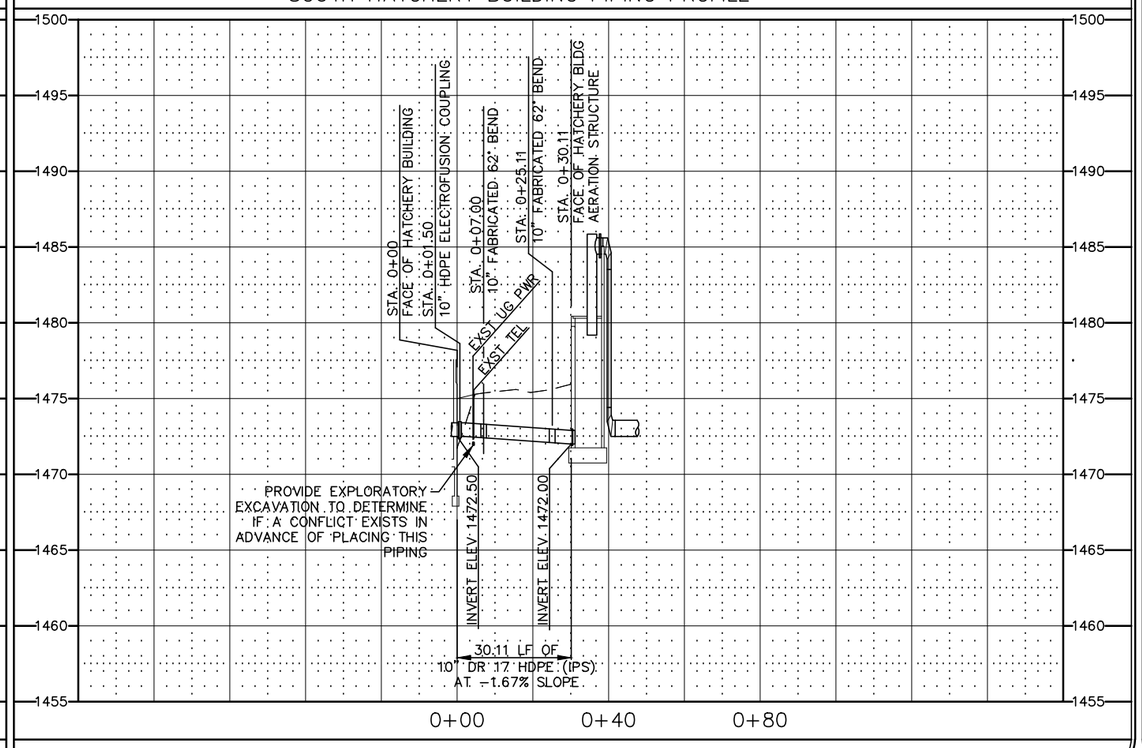

LARSON CIVIL ENGINEERING, LLC
28 ANTLER AVENUE
CLANCY, MT 59634
406-443-6111
jeff@larsonce.com

REVISIONS:

NO.:	DATE	SYMBOL	DESCRIPTION

SHEET TITLE: HATCHERY BUILDING PIPING PROFILES

PROJECT: BLUEWATER FISH HATCHERY
TILLET SPRING CAP PROJECT
NEAR BRIDGER, MONTANA

DATE: Feb. 27, 2013

DWG NAME: 33BluewtrBase.dwg

SHEET C5

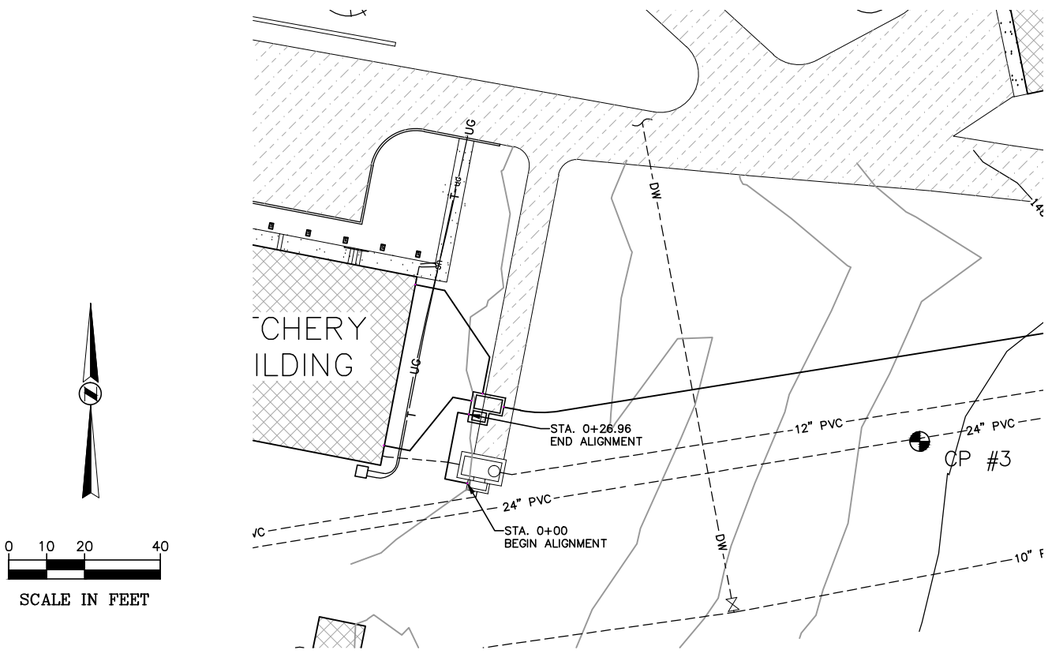

HATCHERY BUILDING AERATION DRAIN PIPING PROFILE

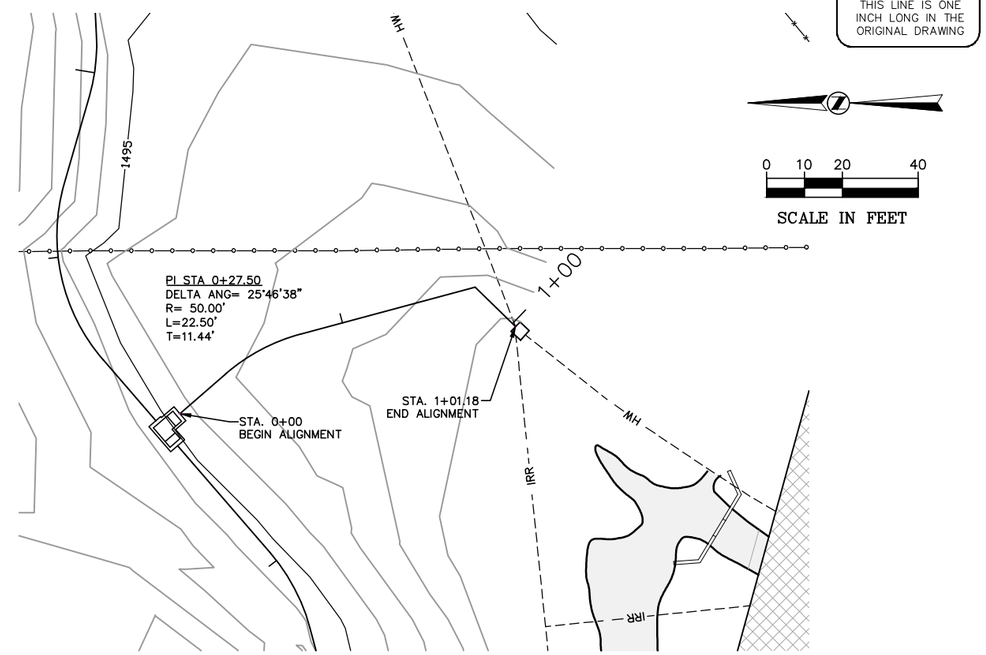

DIVERSION PIPING PROFILE

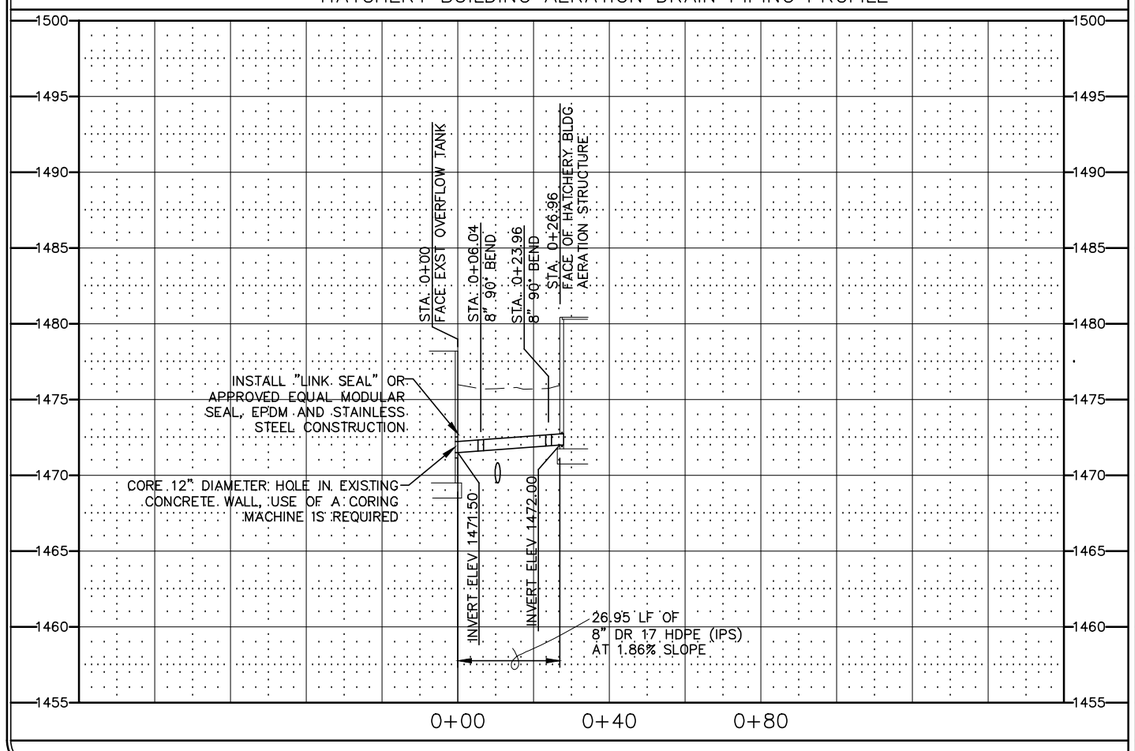

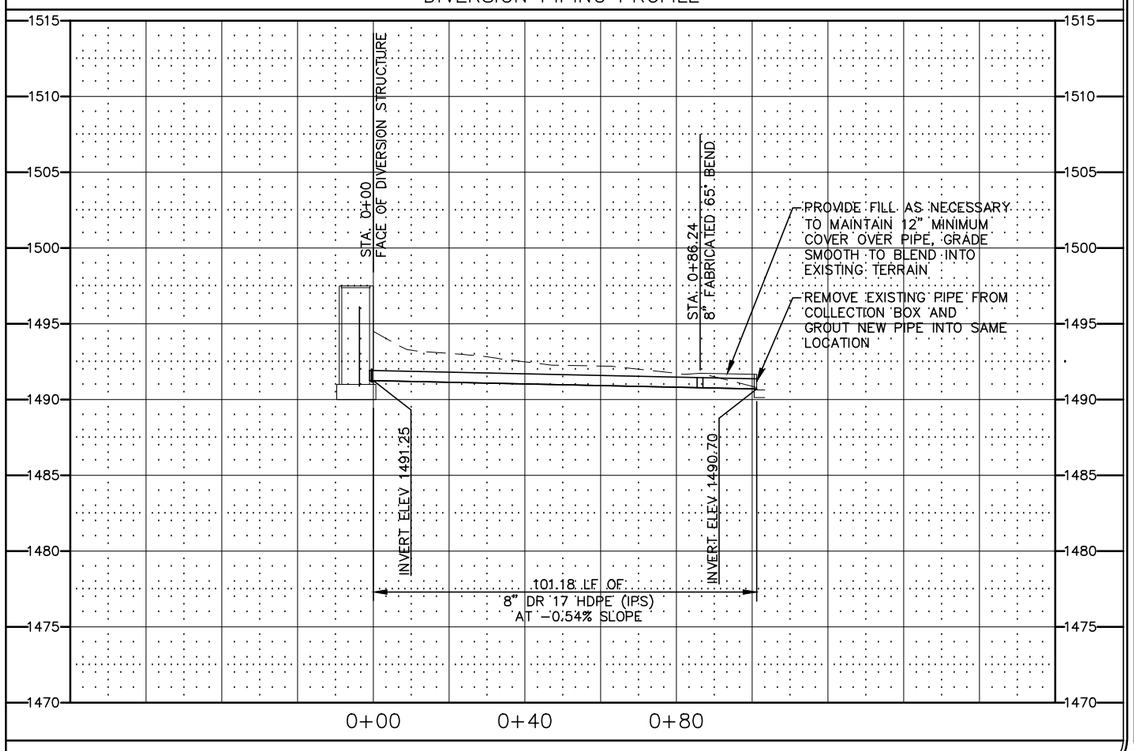

LARSON CIVIL ENGINEERING, LLC
28 ANTLER AVENUE
CLANCY, MT 59634
406-443-6111
jeff@larsonce.com

REVISIONS:

NO.:	DATE	SYMBOL	DESCRIPTION

SHEET TITLE: DRAIN AND DIVERSION PIPING PROFILES

PROJECT: BLUEWATER FISH HATCHERY
TILLET SPRING CAP PROJECT
NEAR BRIDGER, MONTANA

DATE: Feb. 27, 2013

DWG NAME: 33BluewtrBase.dwg

SHEET C6

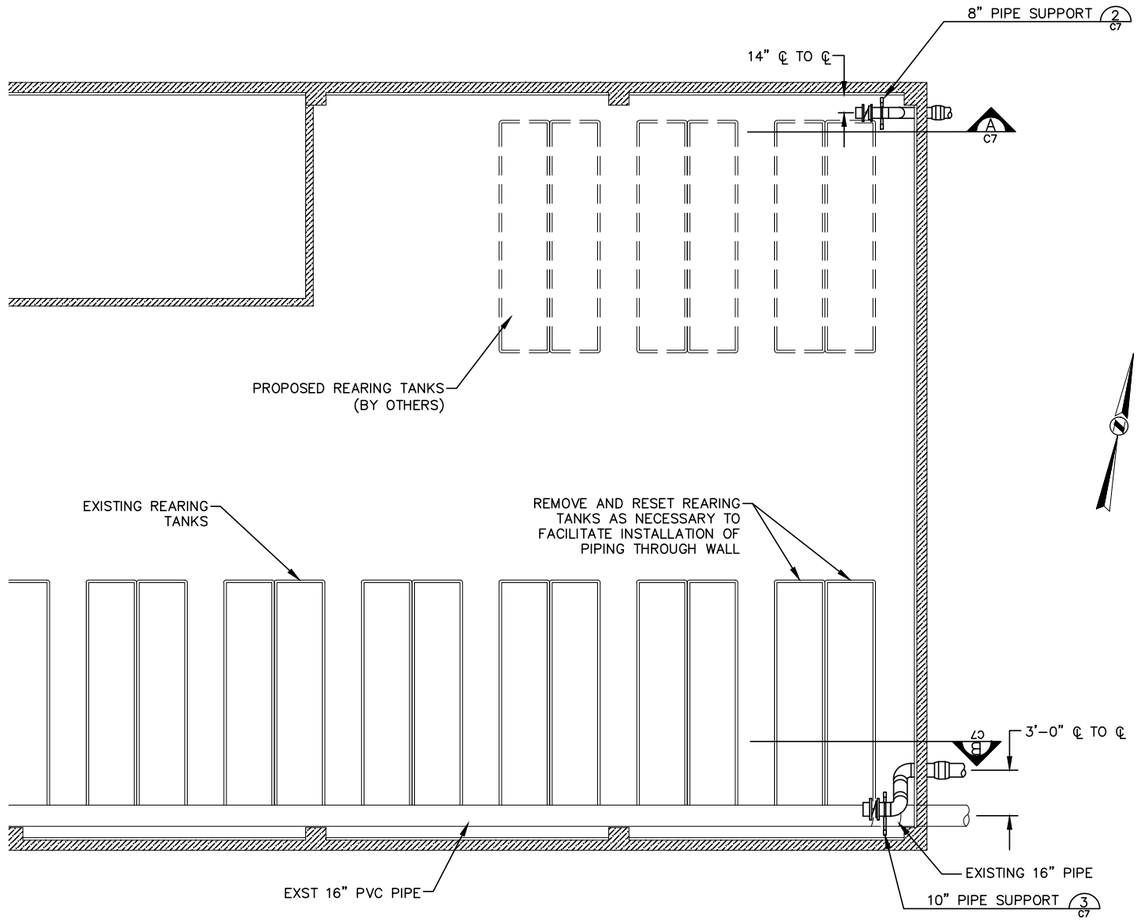

HATCHERY BUILDING PIPING PLAN 1 C1
SCALE 1"= 5'-0"

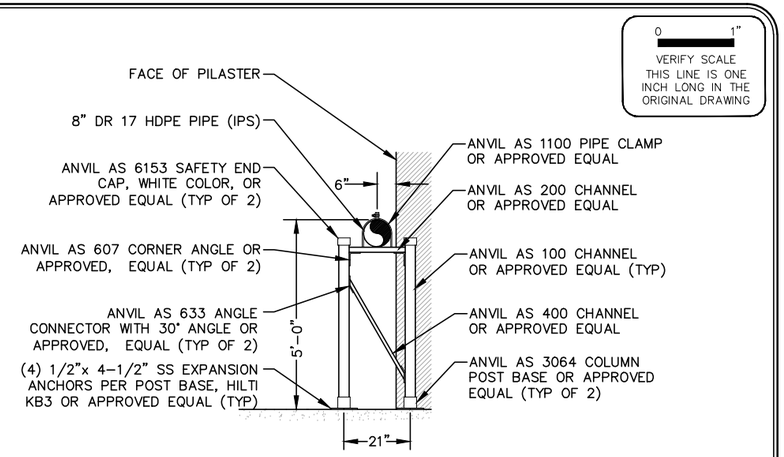

8" PIPE SUPPORT 2 C7
SCALE 1/2"= 1'-0"

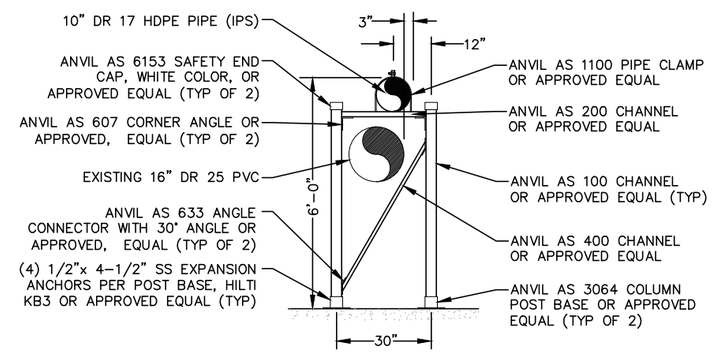

10" PIPE SUPPORT 3 C7
SCALE 1/2"= 1'-0"

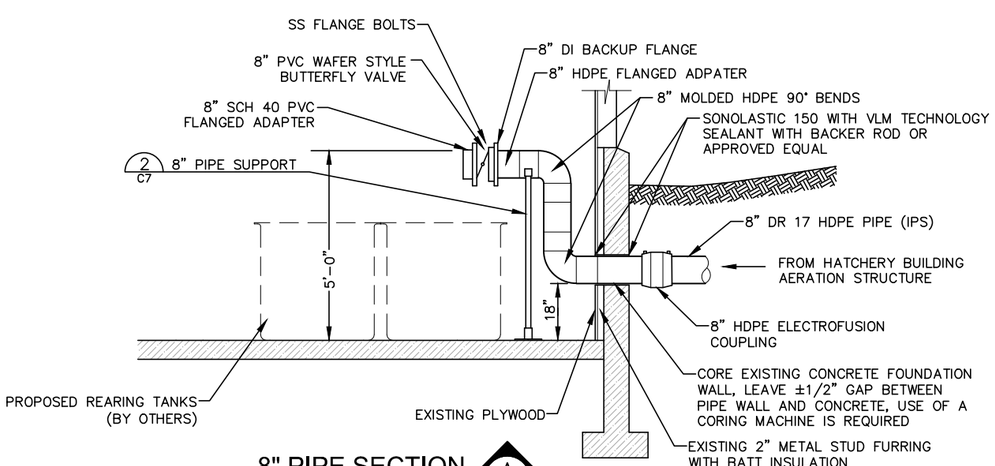

8" PIPE SECTION A C7
SCALE 1/2"= 1'-0"

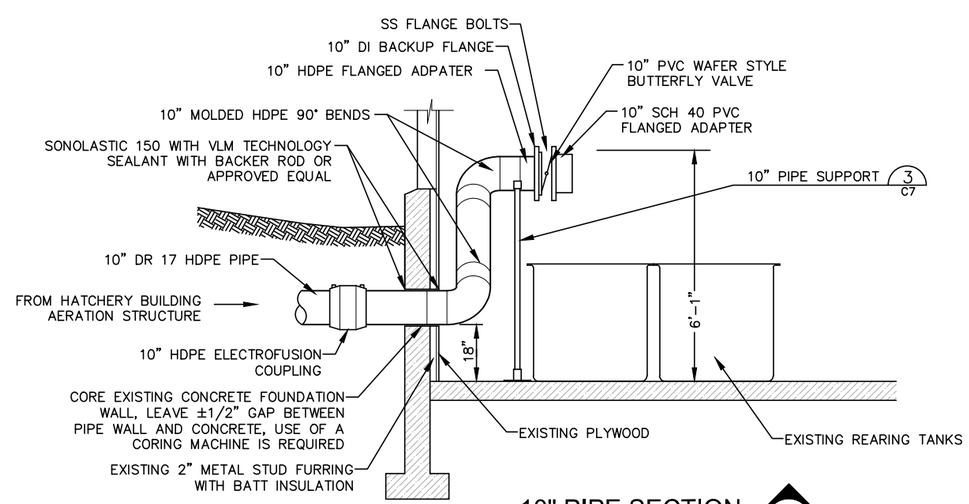

10" PIPE SECTION B C7
SCALE 1/2"= 1'-0"

LARSON CIVIL ENGINEERING, LLC
28 ANTLER AVENUE
CLANCY, MT 59634
406-443-6111
jeff@larsonce.com

REVISIONS:

NO.:	DATE	SYMBOL	DESCRIPTION

SHEET TITLE: HATCHERY BUILDING PIPING DETAILS

PROJECT: BLUEWATER FISH HATCHERY TILLET SPRING CAP PROJECT NEAR BRIDGER, MONTANA

DATE: Feb. 27, 2013

DWG NAME: 33BluewtrBase.dwg

SHEET C7

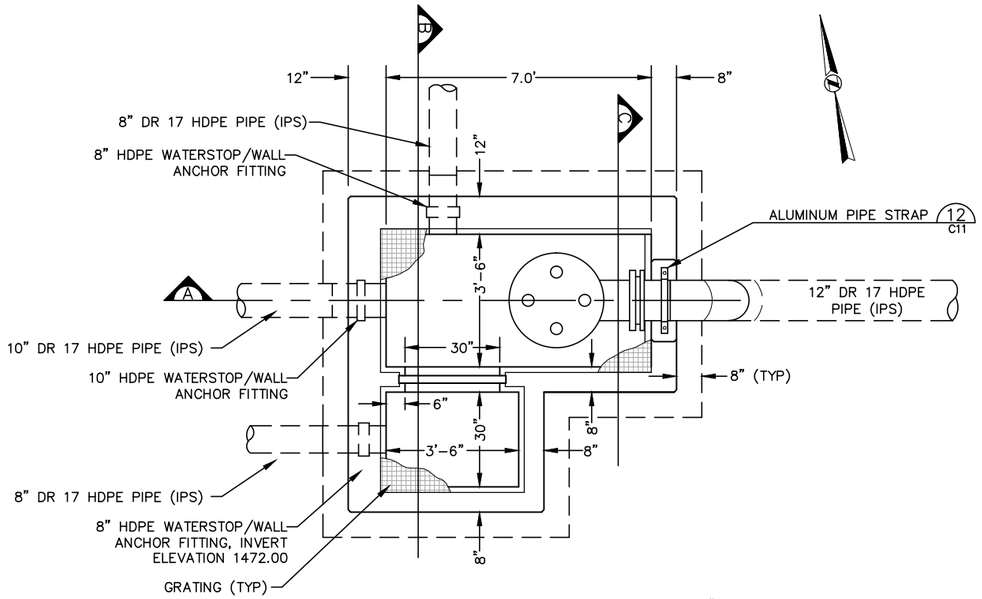

PLAN

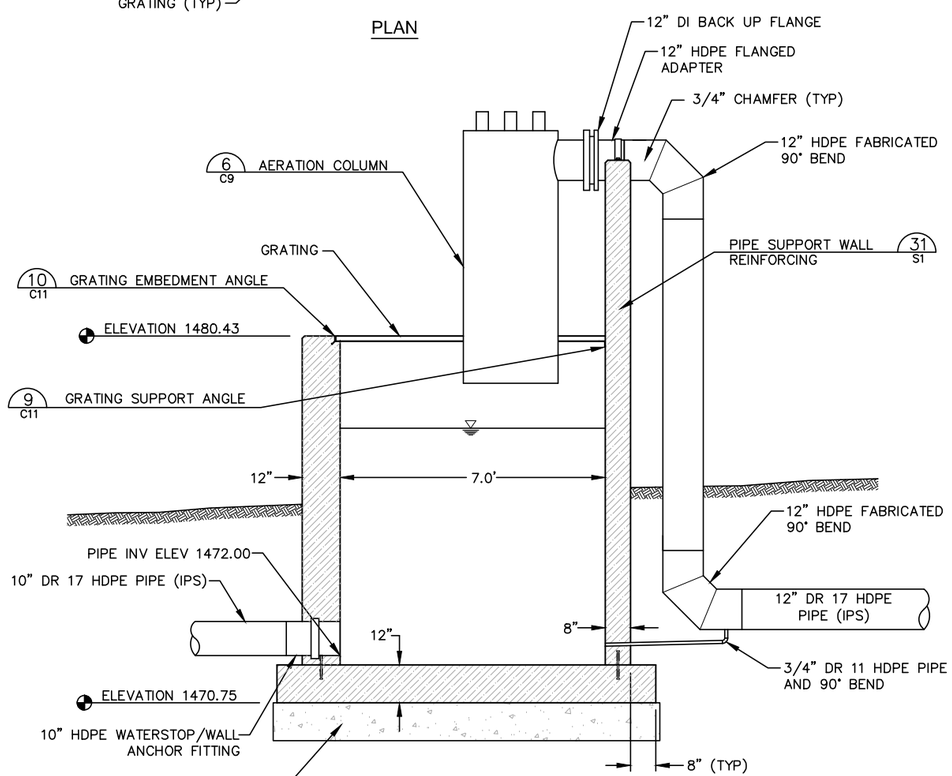

SECTION A

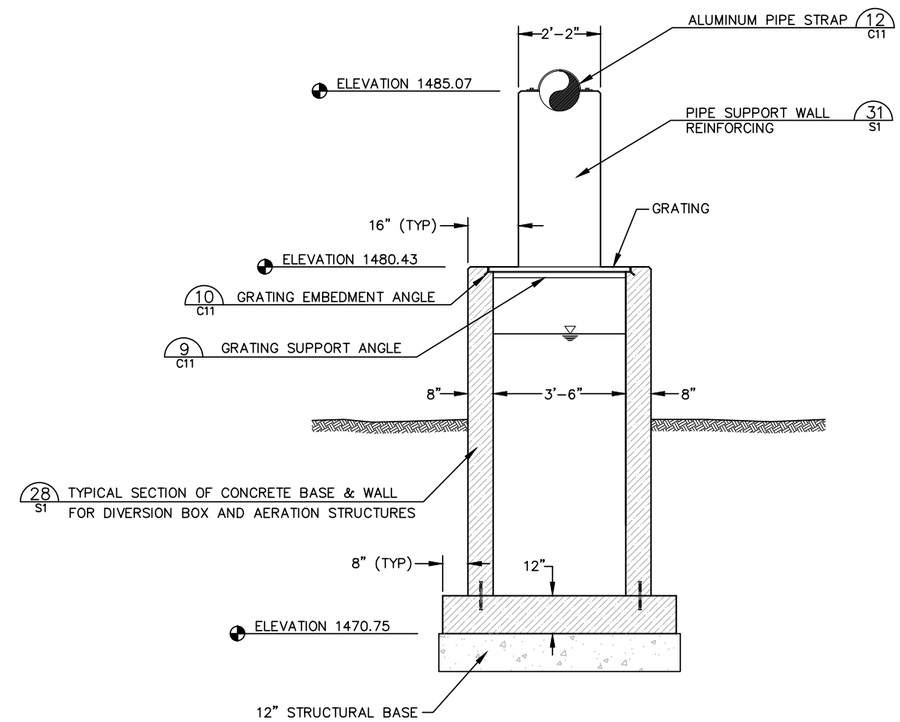

SECTION C

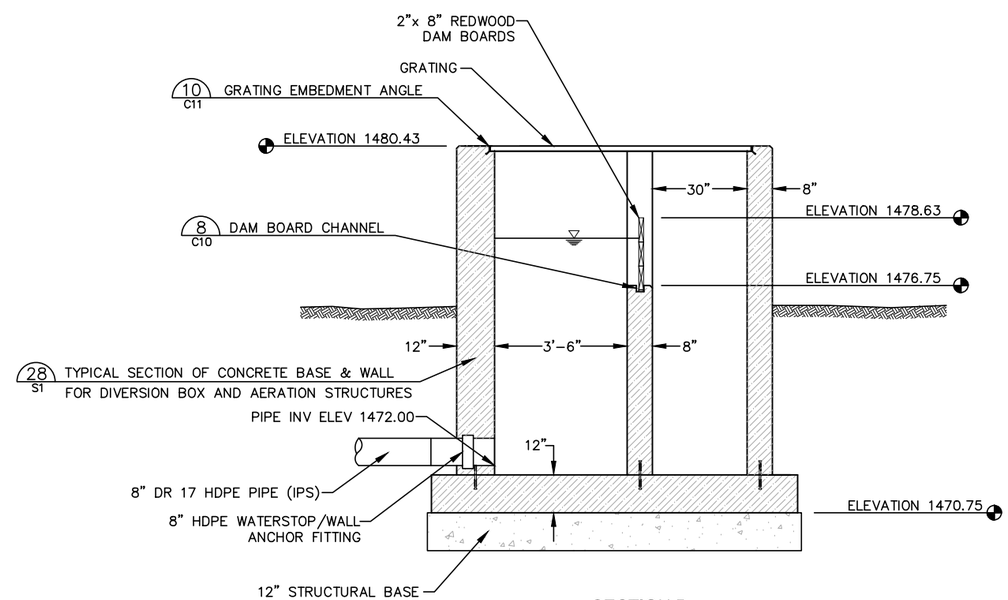

SECTION B

HATCHERY BUILDING AERATION STRUCTURE 4 C1,C3

SCALE 1/2"= 1'-0"

0 1"
VERIFY SCALE
THIS LINE IS ONE INCH LONG IN THE ORIGINAL DRAWING

LARSON CIVIL ENGINEERING, LLC
28 ANTLER AVENUE
CLANCY, MT 59634
406-443-6111
jeff@larsonce.com

REVISIONS:

NO.:	DATE	SYMBOL	DESCRIPTION

SHEET TITLE: HATCHERY BUILDING AERATION STRUCTURE DETAILS

PROJECT: BLUEWATER FISH HATCHERY TILLET SPRING CAP PROJECT NEAR BRIDGER, MONTANA

DATE: Feb. 27, 2013

DWG NAME: 33BluewtrBase.dwg

SHEET C8

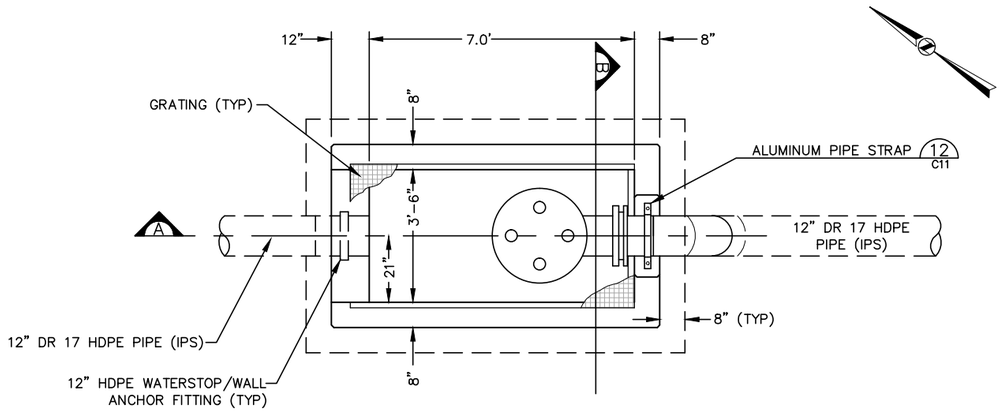

PLAN

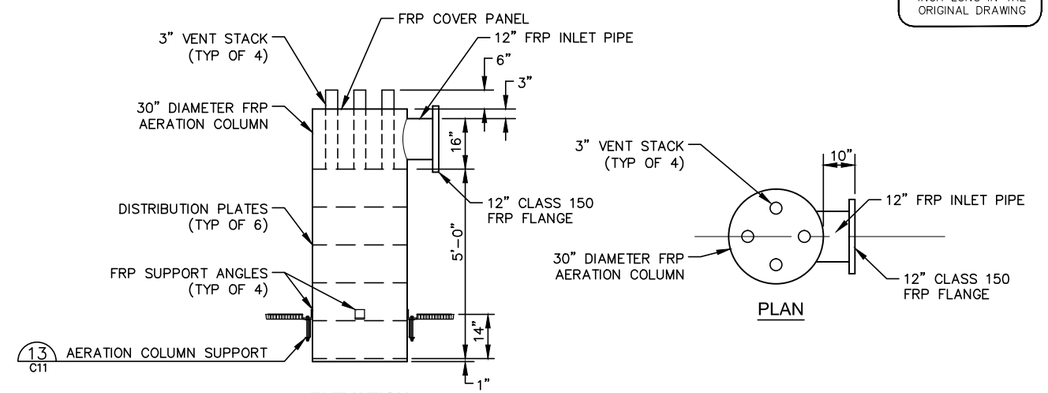

ELEVATION

PLAN

AERATION COLUMN 6 C8,C9

SCALE 1/2"= 1'-0"

0 1"
VERIFY SCALE
THIS LINE IS ONE INCH LONG IN THE ORIGINAL DRAWING

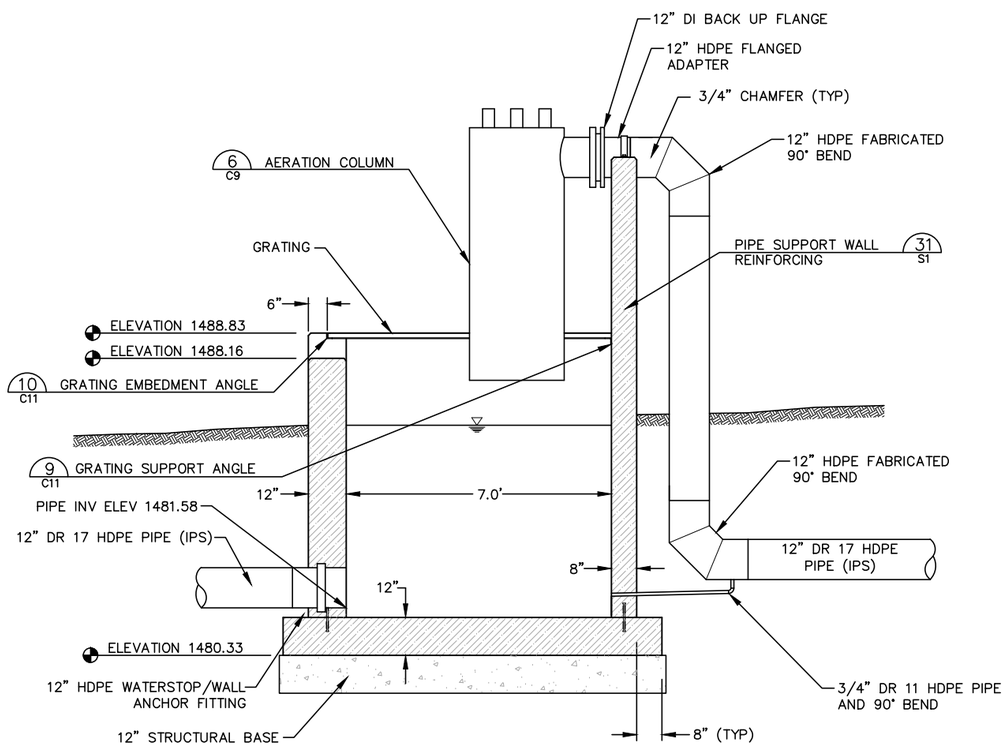

SECTION A

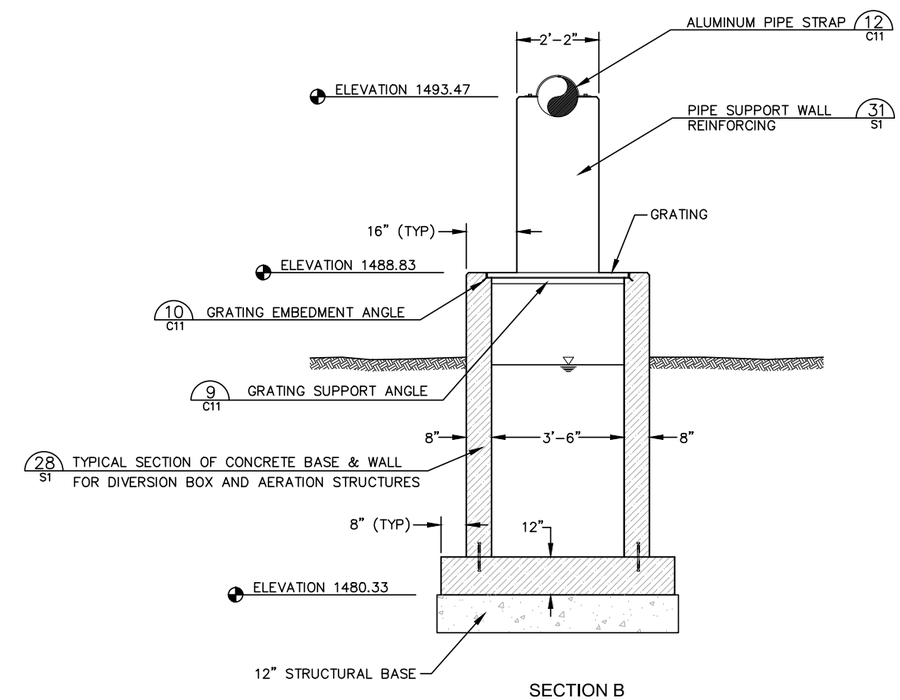

SECTION B

FIRST PASS AERATION STRUCTURE 5 C1,C3

SCALE 1/2"= 1'-0"

LARSON CIVIL ENGINEERING, LLC
28 ANTLER AVENUE
CLANCY, MT 59634
406-443-6111
jeff@larsonce.com

REVISIONS:

NO.:	DATE	SYMBOL	DESCRIPTION

SHEET TITLE: FIRST PASS AERATION STRUCTURE DETAILS

PROJECT: BLUEWATER FISH HATCHERY TILLET SPRING CAP PROJECT NEAR BRIDGER, MONTANA

DATE: Feb. 27, 2013

DWG NAME: 33BluewtrBase.dwg

SHEET C9

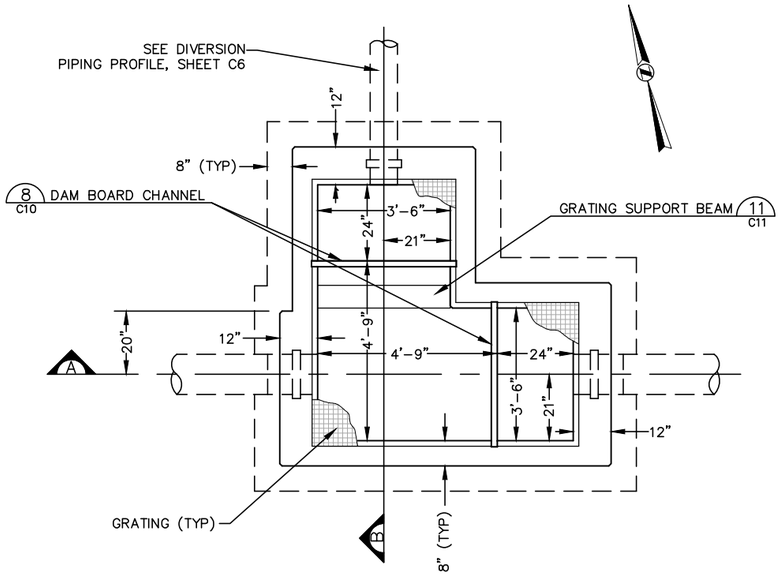

PLAN

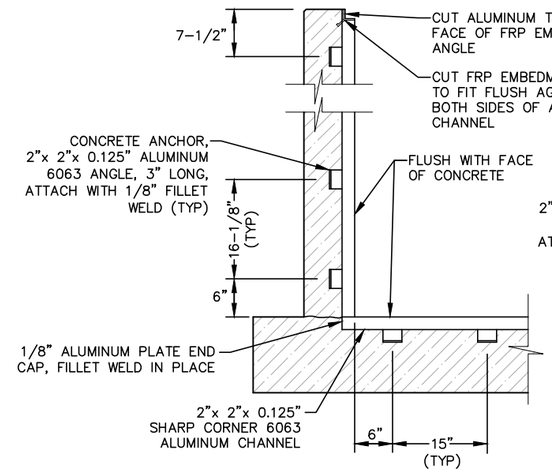

DIVERSION BOX

NOTE:
COAT ALL ALUMINUM SURFACES IN DIRECT CONTACT WITH CONCRETE WITH TWO COATS EPOXY COAL TAR.

0 1"
VERIFY SCALE
THIS LINE IS ONE INCH LONG IN THE ORIGINAL DRAWING

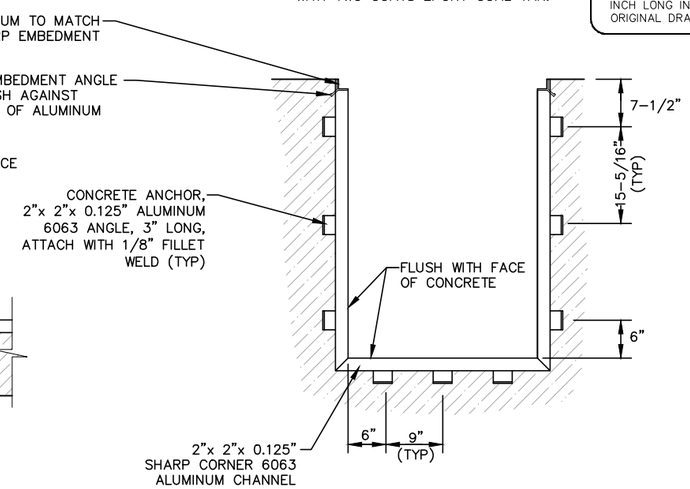

AERATION OVERFLOW BOX

DAM BOARD CHANNEL 8 C8,C10

SCALE 1"= 1'-0"

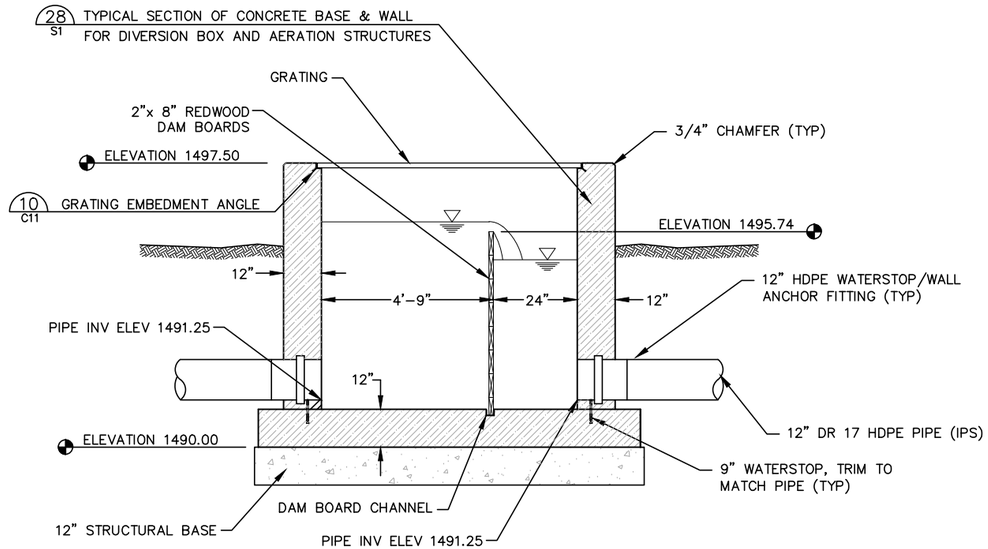

SECTION A

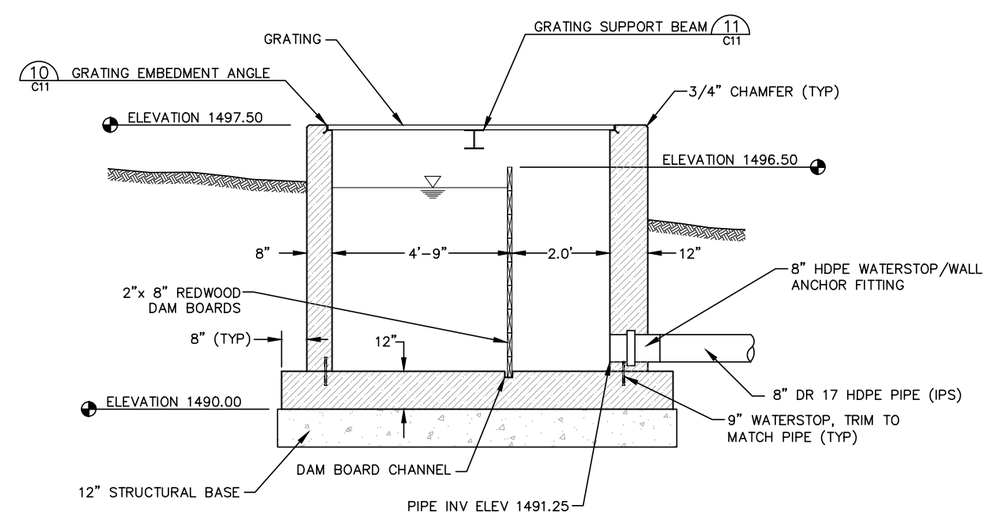

SECTION B

DIVERSION STRUCTURE 7 C1,C4

SCALE 1/2"= 1'-0"

LARSON CIVIL ENGINEERING, LLC
28 ANTLER AVENUE
CLANCY, MT 59634
406-443-6111
jeff@larsonce.com

REVISIONS:

NO.:	DATE	SYMBOL	DESCRIPTION

SHEET TITLE: DIVERSION STRUCTURE DETAILS

PROJECT: BLUEWATER FISH HATCHERY TILLET SPRING CAP PROJECT NEAR BRIDGER, MONTANA

DATE: Feb. 27, 2013

DWG NAME: 33BluewtrBase.dwg

SHEET C10

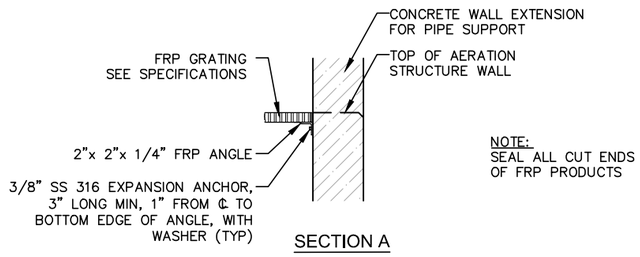

NOTE:
SEAL ALL CUT ENDS OF FRP PRODUCTS

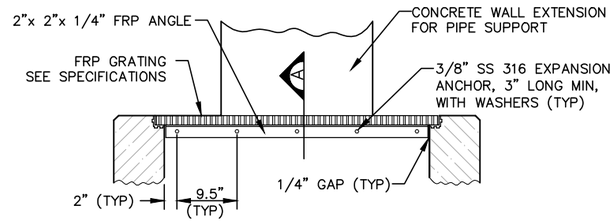

GRATING SUPPORT ANGLE (9) C8,C9

SCALE 1"= 1'-0"

NOTE:
SEAL ALL CUT ENDS OF FRP PRODUCTS

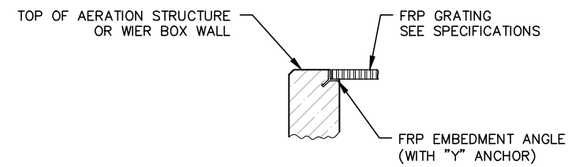

GRATING EMBEDMENT ANGLE (10) C8,C9,C10,C11

SCALE 1"= 1'-0"

NOTE:
BOLT PLACEMENT IS TYPICAL FOR BOTH LEGS OF THE ANGLE.

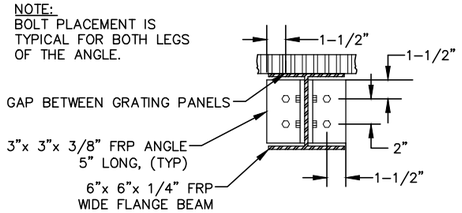

SCALE 1"= 6"

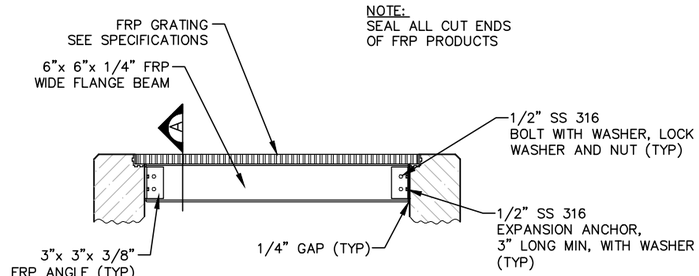

SCALE 1"= 1'-0"

NOTE:
SEAL ALL CUT ENDS OF FRP PRODUCTS

GRATING SUPPORT BEAM (11) C10

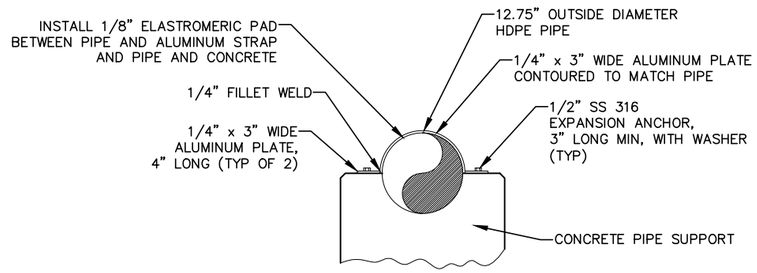

ALUMINUM PIPE STRAP (12) C8,C9

SCALE 1"= 1'-0"

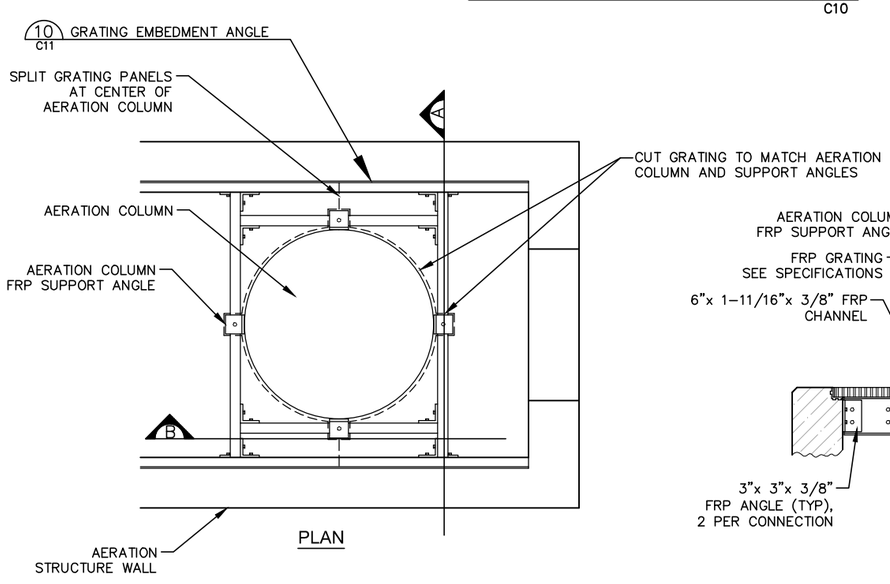

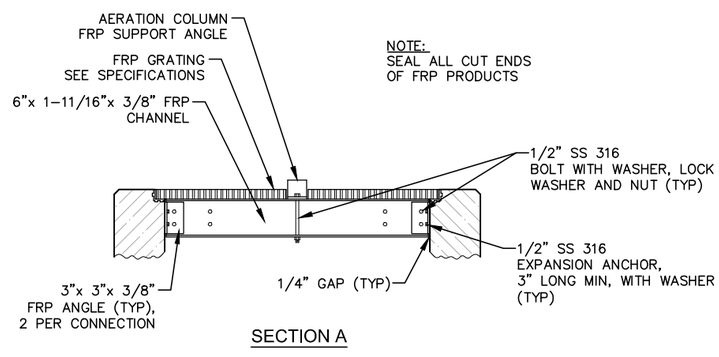

NOTE:
SEAL ALL CUT ENDS OF FRP PRODUCTS

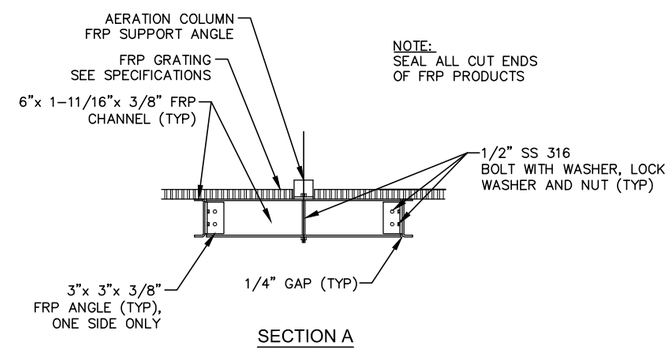

AERATION COLUMN SUPPORT (13) C9

SCALE 1"= 1'-0"

0 1"
VERIFY SCALE
THIS LINE IS ONE INCH LONG IN THE ORIGINAL DRAWING

LARSON CIVIL ENGINEERING, LLC
28 ANTLER AVENUE
CLANCY, MT 59634
406-443-6111
jeff@larsonce.com

REVISIONS:

NO.:	DATE	SYMBOL	DESCRIPTION

SHEET TITLE: GRATING AND FRP SUPPORTS

PROJECT: BLUEWATER FISH HATCHERY TILLET SPRING CAP PROJECT NEAR BRIDGER, MONTANA

DATE: Feb. 27, 2013

DWG NAME: 33BluewtrBase.dwg

SHEET C11

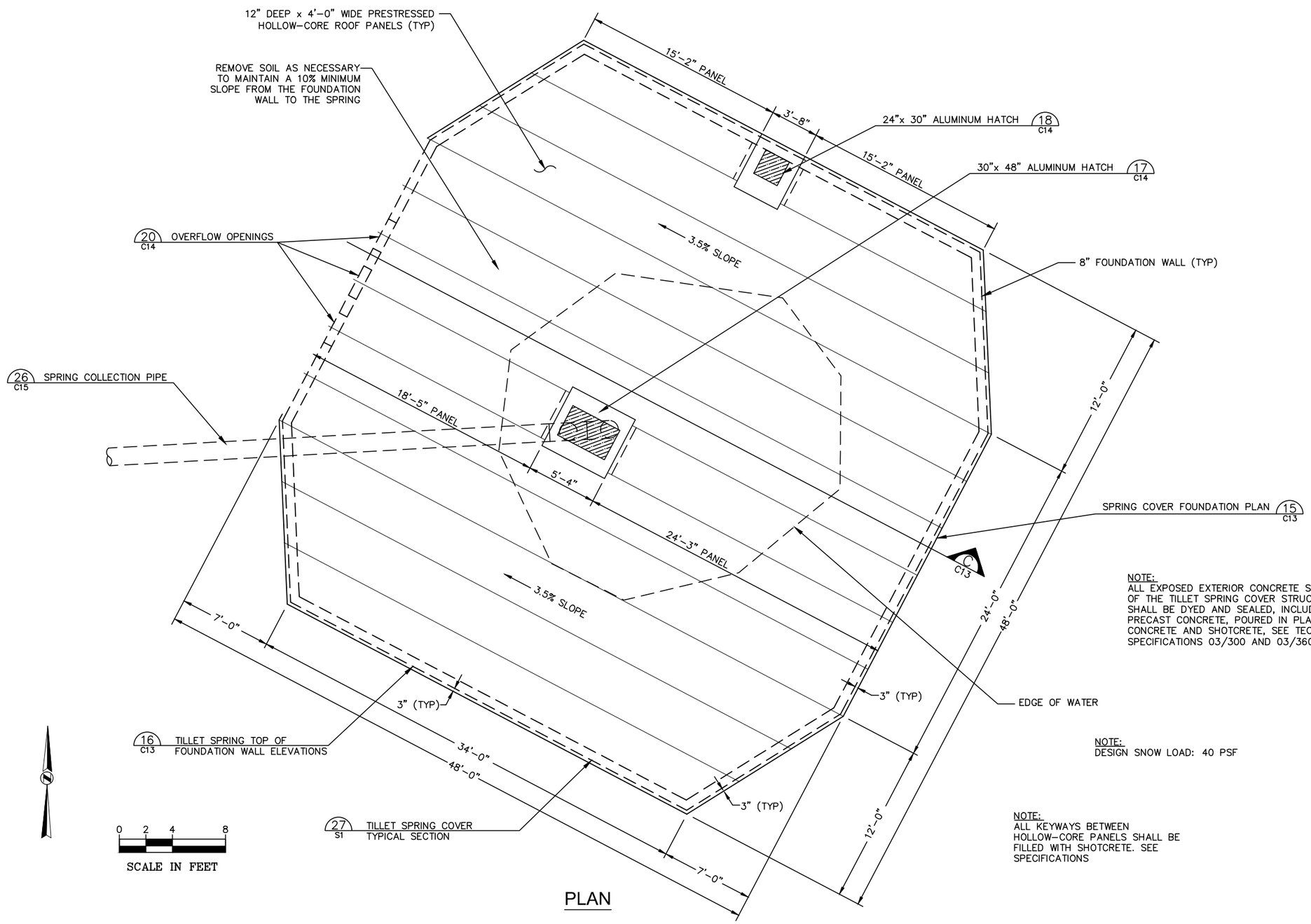

NOTE:
ALL EXPOSED EXTERIOR CONCRETE SURFACES OF THE TILLET SPRING COVER STRUCTURE SHALL BE DYED AND SEALED, INCLUDING PRECAST CONCRETE, POURED IN PLACE CONCRETE AND SHOTCRETE, SEE TECHNICAL SPECIFICATIONS 03/300 AND 03/360.

NOTE:
DESIGN SNOW LOAD: 40 PSF

NOTE:
ALL KEYWAYS BETWEEN HOLLOW-CORE PANELS SHALL BE FILLED WITH SHOTCRETE. SEE SPECIFICATIONS

PLAN

TILLET SPRING COVER STRUCTURE 14 C1,C4

SCALE 1/4"= 1'-0"

0 1"
VERIFY SCALE
THIS LINE IS ONE INCH LONG IN THE ORIGINAL DRAWING

LARSON CIVIL ENGINEERING, LLC
28 ANTLER AVENUE
CLANCY, MT 59634
406-443-6111
jeff@larsonce.com

REVISIONS:

NO.:	DATE	SYMBOL	DESCRIPTION

SHEET TITLE: TILLET SPRING COVER STRUCTURE PLAN

PROJECT: BLUEWATER FISH HATCHERY TILLET SPRING CAP PROJECT NEAR BRIDGER, MONTANA

DATE: Feb. 27, 2013

DWG NAME: 33BluewtrBase.dwg

SHEET C12

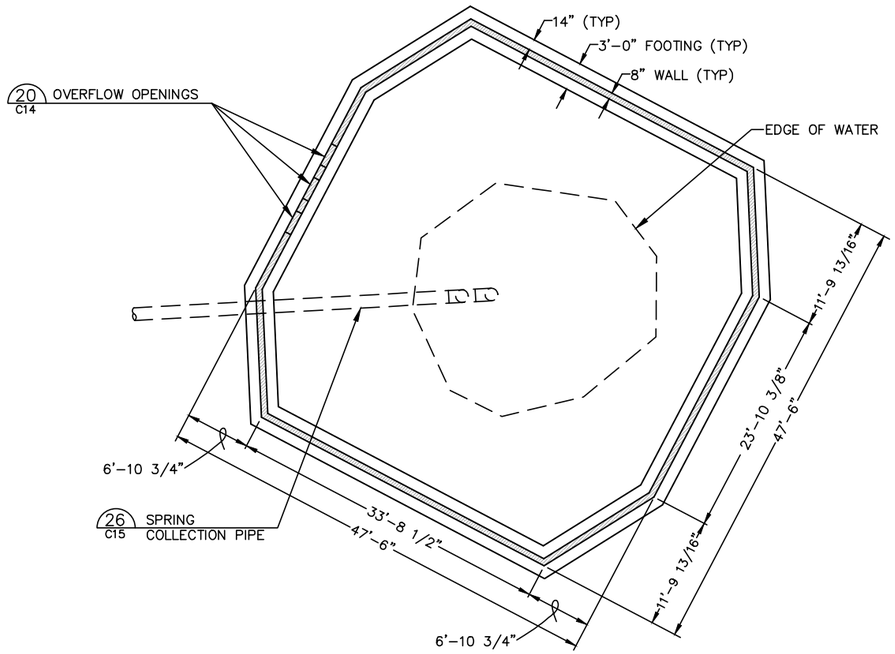

SPRING COVER FOUNDATION PLAN (15 / C12)
SCALE 1/8"= 1'-0"

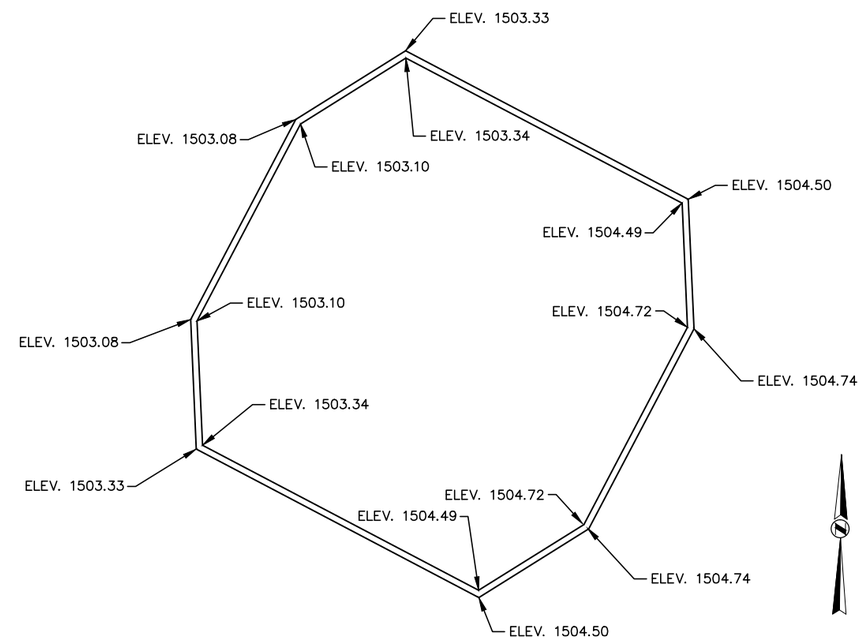

TILLET SPRING TOP OF FOUNDATION WALL ELEVATIONS (16 / C12)
SCALE 1/8"= 1'-0"

0 1"
VERIFY SCALE
THIS LINE IS ONE INCH LONG IN THE ORIGINAL DRAWING

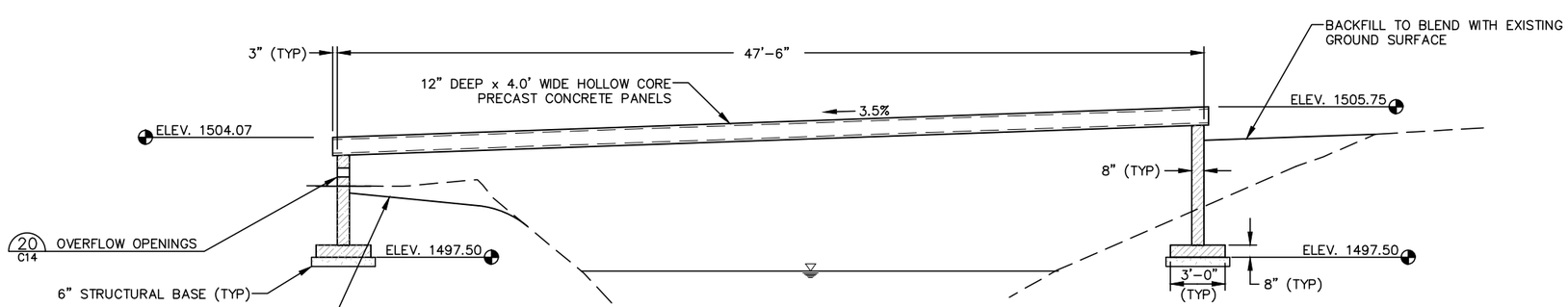

SECTION

TILLET SPRING COVER (C / C12)
SCALE 1/4"= 1'-0"

LARSON CIVIL ENGINEERING, LLC
28 ANTLER AVENUE
CLANCY, MT 59634
406-443-6111
jeff@larsonce.com

REVISIONS:

NO.:	DATE	SYMBOL	DESCRIPTION

SHEET TITLE: TILLET SPRING DETAILS

PROJECT: BLUEWATER FISH HATCHERY TILLET SPRING CAP PROJECT NEAR BRIDGER, MONTANA

DATE: Feb. 27, 2013

DWG NAME: 33BluewtrBase.dwg

SHEET C13

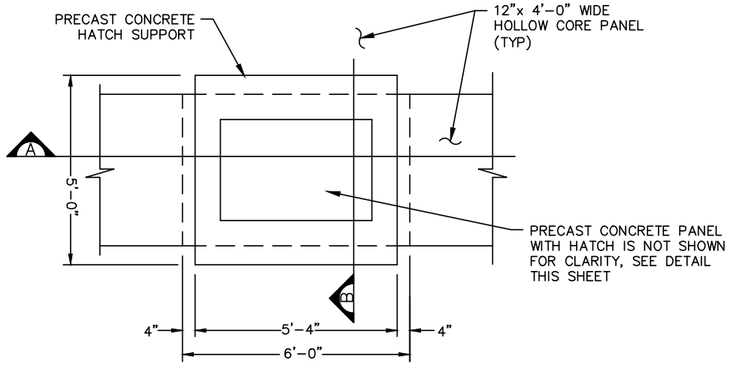

PLAN

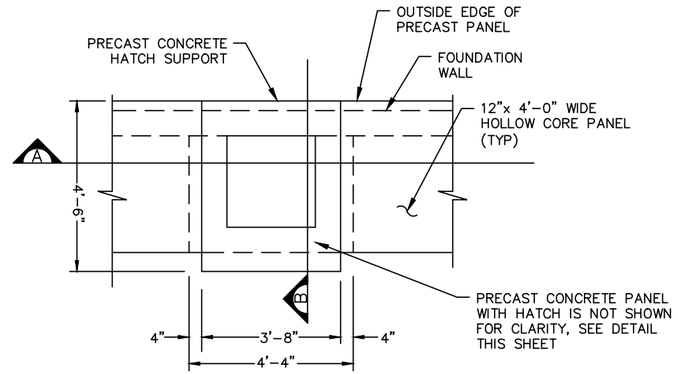

PLAN

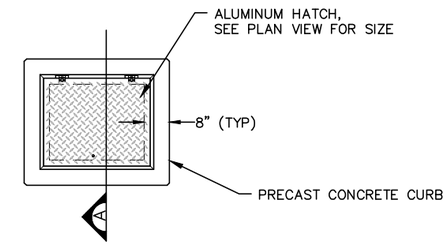

PLAN

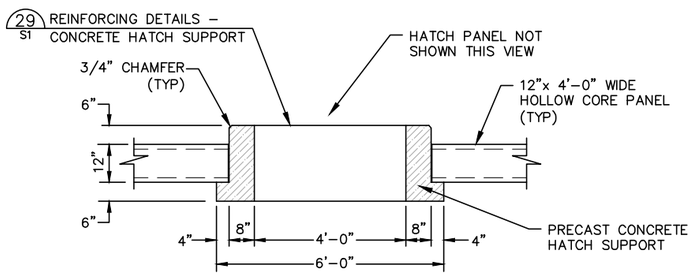

SECTION A

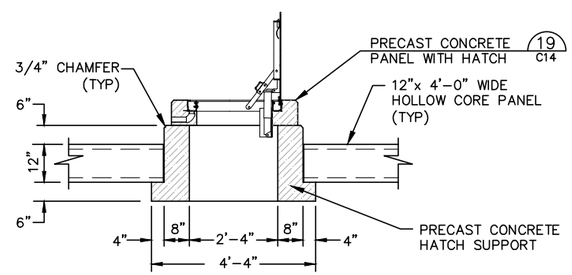

SECTION A

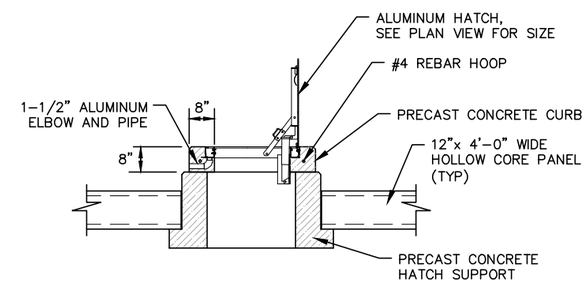

SECTION A

PRECAST CONCRETE PANEL WITH HATCH 19 C14

SCALE 1/2"= 1'-0"

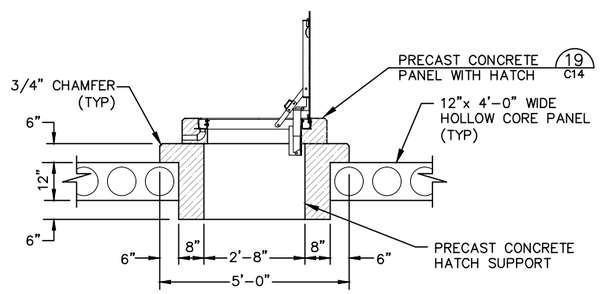

SECTION B

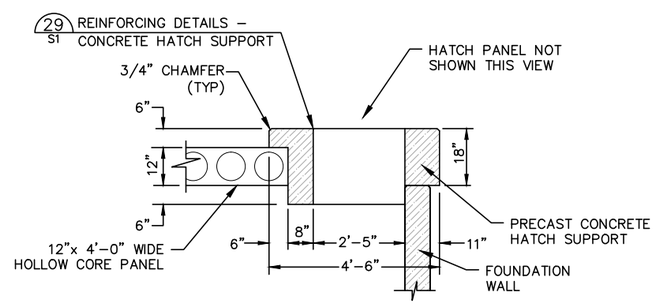

SECTION B

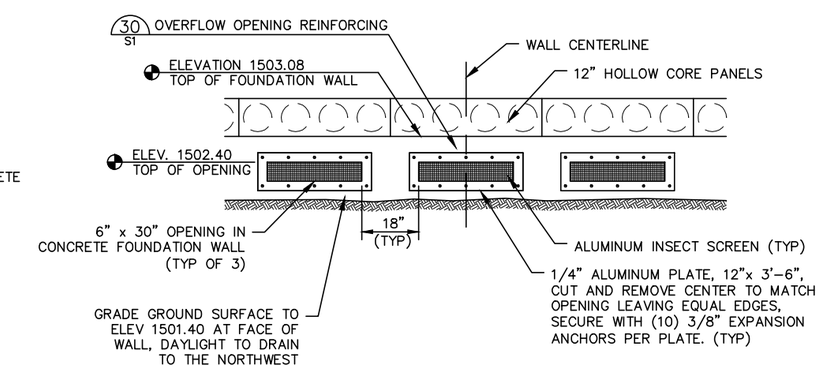

30"x48" ALUMINUM HATCH 17 C12

SCALE 1/2"= 1'-0"

24"x30" ALUMINUM HATCH 18 C12

SCALE 1/2"= 1'-0"

OVERFLOW OPENINGS 20 C12,C13

SCALE 1/2"= 1'-0"

0 1"
VERIFY SCALE
THIS LINE IS ONE INCH LONG IN THE ORIGINAL DRAWING

LARSON CIVIL ENGINEERING, LLC
28 ANTLER AVENUE
CLANCY, MT 59634
406-443-6111
jeff@larsonce.com

REVISIONS:

NO.:	DATE	SYMBOL	DESCRIPTION

SHEET TITLE: TILLET SPRING HATCH DETAILS

PROJECT: BLUEWATER FISH HATCHERY TILLET SPRING CAP PROJECT NEAR BRIDGER, MONTANA

DATE: Feb. 27, 2013

DWG NAME: 33BluewtrBase.dwg

SHEET C14

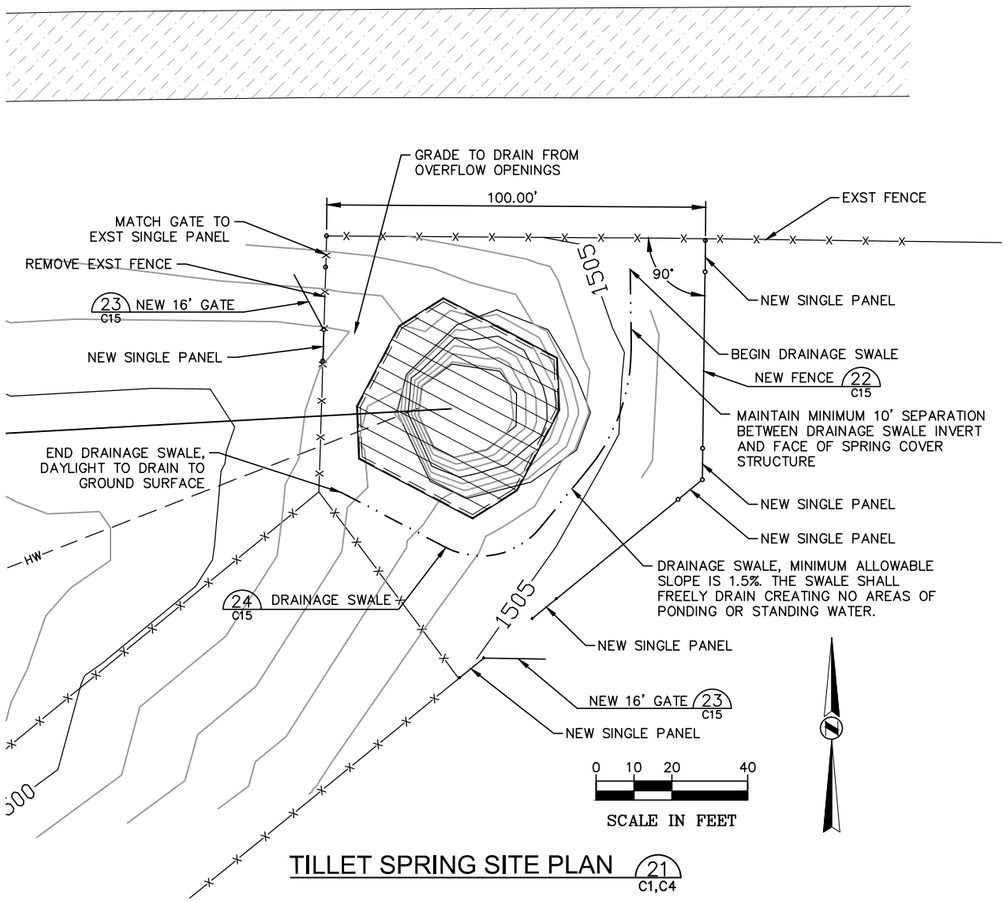

TILLET SPRING SITE PLAN 21 C1,C4

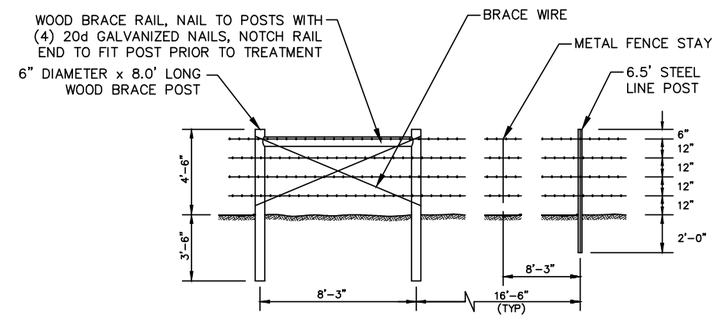

FENCE DETAIL 22 C15
NO SCALE

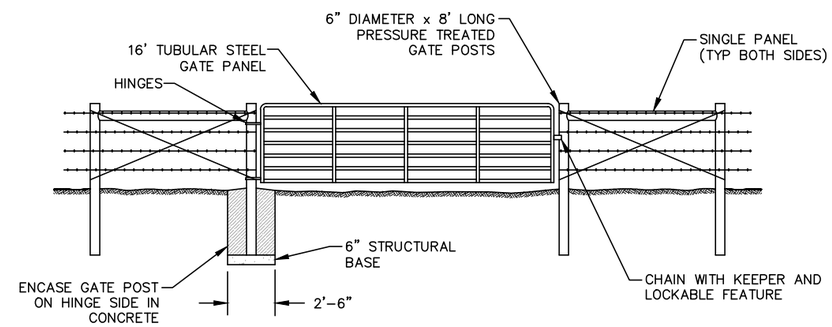

SINGLE PANEL GATE 23 C15
NO SCALE

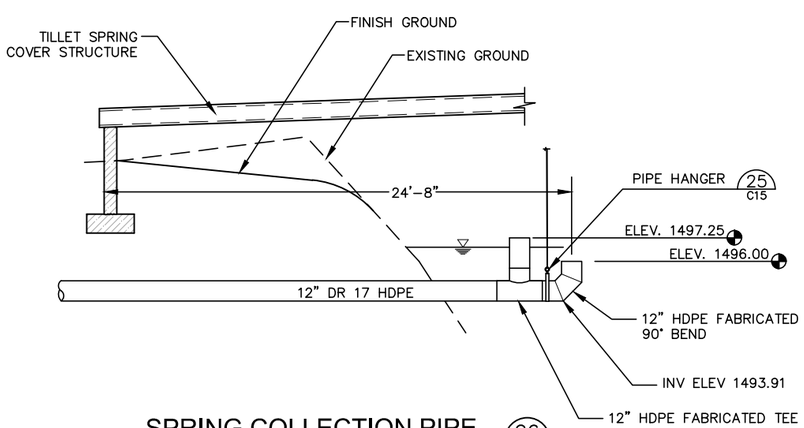

SPRING COLLECTION PIPE 26 C12,C13
SCALE 1/4"= 1'-0"

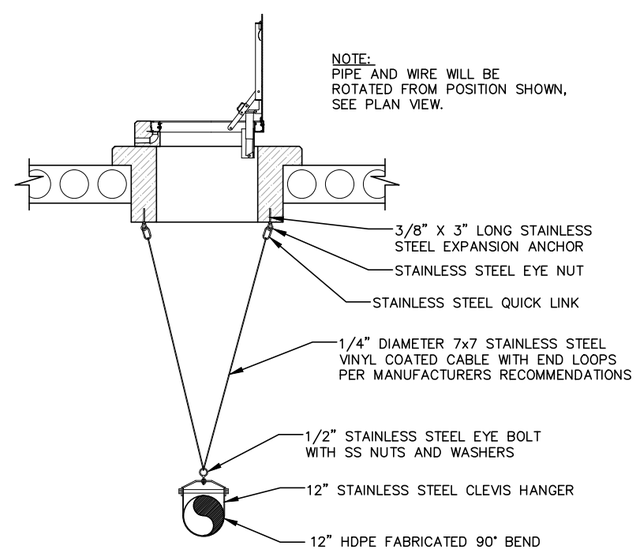

PIPE HANGER 25 C15
SCALE 1/2"= 1'-0"

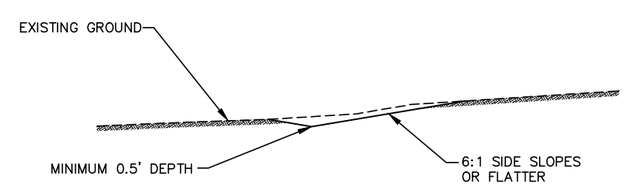

SWALE 24 C15
NO SCALE

0 1"
VERIFY SCALE
THIS LINE IS ONE INCH LONG IN THE ORIGINAL DRAWING

LARSON CIVIL ENGINEERING, LLC
28 ANTLER AVENUE
CLANCY, MT 59634
406-443-6111
jeff@larsonce.com

REVISIONS:

NO.:	DATE	SYMBOL	DESCRIPTION

SHEET TITLE: TILLET SPRING SITE IMPROVEMENTS

PROJECT: BLUEWATER FISH HATCHERY TILLET SPRING CAP PROJECT NEAR BRIDGER, MONTANA

DATE: Feb. 27, 2013

DWG NAME: 33BluewtrBase.dwg

SHEET C15

0 1"
VERIFY SCALE
THIS LINE IS ONE INCH LONG IN THE ORIGINAL DRAWING

NOTE:
ALL KEYWAYS BETWEEN HOLLOW–CORE PANELS SHALL BE FILLED WITH SHOTCRETE. SEE SPECIFICATIONS.

NOTE:
FINISH TOP OF FOUNDATION WALLS AT 3.5% SLOPE SO ALL WALLS ARE IN A PLANE PARALLEL TO THE ROOF. FURNISH AND INSTALL CONTINUOUS 1/8"x 4" ELASTOMERIC PADS ON WALL TOP BEFORE ROOF PANELS ARE SET.

BACKFILL NOTE:
PROVIDE 3.0' MINIMUM COVER OVER TOPS OF WALL FOOTINGS. USE EXCAVATED NATURAL SOILS.

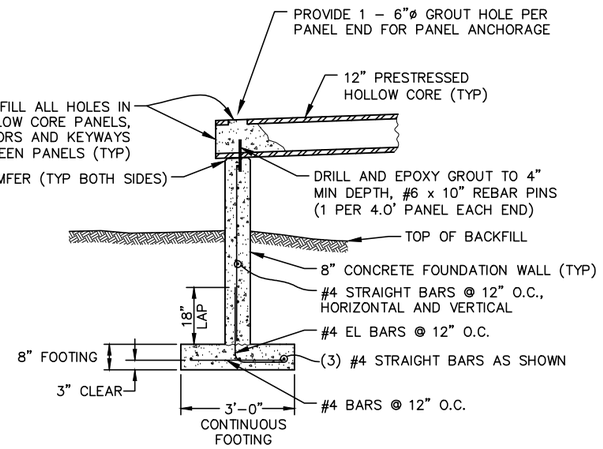

TILLET SPRING COVER TYPICAL SECTION (27) C12
SCALE 1/2"= 1'–0"

NOTE:
LARGER HATCH SUPPORT IS SHOWN, REINFORCING FOR SMALLER HATCH SUPPORT SIMILAR

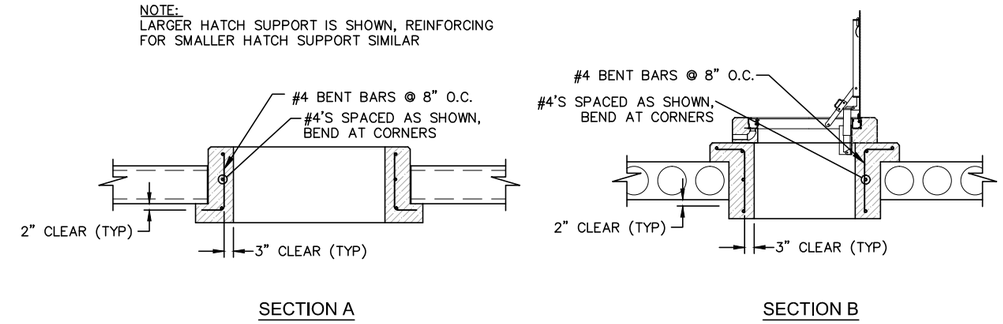

REINFORCING DETAILS - CONCRTE HATCH SUPPORT (29) C14
SCALE 1/2"= 1'–0"

WATERSTOP NOTE:
WATERSTOP SHALL BE WELL TIED TO HORIZONTAL BARS WHERE NOTED. EL BARS AND WATERSTOP SHALL BE SECURELY IN PLACE WHEN FOOTINGS ARE POURED.

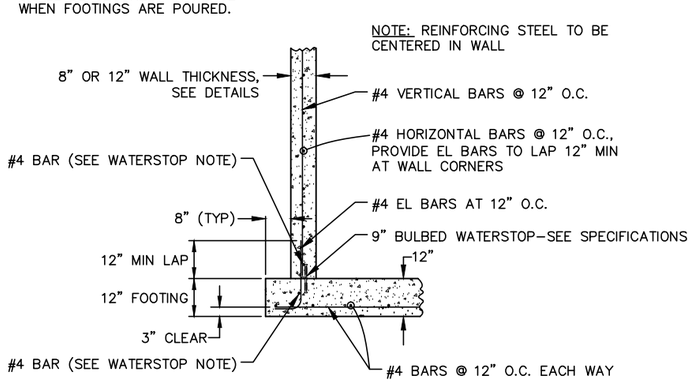

TYPICAL SECTION OF CONCRETE BASE & WALL FOR DIVERSION BOX AND AERATION STRUCTURES (28) C8,C9,C10
SCALE 1/2"= 1'–0"

NOTE:
OVERFLOW OPENING REINFORCING SHALL SUPPLEMENT STANDARD WALL REINFORCING

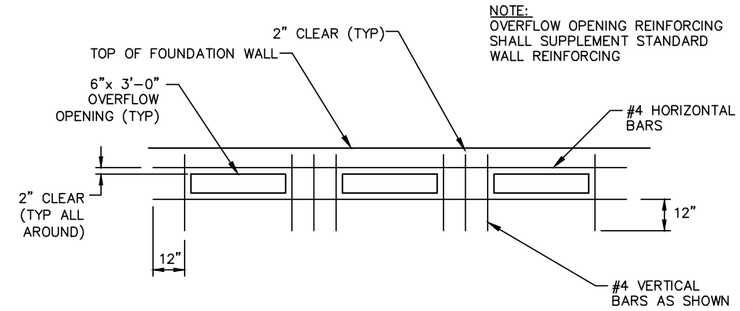

OVERFLOW OPENING REINFORCING (30) C14
SCALE 1/2"= 1'–0"

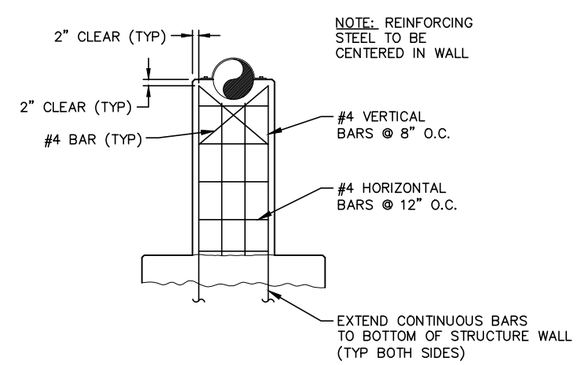

PIPE SUPPORT WALL REINFORCING (31) C8,C9
SCALE 1/2"= 1'–0"

LARSON CIVIL ENGINEERING, LLC
28 ANTLER AVENUE
CLANCY, MT 59634
406-443-6111
jeff@larsonce.com

REVISIONS:

NO.:	DATE	SYMBOL	DESCRIPTION

SHEET TITLE: STRUCTURAL DETAILS

PROJECT: BLUEWATER FISH HATCHERY TILLET SPRING CAP PROJECT NEAR BRIDGER, MONTANA

DATE: Feb. 27, 2013

DWG NAME: 33BluewtrBase.dwg

SHEET S1