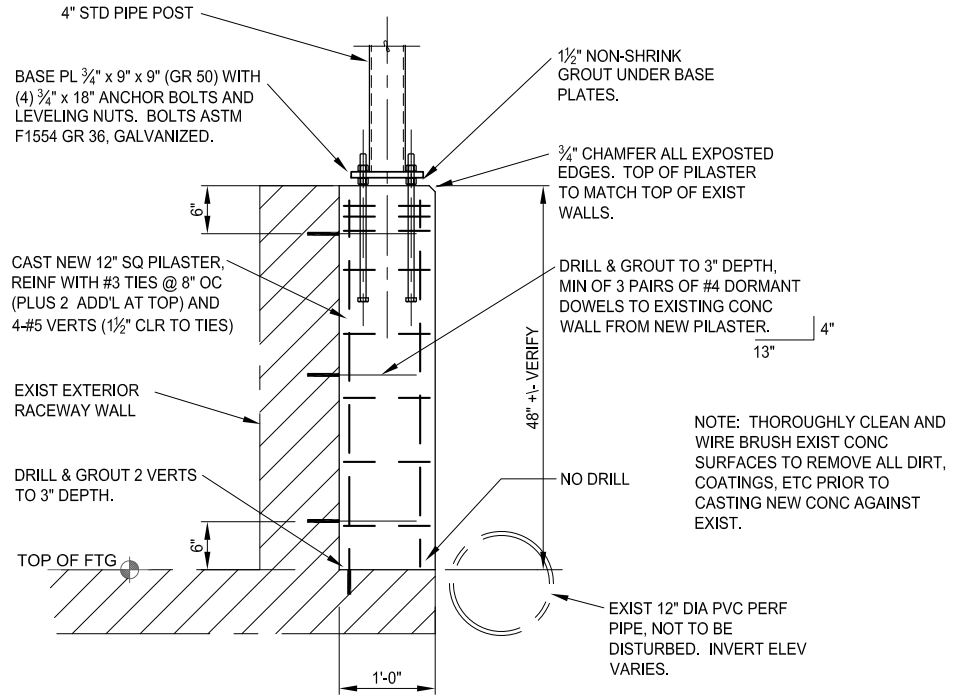

1 EXTERIOR WALL POST BASE

SCALE: 1" = 1'-0" RE: ____

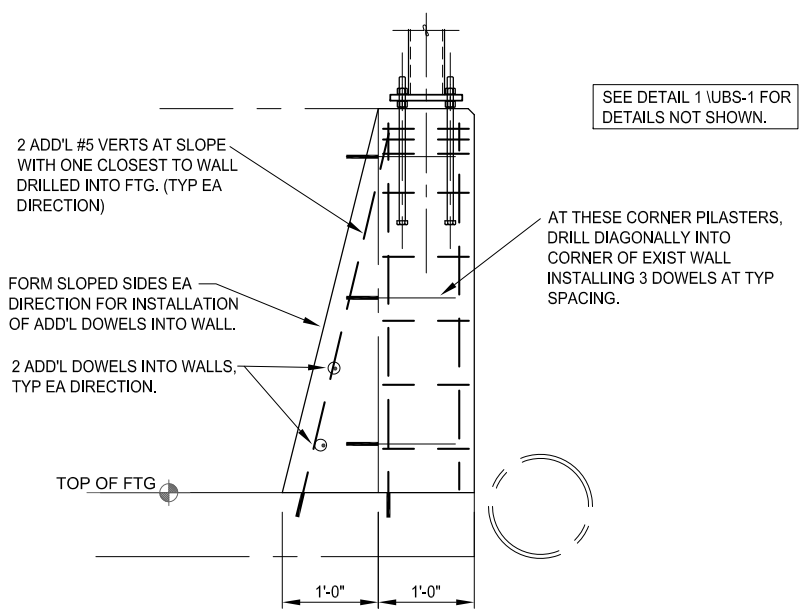

ELEVATION VIEW

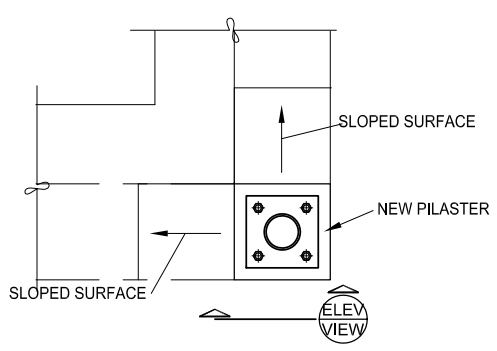

PLAN VIEW

2 EXTERIOR CORNER POST BASE

SCALE: 1" = 1'-0" RE: ____

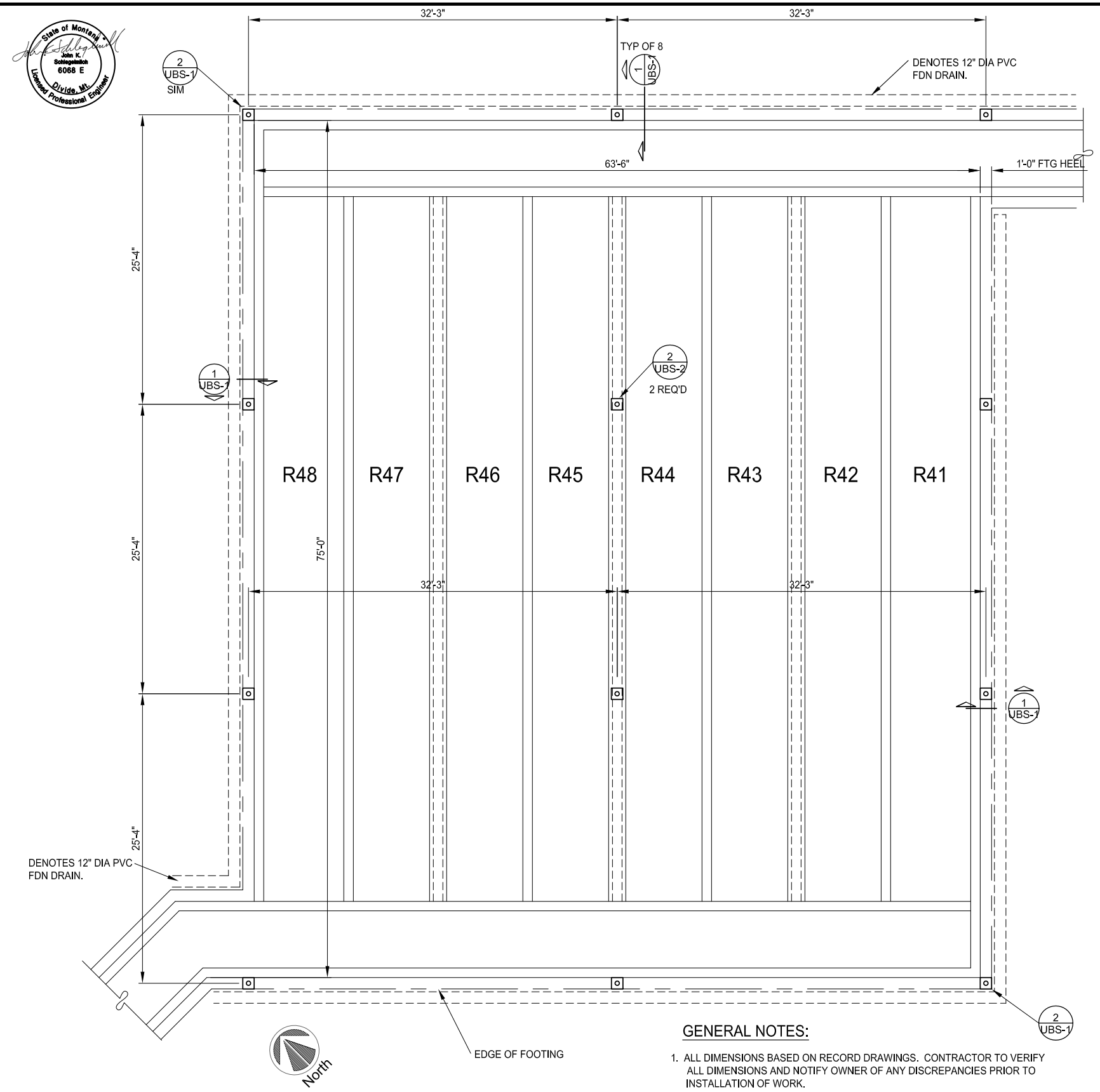

A UPPER RACEWAY GENERAL PLAN

SCALE: 3/16" = 1'-0" RE: ____

VERIFY SCALE
THESE PRINTS MAY HAVE BEEN REDUCED TO 1/2 SIZE. THE LINE BELOW MEASURES ONE INCH ON THE ORIGINAL DRAWING

GENERAL NOTES:

1. ALL DIMENSIONS BASED ON RECORD DRAWINGS. CONTRACTOR TO VERIFY ALL DIMENSIONS AND NOTIFY OWNER OF ANY DISCREPANCIES PRIOR TO INSTALLATION OF WORK.
2. TOP OF NEW PILASTERS TO MATCH TOP OF CONC RACEWAY WALLS.

MATERIAL NOTES:

1. CONCRETE, F'c = 4,000 PSI, AIR ENTRAINMENT 6 PERCENT +\- 1 PERCENT, 4" SLUMP.
2. STEEL PIPE, ASTM A53, GRADE B, STD WALL THICKNESS.
3. STEEL BASE PLATES, ASTM A572-50 OR A992, GR 50
4. STEEL ANCHOR BOLTS, ASTM F1554, GRADE 36, GALVANIZED
5. REINF STEEL, GRADE 60.
6. HEADED ANCHOR STUDS, ASTM A108, TYPE A
7. STEEL PIPE POSTS AND RAILS TO BE HOT-DIPPED GALVANIZED AFTER FABRICATION.
8. ALL STEEL BOLTS TO BE GALVANIZED, ASTM A325.

Copyright Robert Peccia & Associates

RPA

SYM	REVISION	BY	APPR.	DATE

JKS DESIGNED BY — April 2013 DATE
JKS DRAWN BY — 13702.0 PROJECT NO.
C.J. CHECKED BY — FILE

PROJECT TITLE
BIG SPRINGS TROUT HATCHERY UPPER RACEWAY IMPROVEMENTS
Lewistown, Montana

SHEET TITLE
UPPER RACEWAYS BIRD SCREEN GENERAL PLAN

SHEET
UBS-1

State of Montana
John K. Schlegelmilch
6068 E
Dixie, Mt.
Licensed Professional Engineer

VERIFY SCALE
THESE PRINTS MAY HAVE BEEN REDUCED TO 1/2 SIZE. THE LINE BELOW MEASURES ONE INCH ON THE ORIGINAL DRAWING

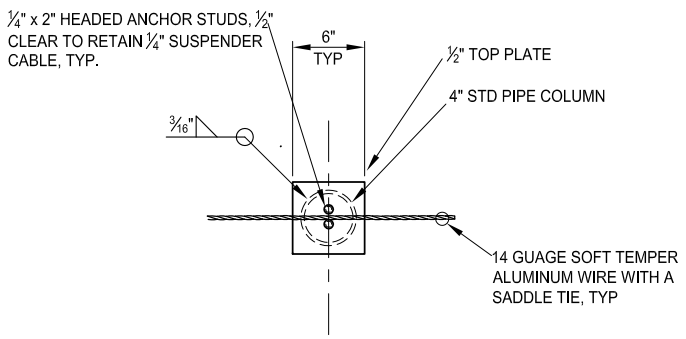

PLAN VIEW

1 INTERIOR POST TOP CONN

SCALE: 1" = 1'-0" RE: ____

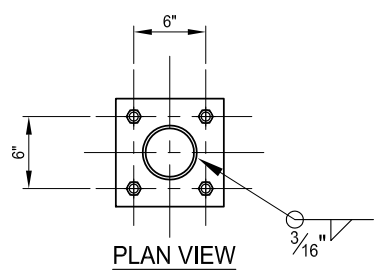

PLAN VIEW

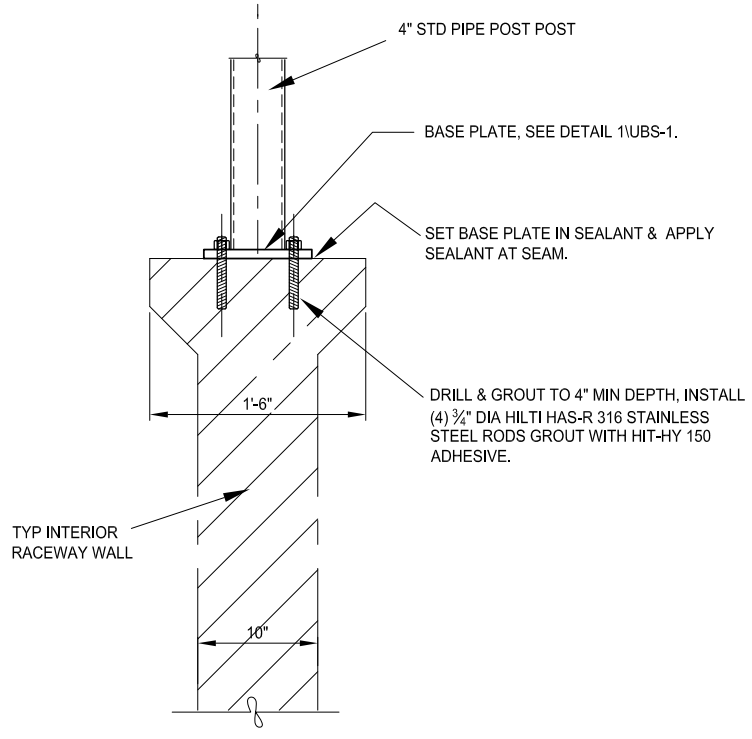

2 INTERIOR POST BASE CONN

SCALE: 1 1/2" = 1'-0" RE: ____

CABLE CEILING NOTES:

1. CABLES TO BE PARALLEL WITH TOP OF RACEWAY WALLS, WITH APPROXIMATELY 3" OF CLEARANCE ABOVE CHAIN LINK FENCE.
2. MAIN SUSPENDER CABLE, ¼" DIA GALVANIZED AIRCRAFT CABLE. INSTALL WITH APPROX 2.5" SAG AT MIDSPAN.
3. BIRDWIRE CABLE, 3/32" GALVANIZED AIRCRAFT CABLE. INSTALL WITH APPROX 1" SAG AT MIDSPAN.
4. ALL CABLE ACCESSORIES TO BE GALVANIZED FINISH, UNLESS NOTED OTHERWISE.

CHAIN LINK FENCE NOTES:

1. CHAIN LINK FENCE MATERIAL SHALL BE MADE FROM HELICALLY WOUND AND INTER WOVEN WIRE TO FORM A CONTINUOUS MESH WITH APPROXIMATELY UNIFORM 2" SQUARE OPENINGS WITH PARALLEL SIDES AND HORIZONTAL AND VERTICAL DIAGONALS. WIRE FABRIC SHALL BE WOVEN FROM 9-GAUGE ZINC COATED WIRE.
2. CABLE SUPPORT POSTS TO BE INCORPORATED INTO FENCE WHERE POSSIBLE, MAY BE USED AS FENCE POSTS AND WILL ADEQUATELY STABILIZE FENCE IN LIEU OF TYPICAL TRUSS RODS.
3. CONTRACTOR TO DETERMINE FENCE POST SPACING TO SUIT SITE LAYOUT. SUBMIT ALL DETAILS OF FENCING PRIOR TO FABRICATION.

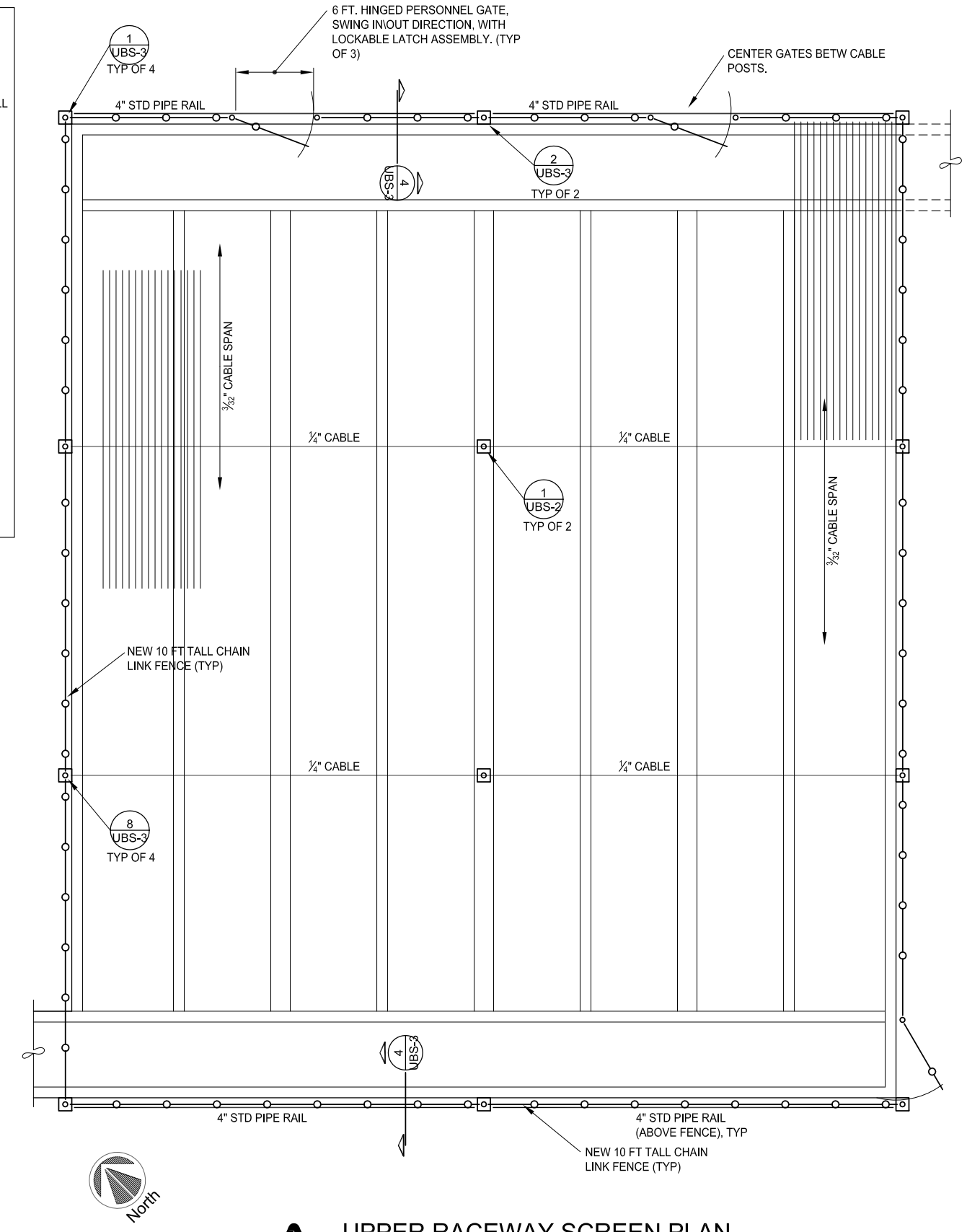

A UPPER RACEWAY SCREEN PLAN

SCALE: 3/16" = 1'-0" RE: ____

Copyright Robert Peccia & Associates

RPA

SYM.	REVISION	BY	APPR.	DATE

JKS DESIGNED BY
JKS DRAWN BY
C.J. CHECKED BY
April 2013 DATE
13702.0 PROJECT NO.
FILE

PROJECT TITLE
BIG SPRINGS TROUT HATCHERY UPPER RACEWAY IMPROVEMENTS
Lewistown, Montana

SHEET TITLE
UPPER RACEWAYS BIRD SCREEN SCREEN PLAN

SHEET
UBS-2

1 OF 3

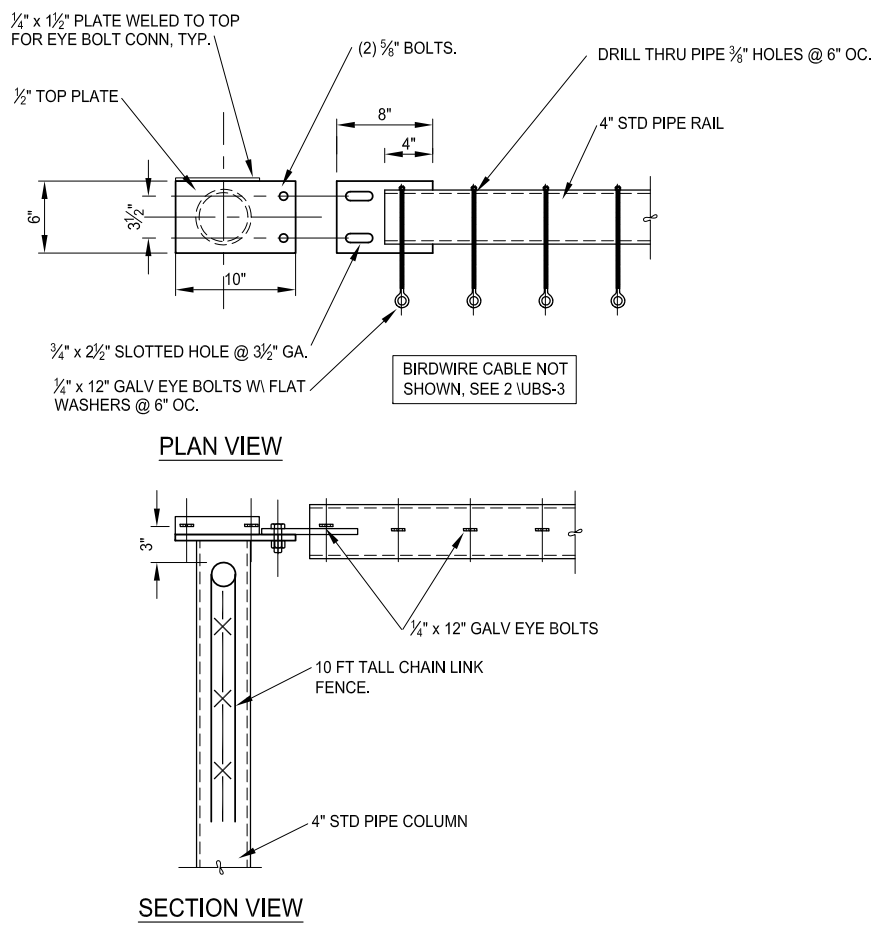

1 PIPE RAIL END CONN
SCALE: 1-1/2" = 1'-0" RE: ____

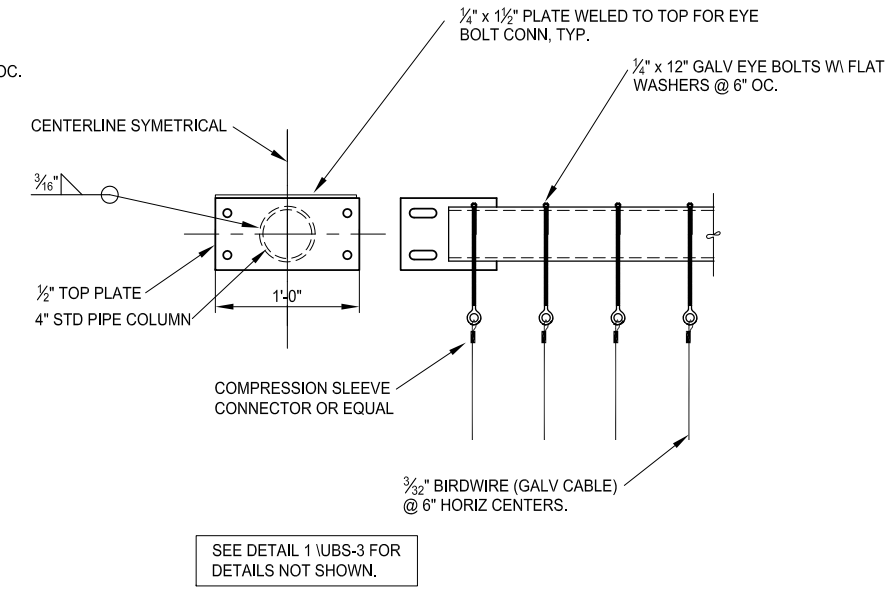

2 PIPE RAIL CENTER CONN
SCALE: 1-1/2" = 1'-0" RE: ____

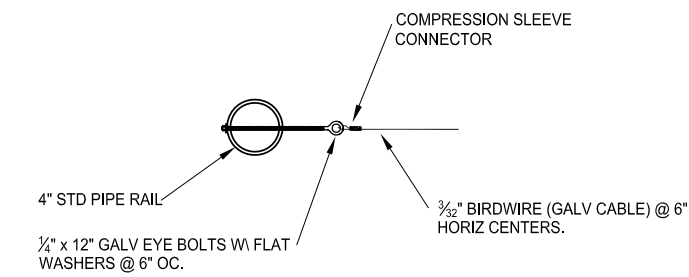

4 CABLE CONN @ TOP RAIL
SCALE: 1-1/2" = 1'-0" RE: ____

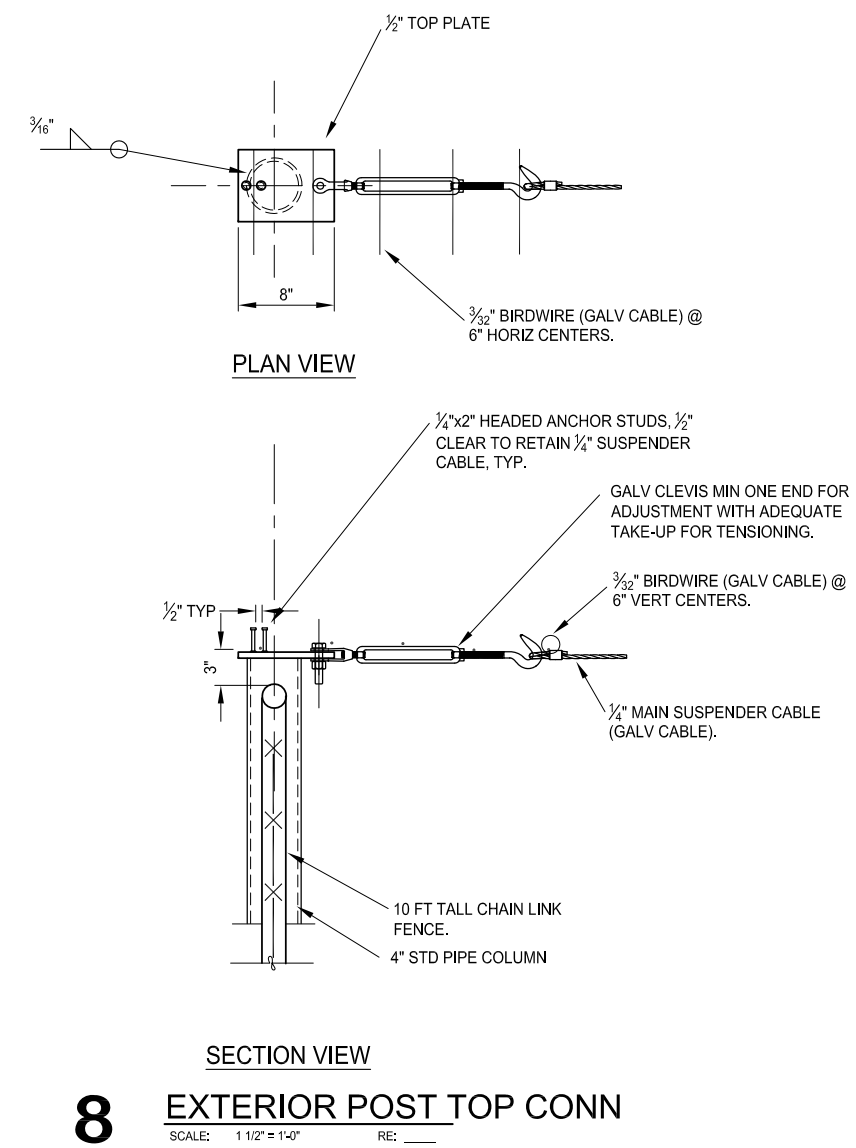

8 EXTERIOR POST TOP CONN
SCALE: 1 1/2" = 1'-0" RE: ____

VERIFY SCALE
THESE PRINTS MAY HAVE BEEN REDUCED TO 1/2 SIZE. THE LINE BELOW MEASURES ONE INCH ON THE ORIGINAL DRAWING

Copyright Robert Peccia & Associates

State of Montana John K. Schlegelmilch 6068 E Divide, Mt. Licensed Professional Engineer

SYM	REVISION	BY	APPR.	DATE

April 2013 DATE
13702.0 PROJECT NO.
JKS DESIGNED BY
JKS DRAWN BY
C.J. CHECKED BY
FILE

PROJECT TITLE
BIG SPRINGS TROUT HATCHERY UPPER RACEWAY IMPROVEMENTS
Lewistown, Montana

SHEET TITLE
UPPER RACEWAYS BIRD SCREEN DETAILS

SHEET
UBS-3