U.S. DEPARTMENT OF AGRICULTURE
FOREST SERVICE, REGION 1

ROAD AND CULVERT PLANS FOR:

KLONDIKE CREEK CULVERT REPLACEMENT

N BEAVER CREEK ROAD, NFSR 4106, MP 5.5

LINCOLN RANGER DISTRICT
HELENA NATIONAL FOREST
LEWIS & CLARK COUNTY, MONTANA

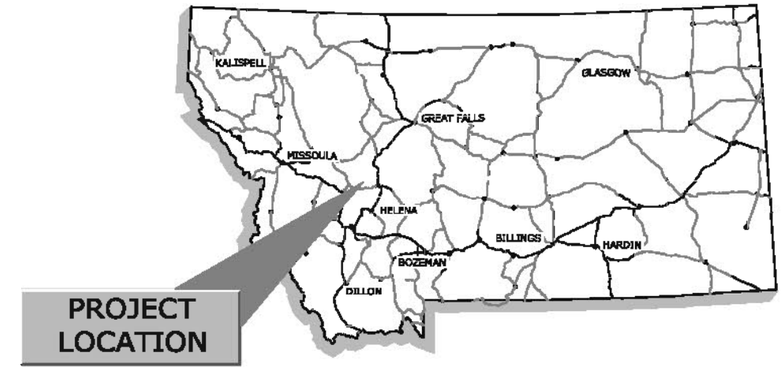

LOCATION MAP

INDEX TO SHEETS	
NO.	DESCRIPTION
1	TITLE SHEET
2	SUMMARY OF QUANTITIES & GENERAL NOTES
3	TYPICAL SECTIONS & DETAILS
4	ROAD PLAN & PROFILE
5	BRIDGE GENERAL LAYOUT
6	RIPRAP & STREAM DETAILS
7	FOUNDATION PLAN & DETAILS
8 - 10	ABUTMENT DETAILS
11 - 12	SUPERSTRUCTURE DETAILS
XS1 - XS2	ROADWAY CROSS SECTIONS

MATERIAL SOURCES

GOVERNMENT SUPPLIED:
WASTE SITE

CONTRACTOR SUPPLIED:
CRUSHED AGGREGATE SURFACING
RIPRAP
GRANULAR BACKFILL

MONTANA
MICHAEL THOMAS JENSEN
13098PE
REGISTERED
PROFESSIONAL ENGINEER
8/31/2012

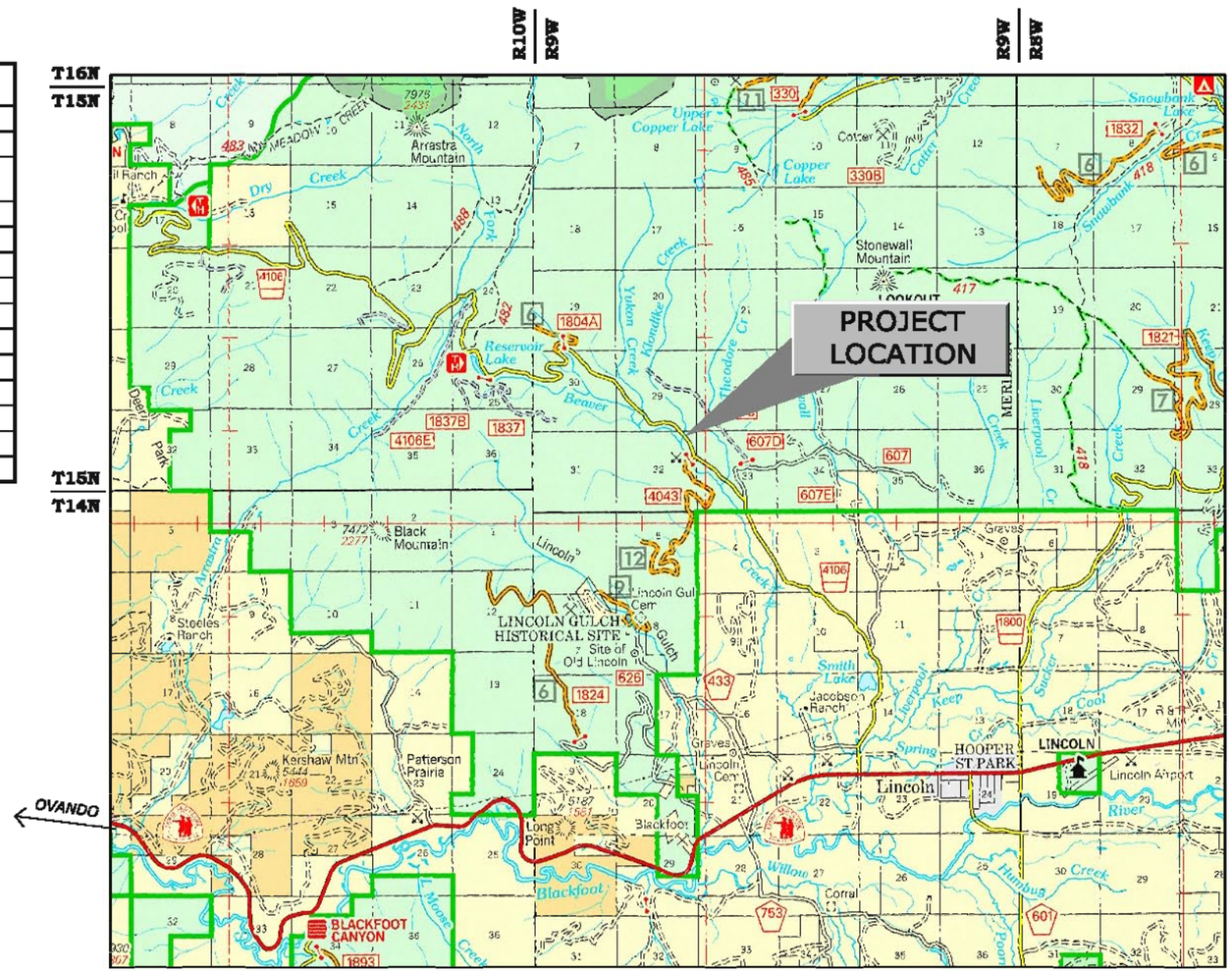

VICINITY MAP

RECOMMENDED:

_____ DATE _____
DISTRICT RANGER
LINCOLN RANGER DISTRICT

REVIEWED:

_____ DATE _____
FOREST ENGINEER
HELENA NATIONAL FOREST

APPROVED:

_____ DATE _____
FOREST SUPERVISOR
HELENA NATIONAL FOREST

APPROVED:

_____ DATE _____
REGIONAL ENGINEER
NORTHERN REGION

DJ&A, P.C.
CONSULTING ENGINEERS & LAND SURVEYORS
3203 RUSSELL STREET, MISSOULA, MONTANA 59801-5591
PHONE 406/721-4220 FAX 406/549-5371

SUMMARY OF ESTIMATED QUANTITIES

ITEM NO.	ITEM DESCRIPTION	MEASUREMENT		KLONDIKE CREEK 4106–5.5	PROJECT TOTALS
		METHOD	UNIT		
15101	MOBILIZATION	LSQ	Lump Sum	YES	1
15713	SOIL EROSION AND POLLUTION CONTROL	LSQ	Lump Sum	YES	1
20304	REMOVE AND DISPOSE EXISTING 48" DIA. CULVERT	AQ	Each	1	1
20806	STRUCTURE EXCAVATION	LSQ	Lump Sum	YES	1
25101	PLACED RIPRAP, CLASS 4 MACHINE PLACED (COMMERCIAL SOURCE)	CQ	Cubic Yard	150	150
25150	GRADE CONTROL (ROCK WEIR STEP POOL)	AQ	Each	3	3
27201	GEOCELL ABUTMENT STABILIZATION	CQ	Square Yard	28.9	28.9
30809A	CRUSHED AGGREGATE, SURFACING (COMMERCIAL SOURCE)	CQ	Cubic Yard	45	45
55301	PRECAST PRESTRESSED CONCRETE STRUCTURAL MEMBER, TRI-DECK BEAM	AQ	Each	3	3
553A01A	PRECAST CONCRETE MEMBER, GRADE BEAM	AQ	Each	2	2
553A01B	PRECAST CONCRETE MEMBER, WINGWALL	AQ	Each	4	4
62201	EQUIPMENT RENTAL, HYDRAULIC EXCAVATOR WITH THUMB	AQ	Hour	8	8
62202	EQUIPMENT RENTAL, LARGE DUMP TRUCK	AQ	Hour	8	8
63305	WOOD POSTS	AQ	Linear Foot	36	36
63306	OBJECT MARKERS	AQ	Each	4	4

CQ = Contract Quantity; AQ= Actual Quantity; LSQ = Lump Sum Quantity

DESIGN NOTES

BRIDGE DESIGN: This structure is designed for HL-93 loading in accordance with AASHTO LRFD Bridge Design Specifications, 5th edition, 2010 with current interims.

GENERAL NOTES

SPECIFICATIONS: Construct the project in compliance with Federal Highway Administration Standard Specifications for Construction of Road and Bridges on Federal Highway Projects (FP-03) and applicable Special Project Specifications.

EROSION CONTROL PLAN: Submit a soil erosion plan to the Contracting Officer for approval at least seven (7) days prior to beginning work. See Section 157 of the Supplemental Project Specifications for details. Construct temporary means to divert the flow of the live stream as necessary to perform work. Do not pump water from excavations directly into the live stream.

The contractor is allowed to cross the live stream with equipment a maximum of four (4) times.

DISPOSAL: All materials designated for removal become the property of the Contractor and are to be disposed of by removing from site in an environmentally safe manner in accordance with all Local, State and Federal requirements.

TEMPORARY TRAFFIC CONTROL: Submit a Temporary Traffic Control Plan to the Contracting Officer for approval at least 30 days prior to intended use. See Section 156 of the Supplemental Project Specifications for requirements.

CONCRETE: Use Class A(AE) for all Precast, non-prestressed concrete with F'c = 5000 psi at 28 days and an entrained air content of 5% ± 1%. Finish all precast elements with a Class 2- Rubbed Finish.

Use Class "P" Prestressed concrete with strength requirements as determined by the prestressed beam fabricator, except as follows. The minimum 28-day compressive strength is 5500 psi (F'c = 5500 psi) and the minimum compressive strength at transfer of prestress force is 3500 psi (F'ci = 3500 psi). In the top two inches of the prestressed beams, use concrete with an entrained air content of 5% ±1%.

Make all concrete in accordance with an approved mix design. Chamfer all exposed edges of concrete 3/4" and fillet all acute angles 3" unless otherwise noted.

REINFORCING STEEL: Use non-prestressed reinforcing of the deformed type conforming to AASHTO M31 (ASTM A615), Grade 60. Concrete cover shall be as shown; where not shown it shall conform to AASHTO. Cut and bend steel in accordance with ACI 315.

PRESTRESSING STEEL: Use prestressing steel of low-relaxation prestressing strand conforming to AASHTO M203, Grade 270.

HARDWARE AND STRUCTURAL STEEL: Use steel shapes, plates and bars meeting the requirements of ASTM A36. Galvanize all steel in accordance with AASHTO M111 (ASTM A123) unless otherwise noted. Use hardware meeting the requirements of ASTM A307 except as noted. Galvanize hardware in accordance with AASHTO M232 (ASTM A153) unless otherwise noted.

Weld in accordance with the Bridge Welding Code, AWS D1.5 with E70XX electrodes. A certified welder is required.

INSTALLATION OF PRESTRESSED BEAMS: Erect girders such that no more than 1/8" vertical variation exists between adjacent deck surfaces along centerline of bearing. Use galvanized steel shims where necessary. Furnish shims the same size as the elastomeric bearing pads and place the shims between the beams and the bearing pads. Galvanize the shims in accordance with AASHTO M232. In addition, insure that no more than 1/4" vertical variation exists between adjacent deck surfaces along the length of the beams prior to attaching weld ties and grouting the beam keyways. Outline a leveling procedure for approval on the beam shop drawings.

CONSTRUCTION STAKING: Construction staking will be provided by the Owner. Any re-staking will be at the Contractor's expense.

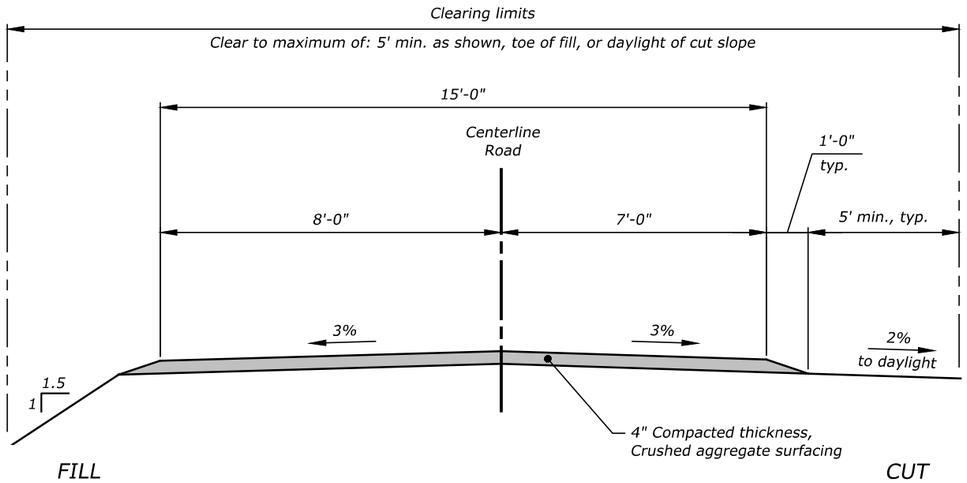

TYPICAL ROAD SECTION

Not to Scale

LEGEND

- Existing Edge of Road
- Existing Edge of Shoulder
- Existing Culvert
- Existing Edge of Water
- Existing Ditch
- 3900 Major Contour (5')
- Minor Contour (1')

CONTROL POINT TABLE

POINT #	ELEVATION	NORTHING	EASTING	DESCRIPTION
CP-1	3996.21	10153.46	9685.35	SET-PLASTIC-CAP
CP-2	4000.71	10097.61	9843.85	SET-PLASTIC-CAP
CP-3	4000.00	10000.00	10000.00	NAIL
CP-4	3988.69	9883.20	9963.04	NAIL
CP-5	4014.16	10138.81	10105.49	SS
CP-6	3993.06	9865.64	10081.06	SET- RPC
CP-7	3985.38	9744.00	10188.53	SET- RPC

CENTERLINE POINTS

POINT #	NORTHING	EASTING	ELEVATION	DESCRIPTION
6100	9906.1092	10063.2095	3996.25	STA 2+00
6101	9922.5884	10051.8764	3997.44	STA 2+20
6102	9931.9335	10045.4495	3998.11	STA 2+31.34 PC
6103	9954.6048	10027.9431	3999.73	STA 2+60
6104	9970.0951	10013.4102	4000.34	STA 2+81.25 PT
6105	9977.5070	10005.8639	4000.40	STA 2+91.82
6106	9978.2661	10005.0910	4000.40	STA 2+92.91 CL BRG
6107	10004.1931	9978.6941	4000.40	STA 3+29.91 CL BRG
6108	10004.9522	9977.9212	4000.40	STA 3+30.99
6109	10006.1545	9976.6971	4000.40	STA 3+32.71 PC
6110	10011.1586	9971.3915	4000.32	STA 3+40
6111	10023.7333	9955.8523	4000.15	STA 3+60
6112	10036.9919	9934.4587	4000.52	STA 3+85.19 PT
6113	10043.8946	9921.3552	4000.89	STA 4+00
6114	10053.2160	9903.6602	4001.10	STA 4+20
6115	10062.5374	9885.9653	4001.01	STA 4+40

LAYOUT POINT TABLE

Point #	Northing	Easting	Elevation	Description
5000	9969.35	9996.33	3995.09	Abut 1
5001	9986.47	10013.15	3995.09	Abut 1
5002	10012.40	9986.75	3995.09	Abut 2
5003	9995.28	9969.94	3995.09	Abut 2
6000	10009.93	10009.07	3994.60	Weir
6001	9997.97	9999.44	3993.50	Weir
6002	9986.53	9988.12	3992.40	Weir
6003	9985.32	9980.07	3991.50	Riprap
6004	9979.29	9986.21	3991.50	Riprap
6005	9996.42	10003.02	3993.00	Riprap
6006	10002.45	9996.88	3993.00	Riprap

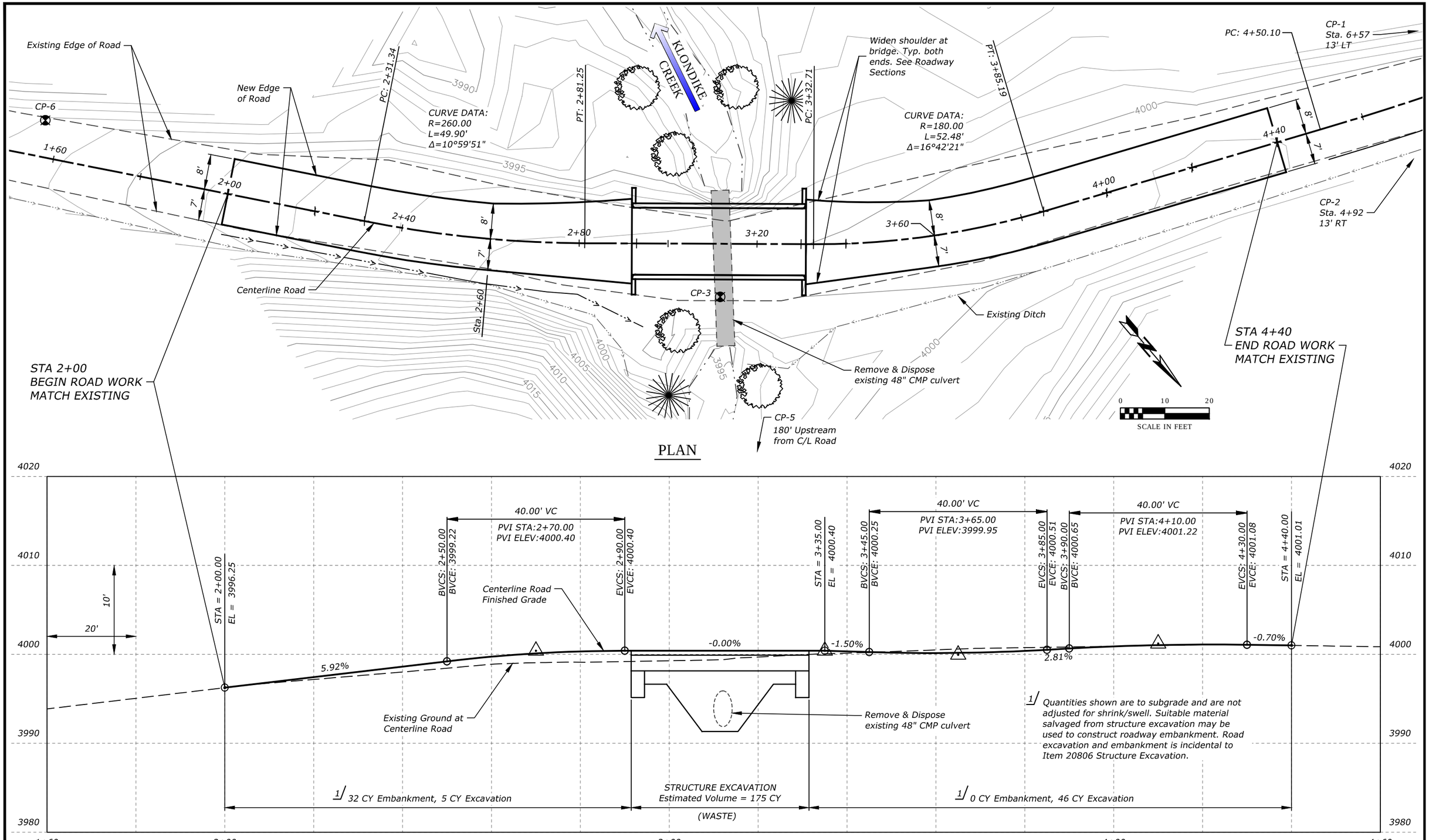

U.S. DEPARTMENT OF AGRICULTURE
FOREST SERVICE
HELENA NATIONAL FOREST
HELENA, MT

KLONDIKE CREEK CULVERT REPLACEMENT

ROADWAY PLAN & PROFILE

DESIGNED:	M. Jensen	DATE	
DRAWN:	M. Jensen	DATE	
CHECKED:	C. Thompson	DATE	
REVIEWED:		DATE	

DATE	REVISION	BY

FILENAME:

SHEET 4

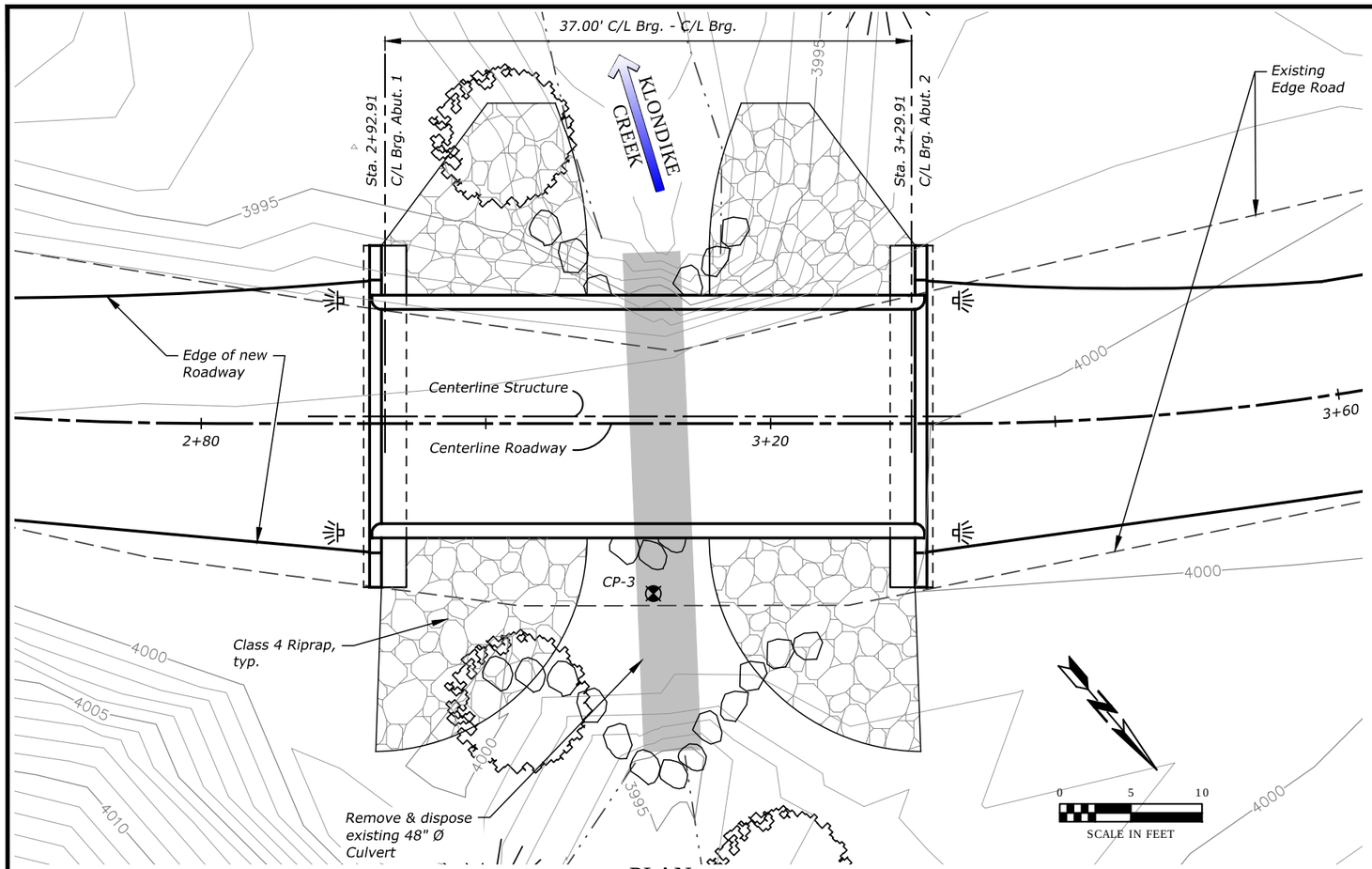

PLAN

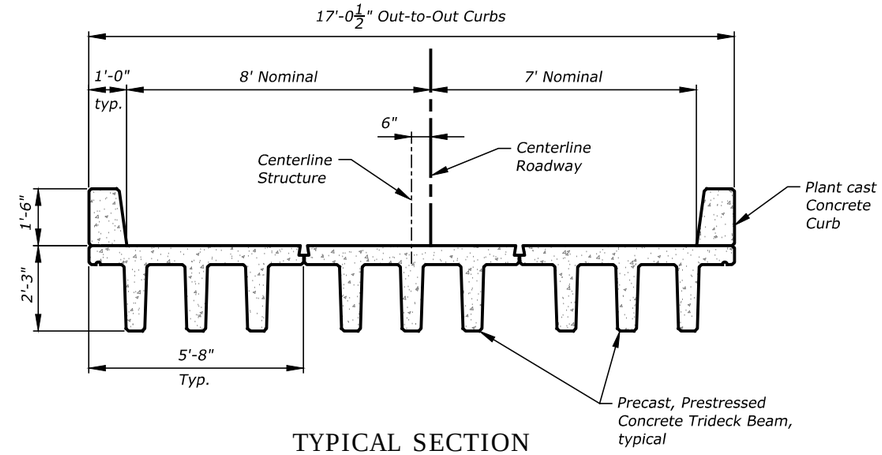

TYPICAL SECTION

Scale: 1/4" = 1'-0"

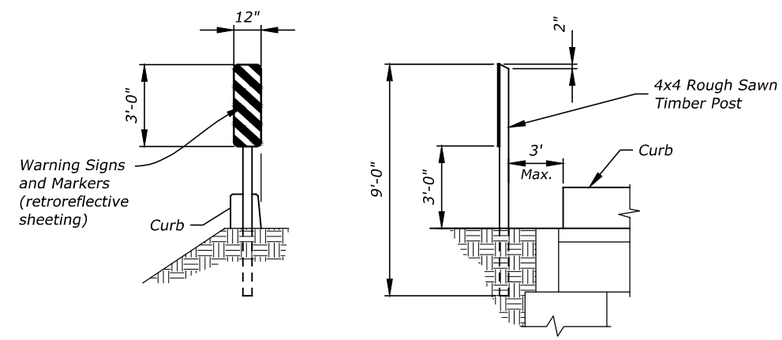

OBJECT MARKERS: Use 12"x 36" Type 3 object markers colored yellow and black. Use material meeting MUTCD OM-3L or OM-3R specifications. Fasten to post w/ (2) 1/4" Ø machine bolts w/ washers. Field drill bolt holes. Install posts such that the inside edge of the reflectorized panel is on line with the inside edge of the curb.

OBJECT MARKER TYPE 3

Not to Scale

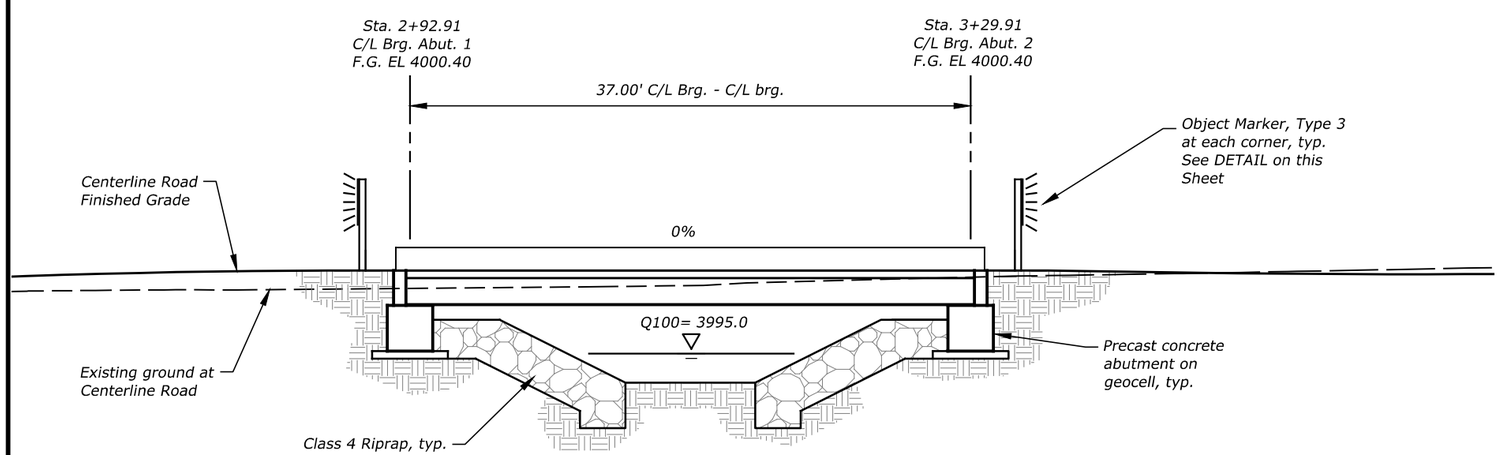

ELEVATION

HYDROLOGY AND HYDRAULICS: This structure is designed to pass a 100-year frequency flood of 86 cfs with a stage elevation at 3995.0 (Freeboard is 3.15' at upstream edge of bridge.)

HYDRAULIC DATA:
Drainage Area: 1.5 Sq. Mi.
Q2 = 21 cfs
Depth = 1.0'
Bankfull Width = 9'

Q100 = 86 cfs
Depth = 1.9'

U.S. DEPARTMENT OF AGRICULTURE
FOREST SERVICE
HELENA NATIONAL FOREST
HELENA, MT

KLONDIKE CREEK
CULVERT REPLACEMENT

BRIDGE GENERAL PLAN

DESIGNED:	M. Jensen	DATE	
DRAWN:	M. Jensen	DATE	
CHECKED:	C. Thompson	DATE	
REVIEWED:		DATE	

DATE	REVISION	BY

FILENAME:

SHEET 5

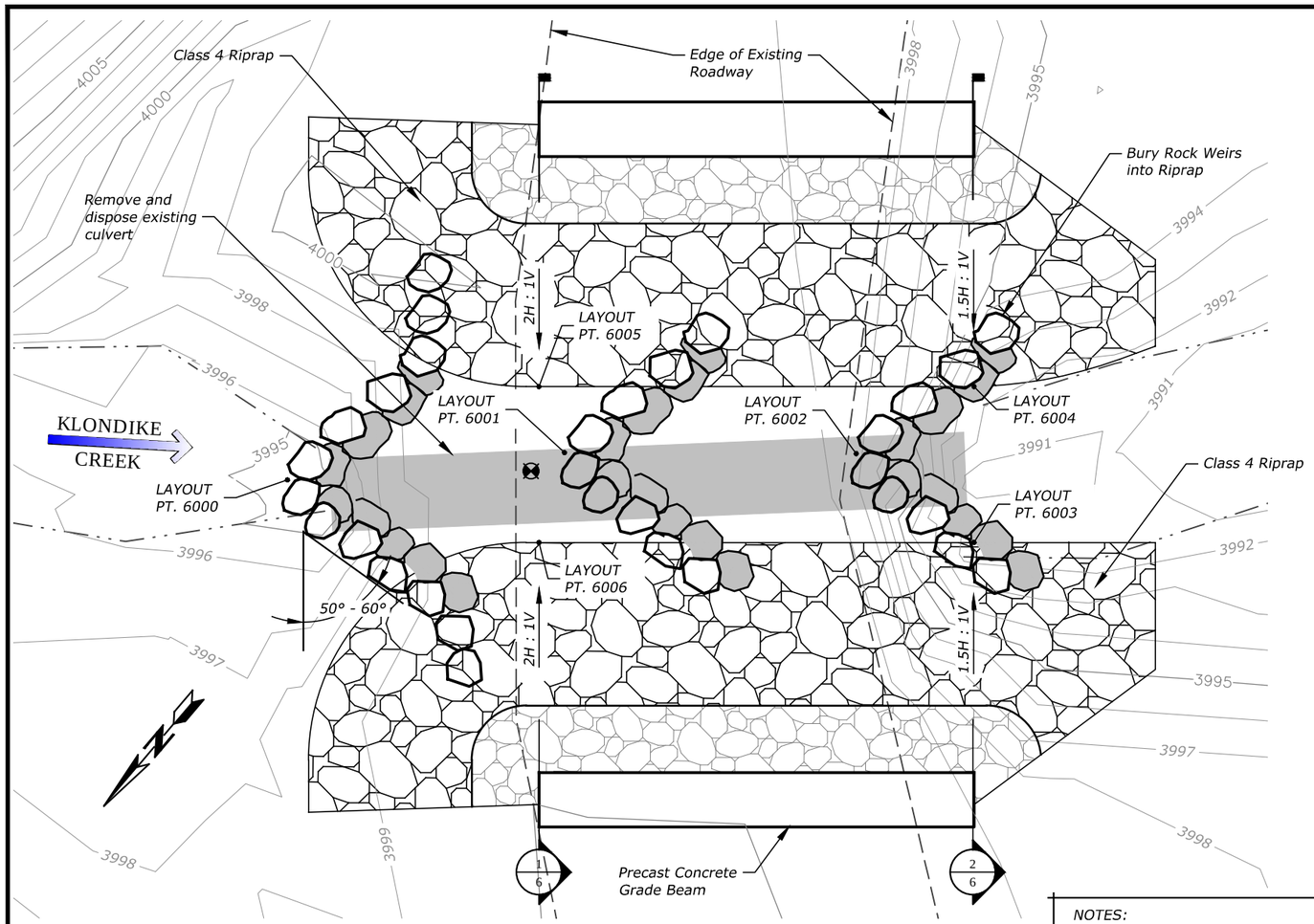

PLAN

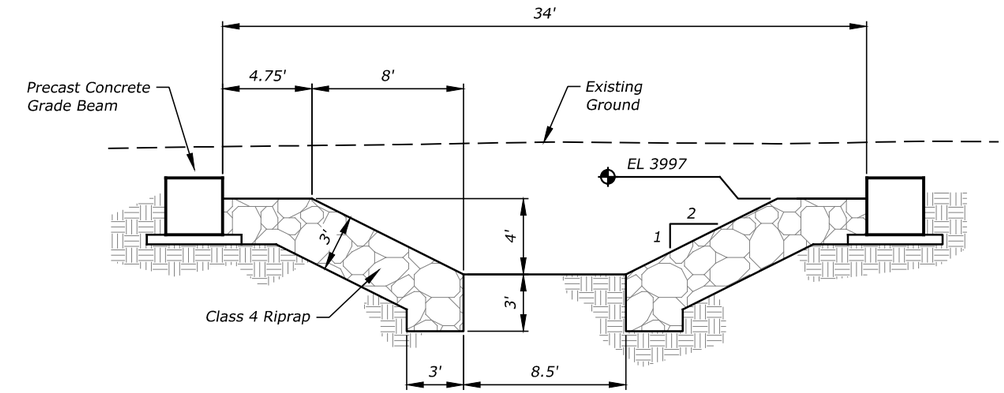

1/6 SECTION

Scale: 1/8" = 1'

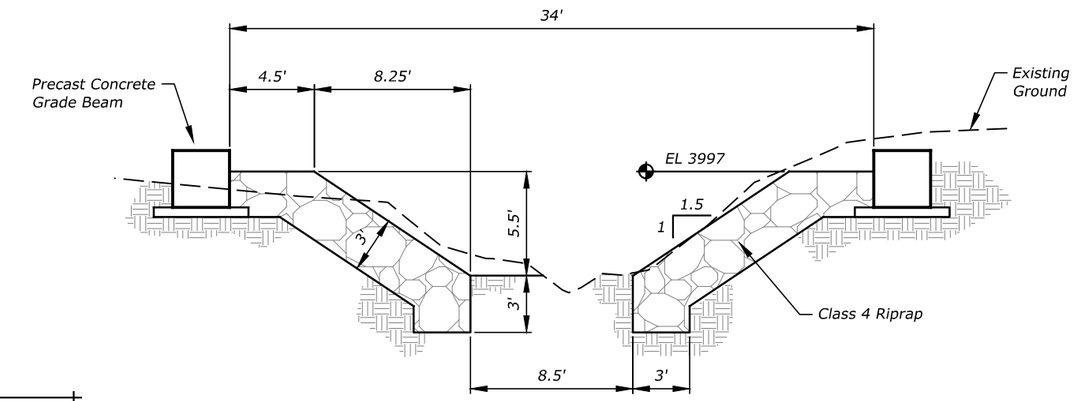

2/6 SECTION

Scale: 1/8" = 1'

NOTES:

1. See Sheet 3 for Layout Point Coordinate Table.
2. Excavation, hauling, and wasting material related to constructing the stream channel is Incidental to Item 20806

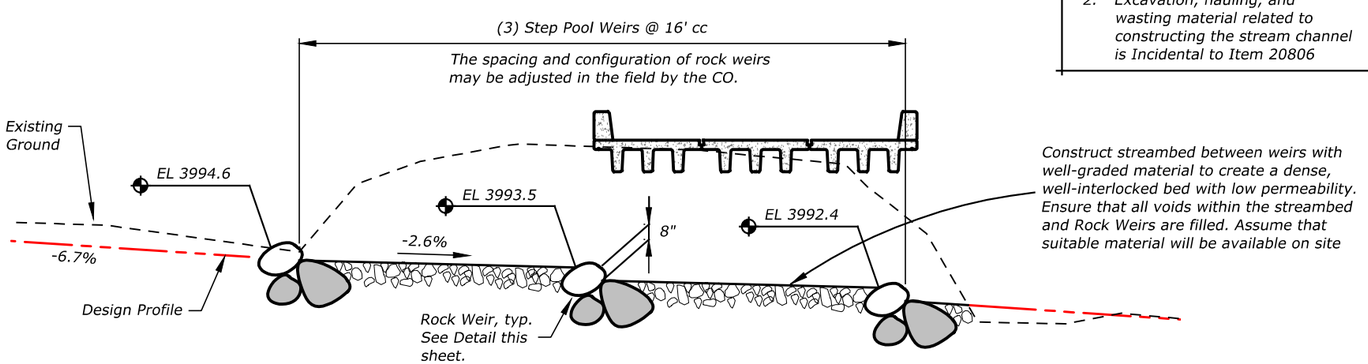

PROFILE

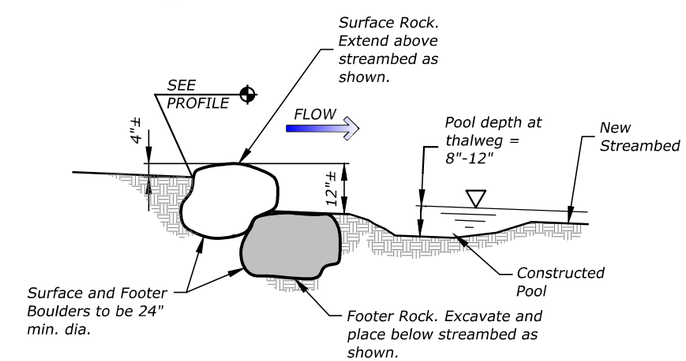

ROCK WEIR DETAIL

Not to Scale

U.S. DEPARTMENT OF AGRICULTURE
FOREST SERVICE
HELENA NATIONAL FOREST
HELENA, MT

KLONDIKE CREEK
CULVERT REPLACEMENT

STREAM DETAILS

DESIGNED:	M. Jensen	DATE	
DRAWN:	M. Jensen	DATE	
CHECKED:	C. Thompson	DATE	
REVIEWED:		DATE	

DATE	REVISION	BY

FILENAME:

SHEET 6

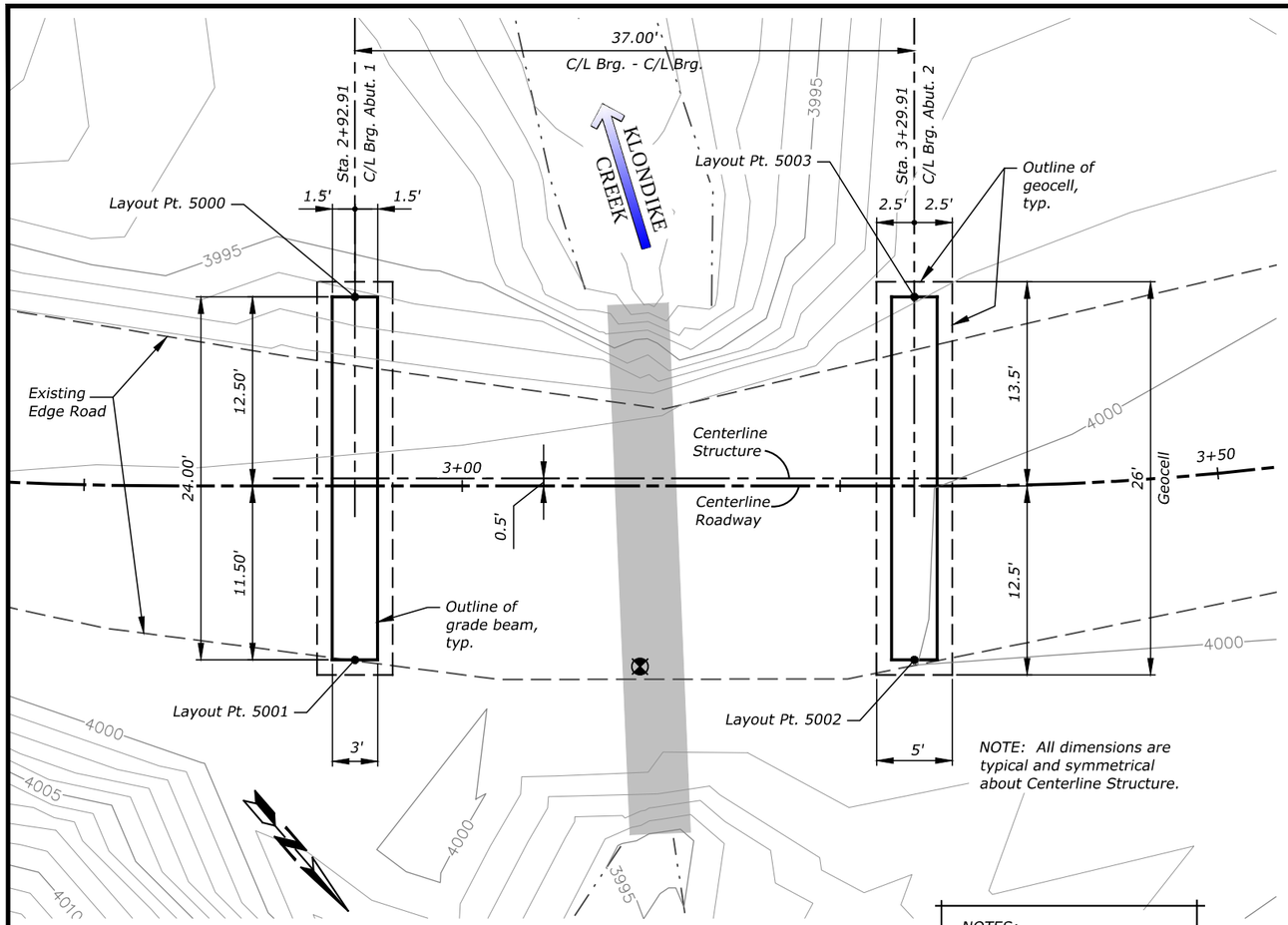

FOUNDATION PLAN

NOTES:
1. See Sheet 3 for Layout Point Coordinate Table.

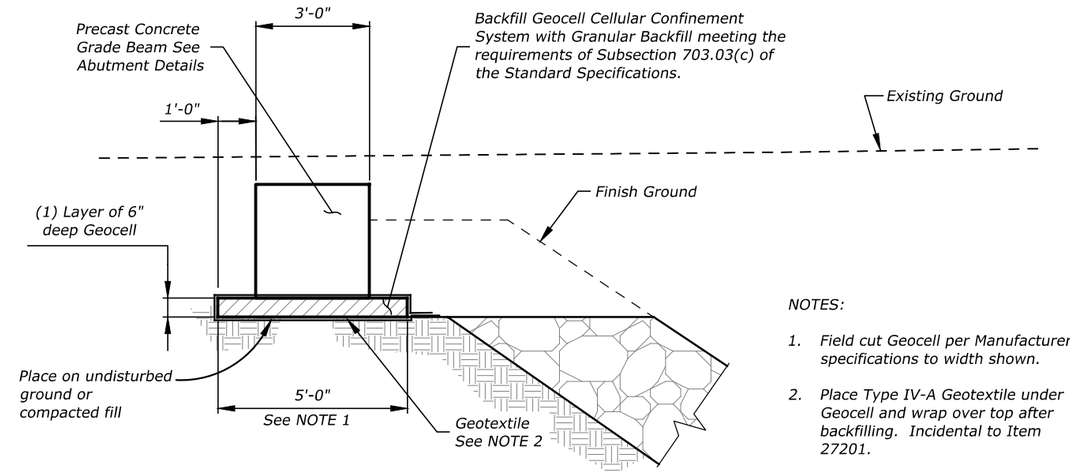

TYPICAL SECTION

Scale: 1/4" = 1'

NOTES:

1. Field cut Geocell per Manufacturer's specifications to width shown.
2. Place Type IV-A Geotextile under Geocell and wrap over top after backfilling. Incidental to Item 27201.

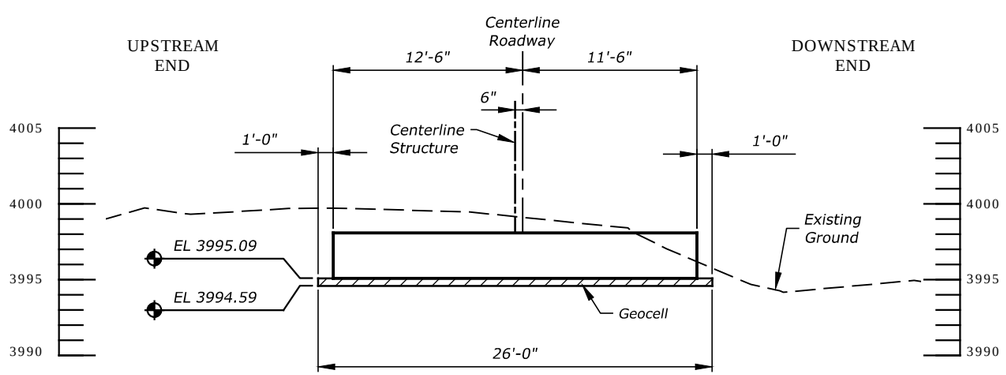

SECTION ALONG C/L BEARING:
ABUTMENT NO. 1

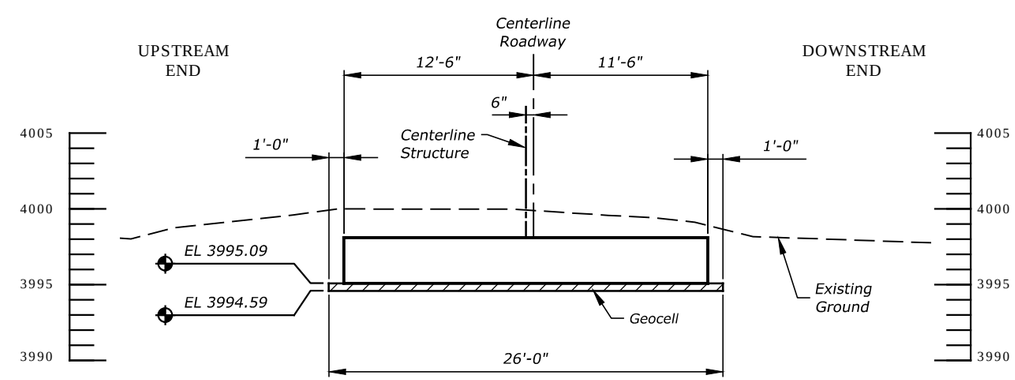

SECTION ALONG C/L BEARING:
ABUTMENT NO. 2

U.S. DEPARTMENT OF AGRICULTURE
FOREST SERVICE
HELENA NATIONAL FOREST
HELENA, MT

KLONDIKE CREEK
CULVERT REPLACEMENT

FOUNDATION PLAN
AND DETAILS

DESIGNED:	M. Jensen	DATE	
DRAWN:	M. Jensen	DATE	
CHECKED:	C. Thompson	DATE	
REVIEWED:		DATE	

DATE	REVISION	BY

FILENAME:

SHEET 7

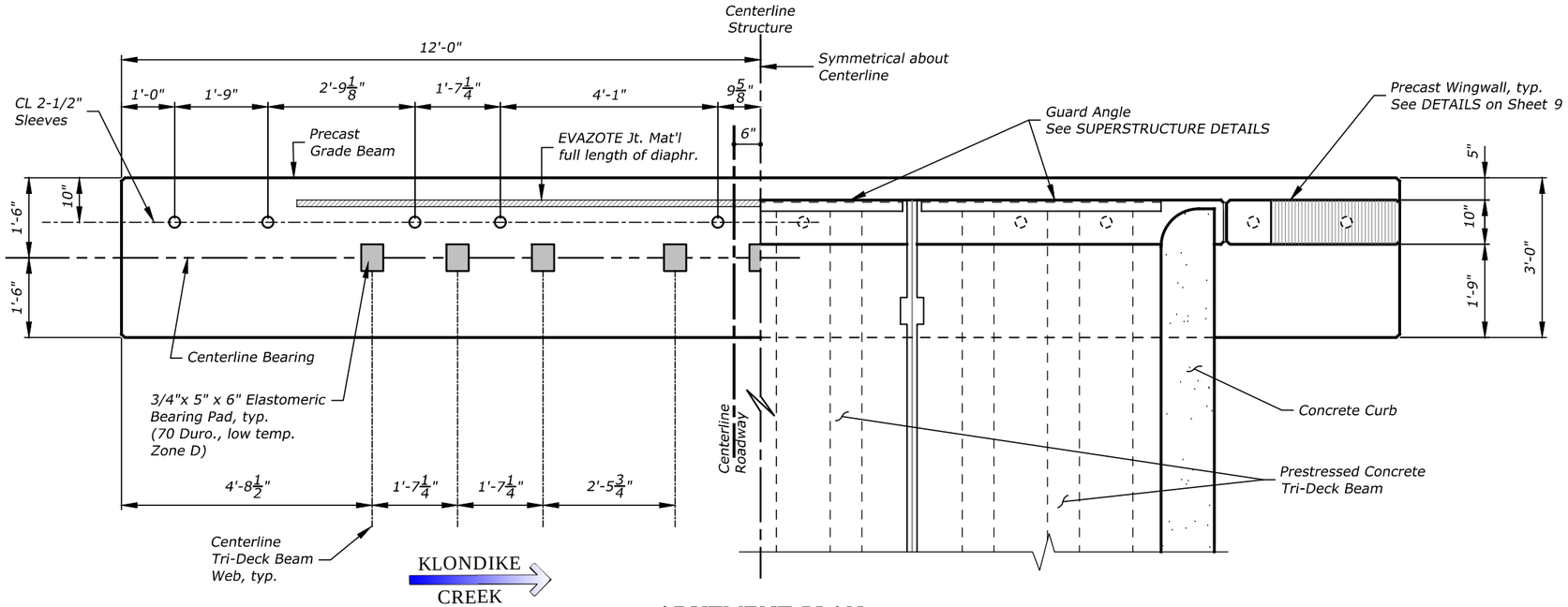

ABUTMENT PLAN

Scale: 3/8" = 1'-0"

ABUTMENT 1 SHOWN
ABUTMENT 2 SIMILAR

NOTE: PRECAST GRADE BEAMS AND WINGWALLS MUST BE CAST AND SUPPLIED BY THE SAME MANUFACTURER THAT FABRICATES THE PRESTRESSED BEAMS.

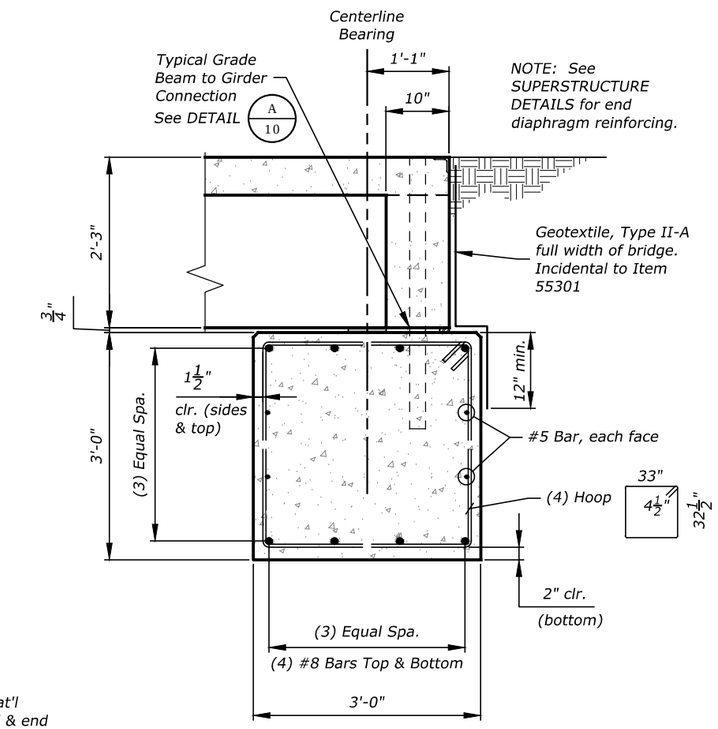

1/8 SECTION

Scale: 1/2" = 1'-0"

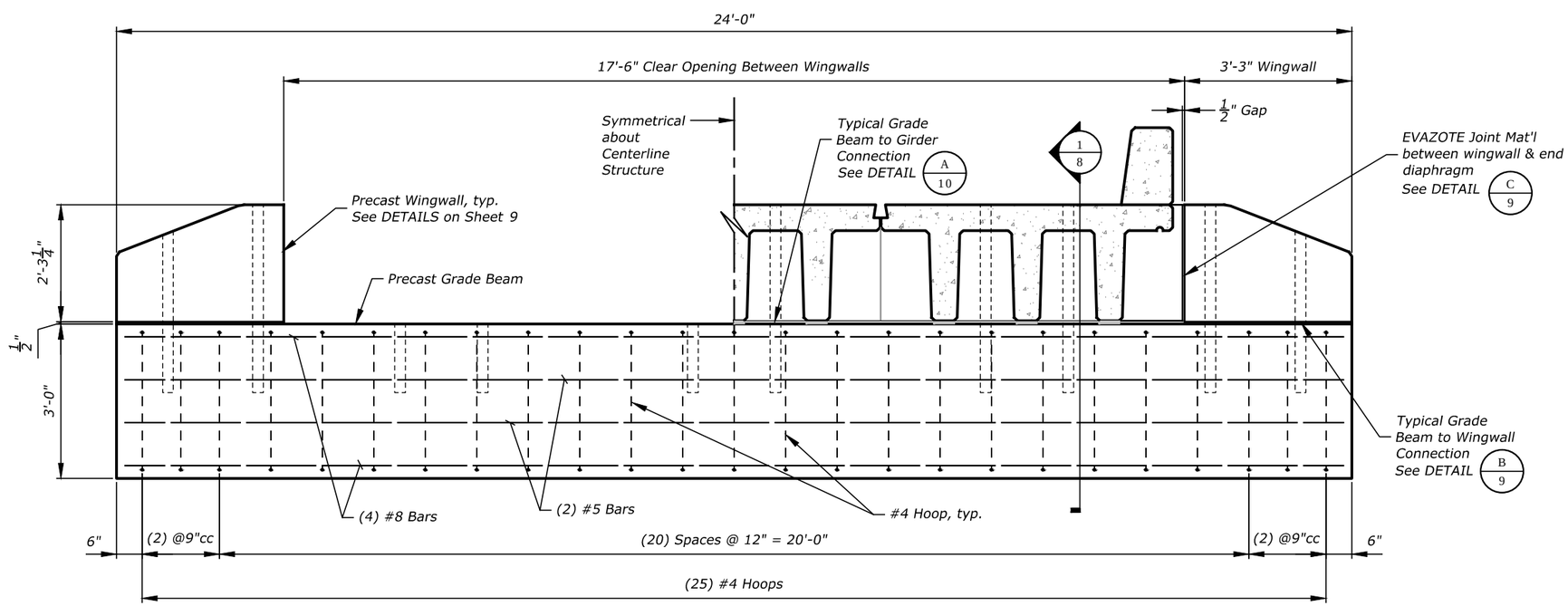

ABUTMENT ELEVATION

Scale: 3/8" = 1'-0"

LOOKING BACK ON-LINE
ABUTMENT 1 SHOWN, ABUTMENT 2 SIMILAR

U.S. DEPARTMENT OF AGRICULTURE
FOREST SERVICE
HELENA NATIONAL FOREST
HELENA, MT

KLONDIKE CREEK CULVERT REPLACEMENT

ABUTMENT PLAN AND DETAILS

DESIGNED:	M. Jensen	DATE	
DRAWN:	M. Jensen	DATE	
CHECKED:	C. Thompson	DATE	
REVIEWED:		DATE	

DATE	REVISION	BY

FILENAME:

SHEET 8

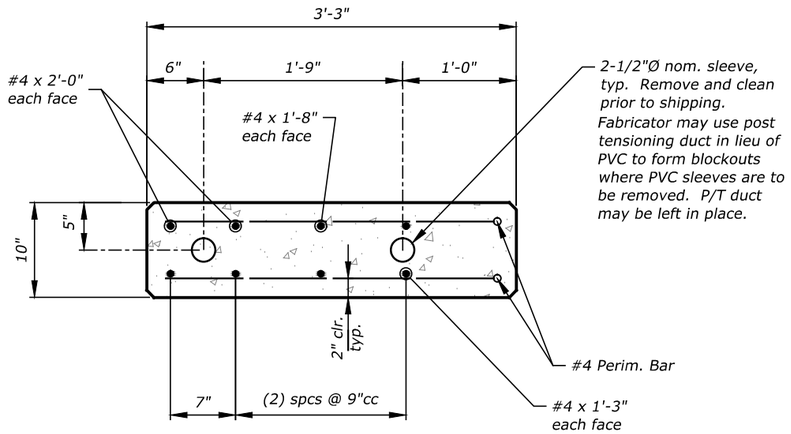

SECTION E - E

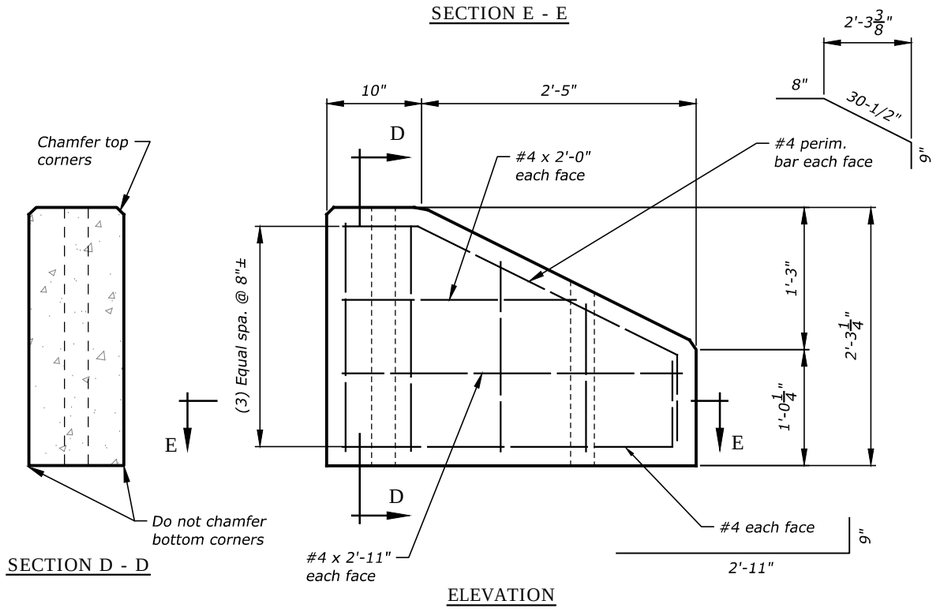

SECTION D - D

ELEVATION

TYPICAL WINGWALL DETAIL

Scale: 3/4" = 1'-0"

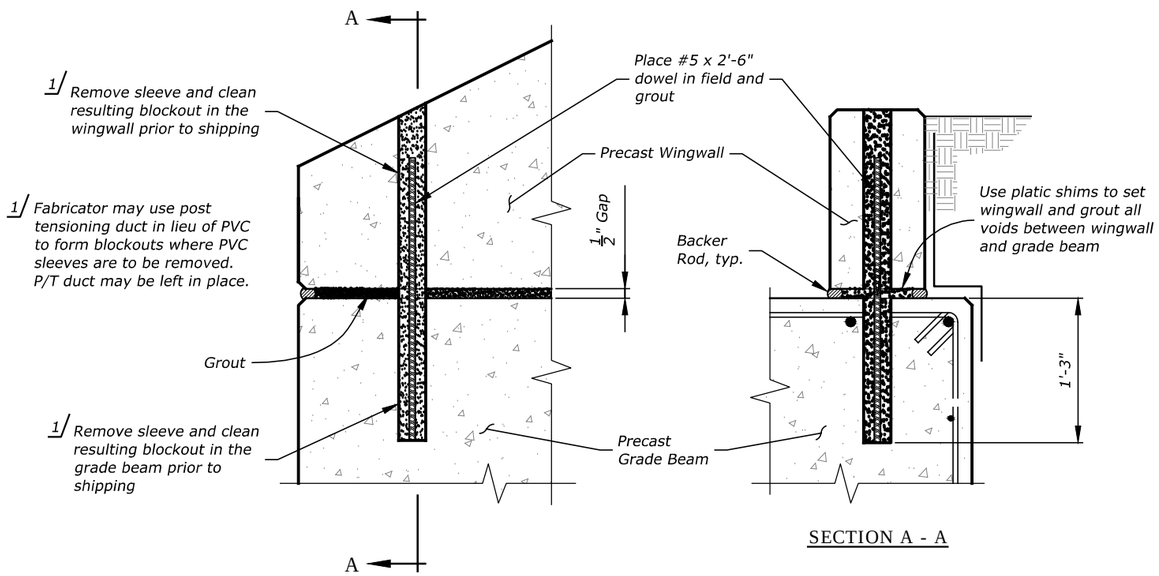

SECTION A - A

B/9 DETAIL

Scale: 3/4" = 1'-0"

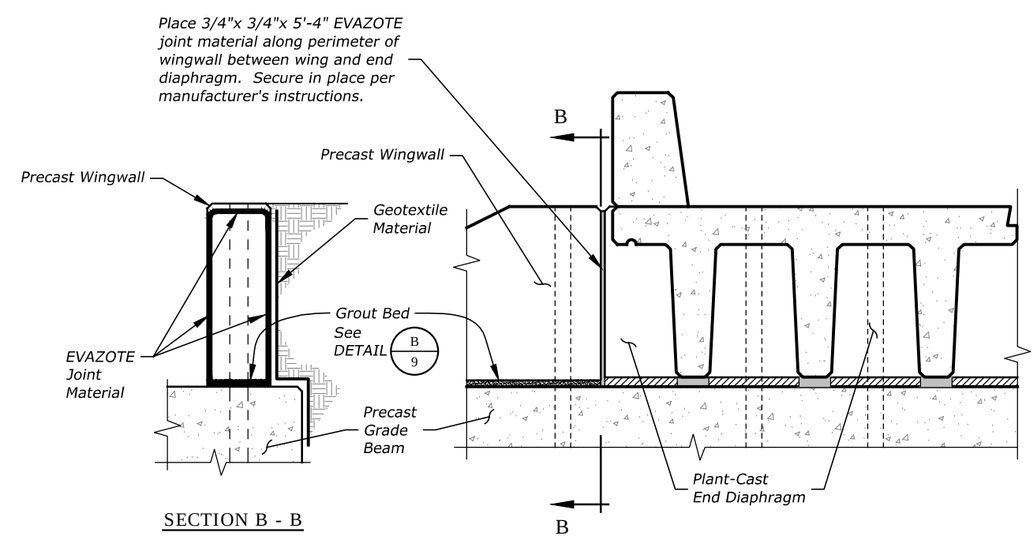

SECTION B - B

C/9 DETAIL

Scale: 1/2" = 1'-0"

U.S. DEPARTMENT OF AGRICULTURE
FOREST SERVICE
HELENA NATIONAL FOREST
HELENA, MT

KLONDIKE CREEK
CULVERT REPLACEMENT

WINGWALL DETAILS

DESIGNED:	M. Jensen	DATE	
DRAWN:	M. Jensen	DATE	
CHECKED:	C. Thompson	DATE	
REVIEWED:		DATE	

DATE	REVISION	BY

FILENAME:

SHEET 9

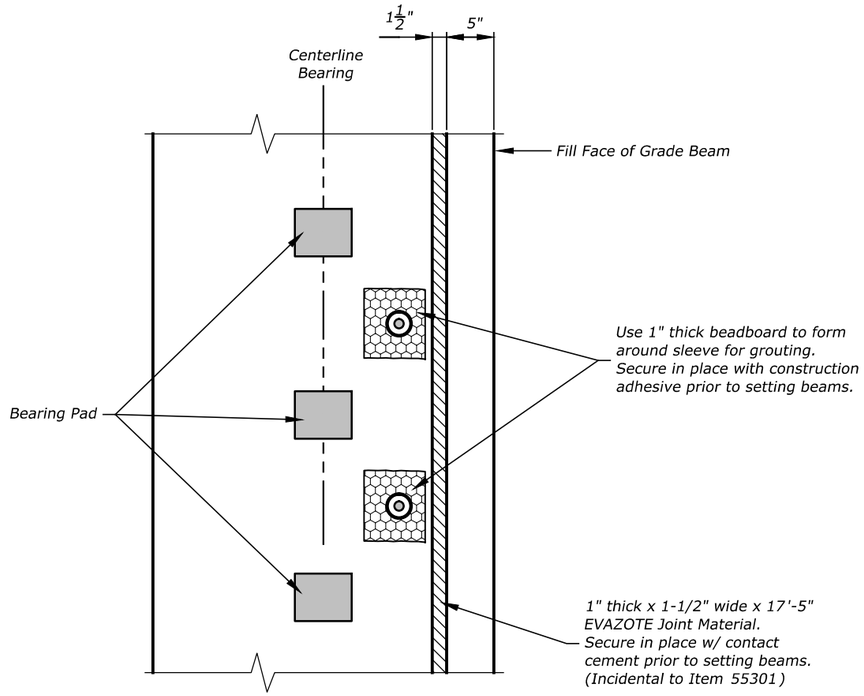

SECTION C - C

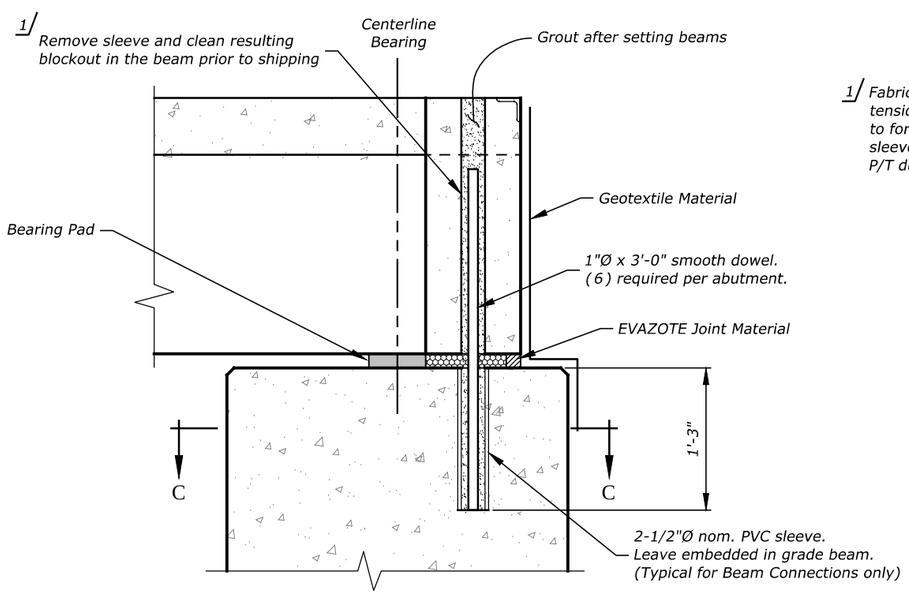

1/ Fabricator may use post tensioning duct in lieu of PVC to form blockouts where PVC sleeves are to be removed. P/T duct may be left in place.

A / 10 **DETAIL**

Scale: 3/4" = 1'-0"

U.S. DEPARTMENT OF AGRICULTURE
FOREST SERVICE
HELENA NATIONAL FOREST
HELENA, MT

KLONDIKE CREEK CULVERT REPLACEMENT

ABUTMENT CONNECTION DETAILS

DESIGNED:	M. Jensen	DATE	
DRAWN:	M. Jensen	DATE	
CHECKED:	C. Thompson	DATE	
REVIEWED:		DATE	

DATE	REVISION	BY

FILENAME:

SHEET 10

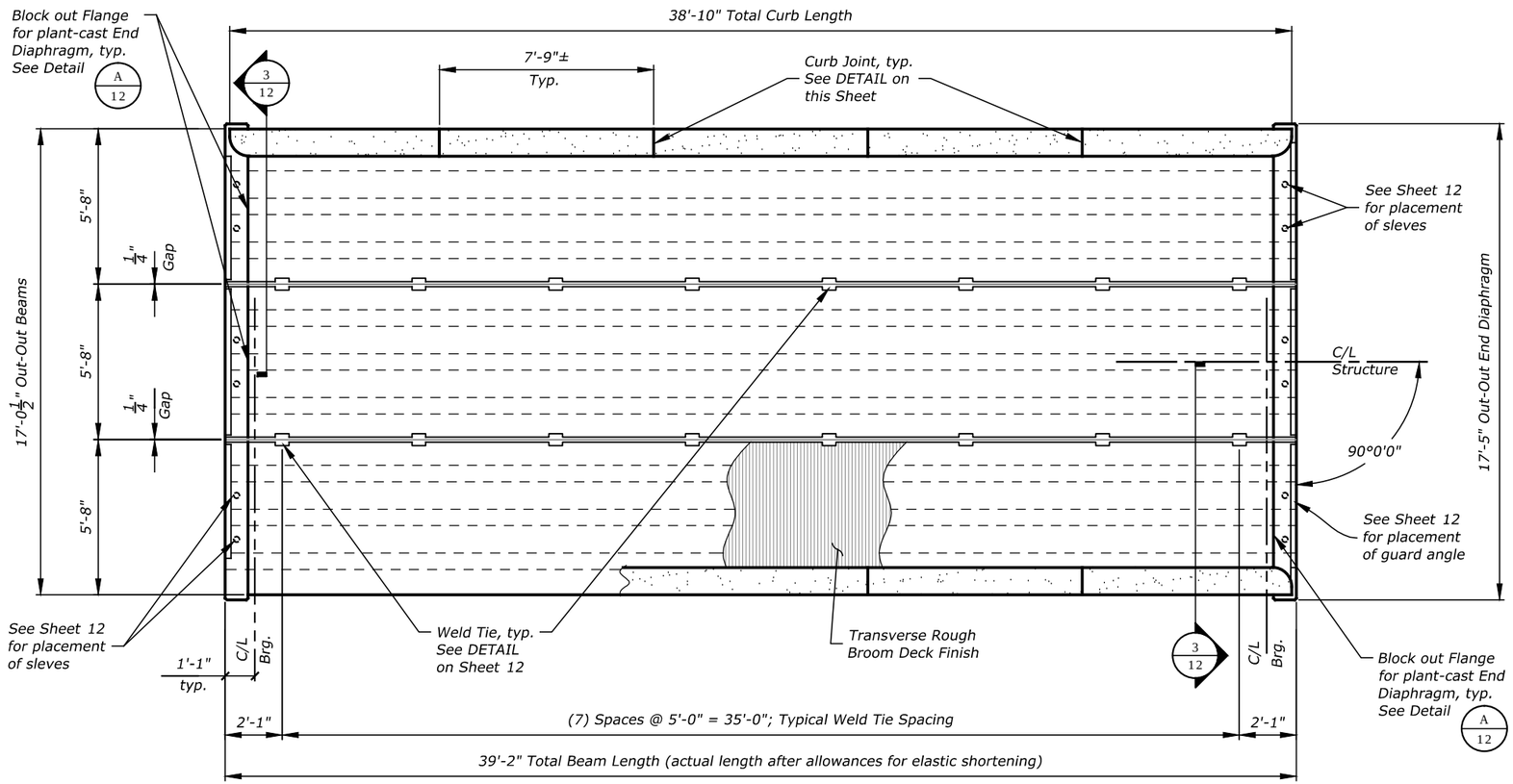

SUPERSTRUCTURE PLAN

Scale: 3/16" = 1'-0"

PRESTRESSED BEAM NOTES

Pretensioning is the only acceptable method of prestressing for this project.

Provide the final design for all prestressed reinforcement and non-prestressed reinforcement in the section shown on this sheet. Verify that the allowable stress and ultimate strength requirements are met at all stages of construction. Assume moderate corrosive conditions for tensile stress limits at Service Limit State after losses.The design documents must bear the seal of a Professional Engineer licensed in Montana. Submit calculations and shop drawings in accordance with Section 553 of the Standard Specifications at least 30 days prior to casting any members. See GENERAL NOTES on Sheet 2 for additional design and material specifications.

Design in accordance with the AASHTO LRFD Bridge Design Specifications, 5th Edition, 2010 with current interims. Design notes are as follows:

1. *HL-93 Live Load with Impact*
2. *Superimposed dead load is 35 PSF for a future wearing surface. Superimposed dead load may be assumed to be equally distributed to all three beams.*

FINISHING CONCRETE: Finish the bottoms of all beams and the exterior face of all exterior beams in accordance with the specifications except a concrete gray epoxy mortar using AASHTO M235 Class II Epoxy Resin Adhesive may be used instead of the specified sand-cement mortar to reduce curing time. Rub the epoxy mortar with cement prior to hardening. Finish the beam ends so that all holes or acceptable rock pockets are patched and the strands are cut off flush or burned back.

PAINTING OF WELD TIE CONNECTIONS AND GUARD ANGLES: Galvanize or paint guard angles or weld ties not covered by 1 inch or more of concrete. If painting, use one primer coat and two field coats of aluminum paint conforming to AASHTO M69, Type II.

ALTERNATE SUPERSTRUCTURE SECTION: An alternate section of precast, prestressed concrete only may be proposed. The alternate section must provide the minimum clear opening between curb shown on Sheet 5 but may deviate up to 3" maximum in overall depth. Maintain the finished grade elevations and make any elevation adjustments to the grade beam elevations. The Contractor is responsible for revisions required to the details shown in these drawings. Submit all revisions with the shop drawings and design calculations.

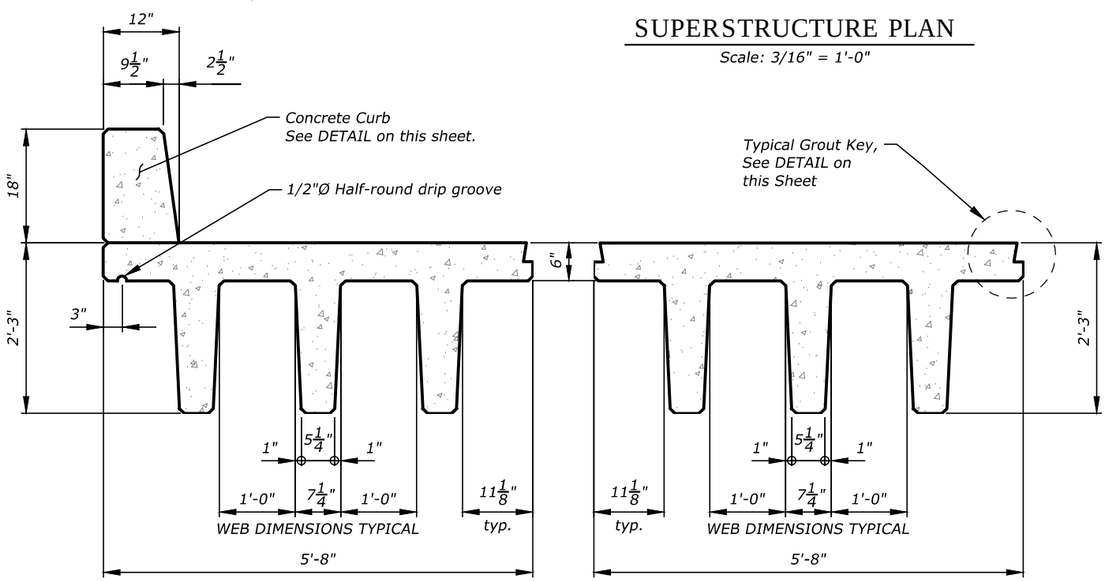

EXTERIOR BEAM

Scale: 1/2" = 1'-0"

INTERIOR BEAM

Scale: 1/2" = 1'-0"

NOTE: Beam fabricator may submit alternate grout key detail for approval.

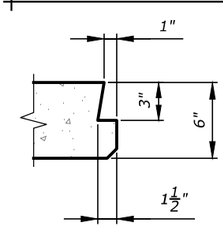

GROUT KEY

Not to Scale

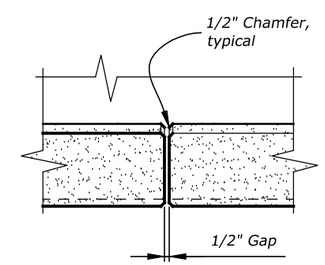

PLAN VIEW

CURB JOINT

Not to Scale

NOTE: Curb to be Plant Cast following release of prestressing.

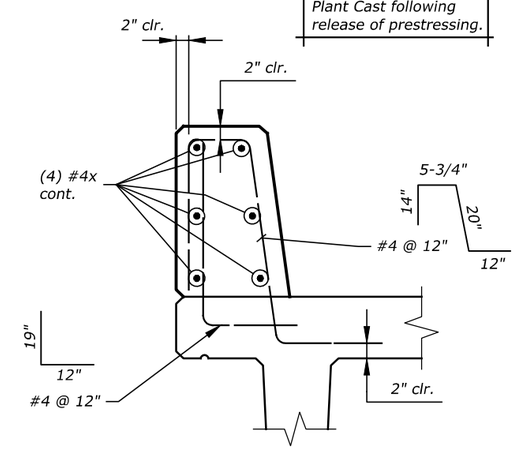

CURB REINFORCING

Not to Scale

U.S. DEPARTMENT OF AGRICULTURE
FOREST SERVICE
HELENA NATIONAL FOREST
HELENA, MT

KLONDIKE CREEK
CULVERT REPLACEMENT

SUPERSTRUCTURE PLAN
AND DETAILS

DESIGNED:	M. Jensen	DATE	
DRAWN:	M. Jensen	DATE	
CHECKED:	C. Thompson	DATE	
REVIEWED:		DATE	

DATE	REVISION	BY

FILENAME:

SHEET 11

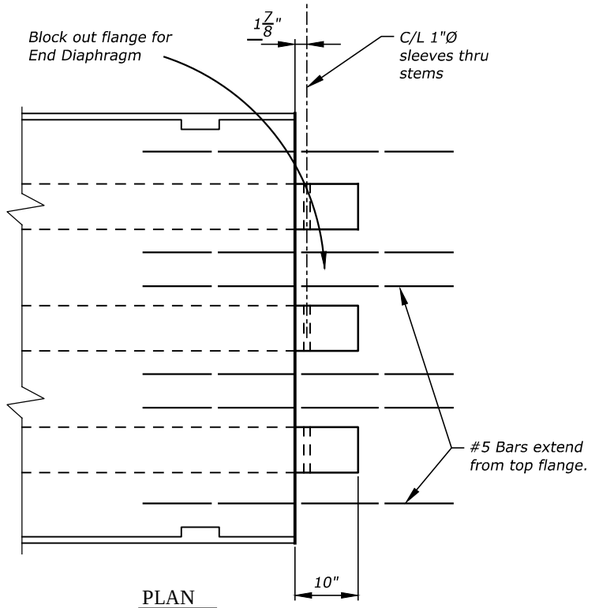

PLAN

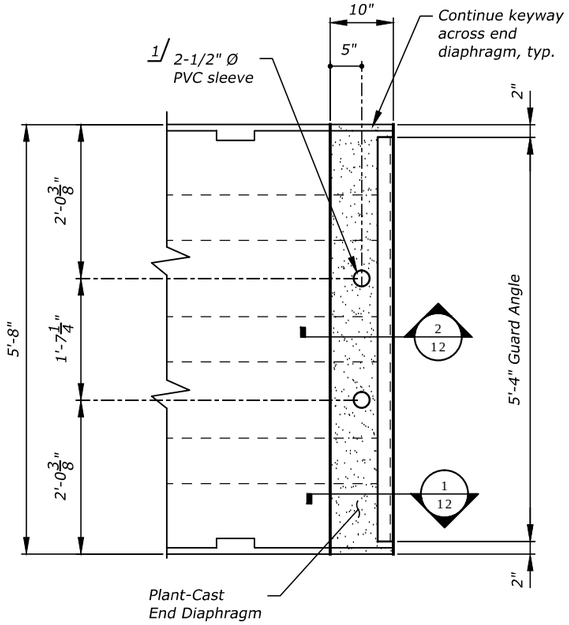

INTERIOR BEAM PLAN

Not to Scale

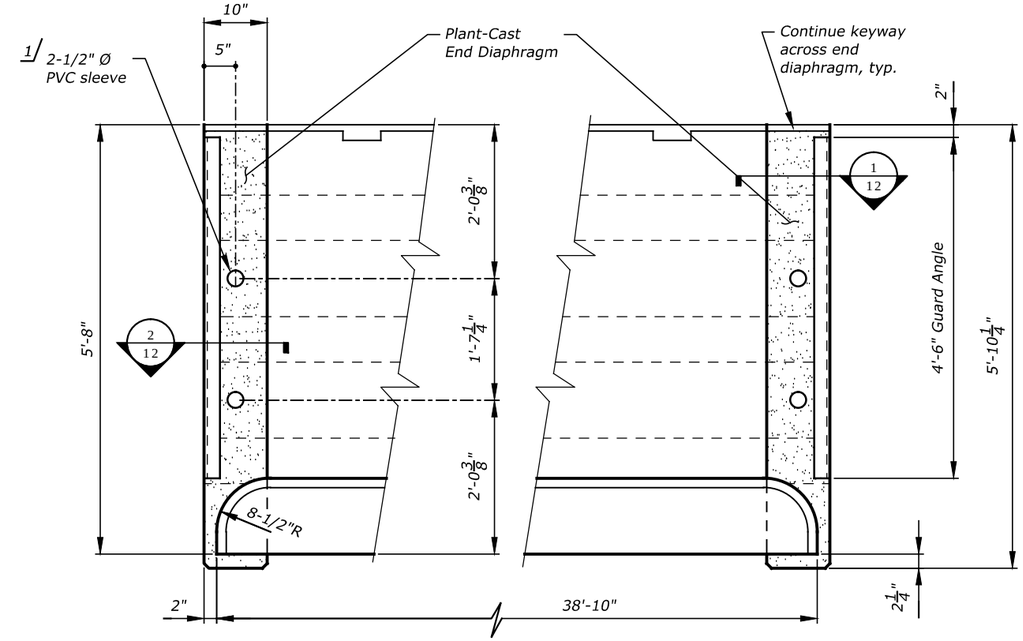

EXTERIOR BEAM PLAN

Not to Scale

1/ Remove sleeve and clean resulting blockout prior to shipping beam. Fabricator may use post tensioning duct in lieu of PVC to form blockouts where PVC sleeves are to be removed. P/T duct may be left in place.

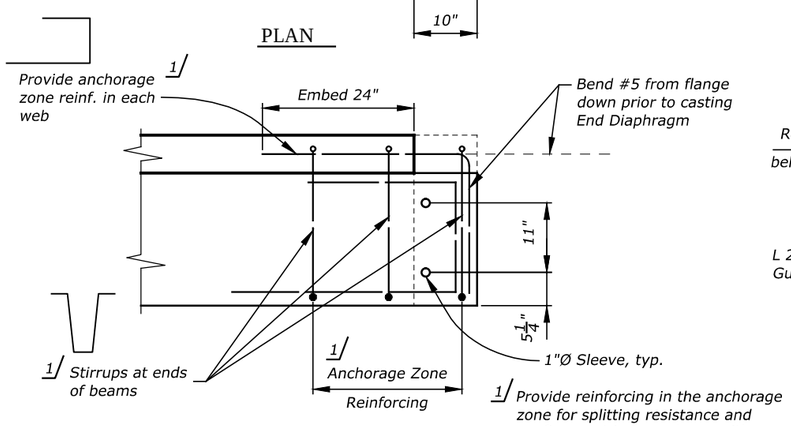

A/12 DETAIL

Scale: 1/2" = 1'-0"

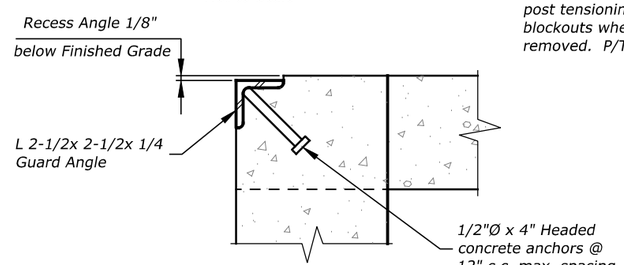

1/12 SECTION

Not to Scale

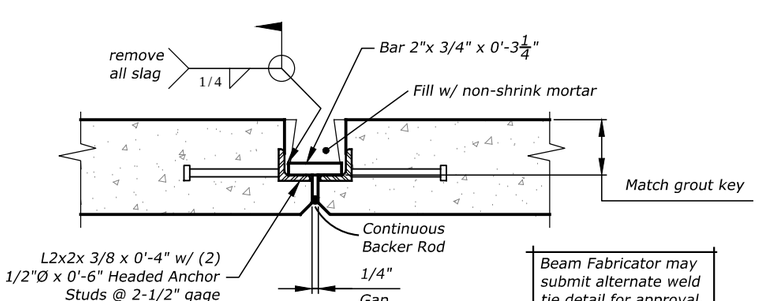

Beam Fabricator may submit alternate weld tie detail for approval.

WELD TIE DETAIL

Not to Scale

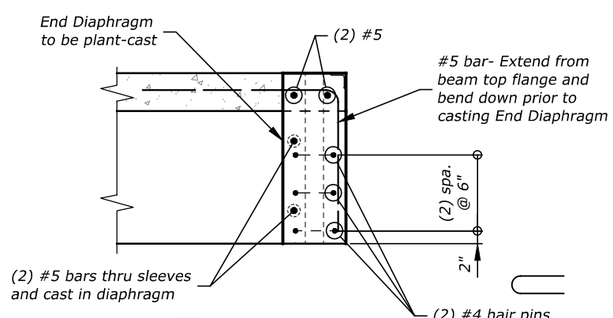

2/12 SECTION

Scale: 1/2" = 1'

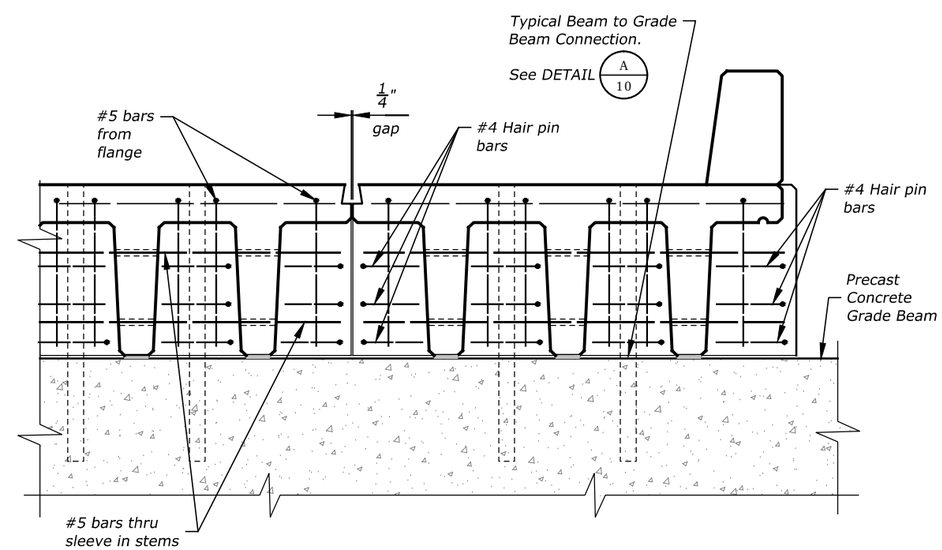

3/12 SECTION

Scale: 1/2" = 1'

U.S. DEPARTMENT OF AGRICULTURE
FOREST SERVICE
HELENA NATIONAL FOREST
HELENA, MT

KLONDIKE CREEK
CULVERT REPLACEMENT

SUPERSTRUCTURE DETAILS

DESIGNED:	M. Jensen	DATE	
DRAWN:	M. Jensen	DATE	
CHECKED:	C. Thompson	DATE	
REVIEWED:		DATE	

DATE	REVISION	BY

FILENAME:

SHEET 12

KONDIKE CREEK CULVERT

ROAD CROSS SECTIONS

PREPARED BY : DJ&A, P.C.
CONSULTING ENGINEERS & LAND SURVEYORS
3203 Russell Street, Missoula, Montana 59801-2591
Phone 406/721-4320 Fax 406/549-4371

SHEET XS1 OF XS2

2+60.00

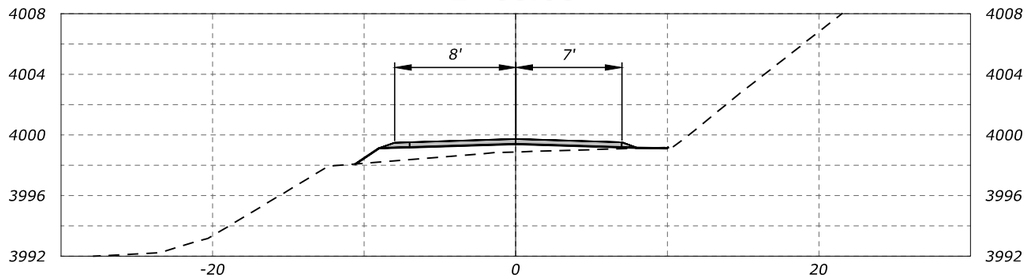

2+31.34

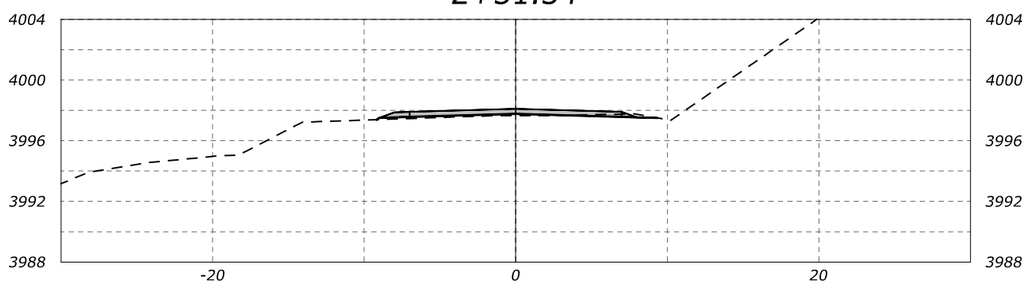

2+20.00

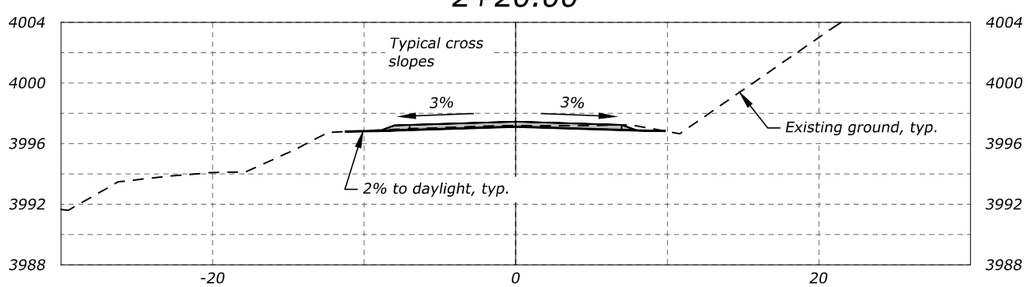

2+00.00

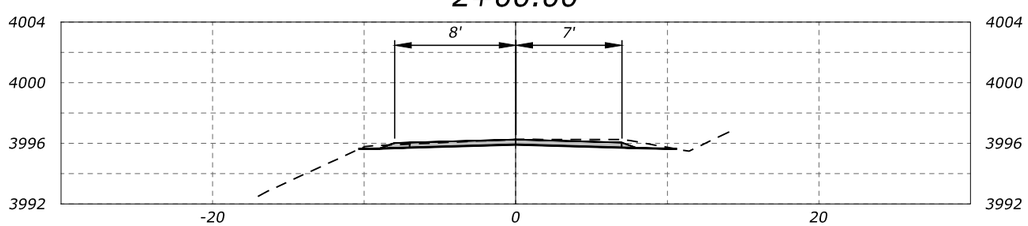

3+32.71

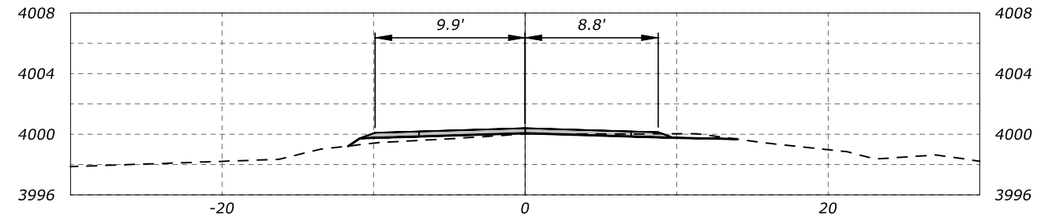

3+30.99

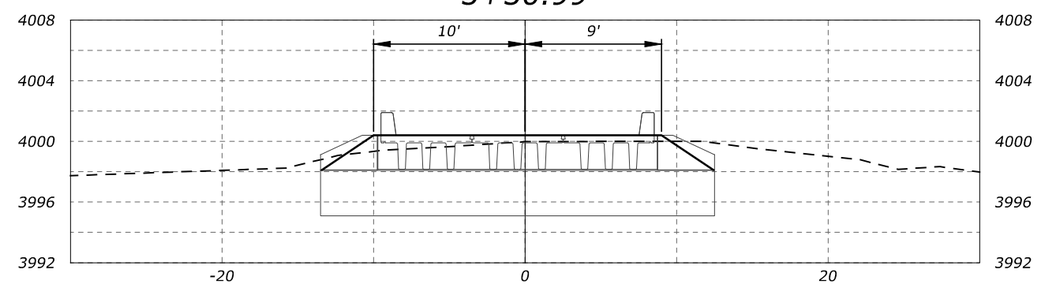

2+91.82

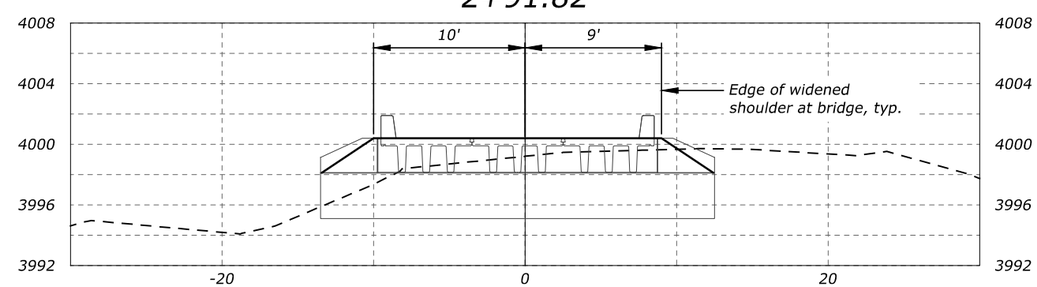

2+81.25

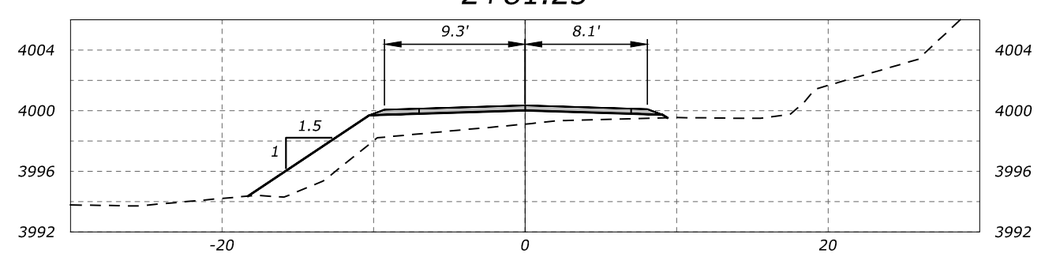

KONDIKE CREEK CULVERT

ROAD CROSS SECTIONS

PREPARED BY : DJ&A, P.C.
CONSULTING ENGINEERS & LAND SURVEYORS
3203 Russell Street, Missoula, Montana 59801-6591
Phone 406/721-4320 Fax 406/549-6371

4+00.00

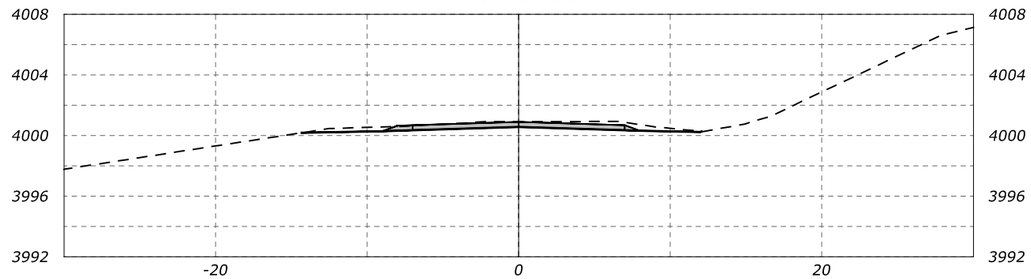

3+85.19

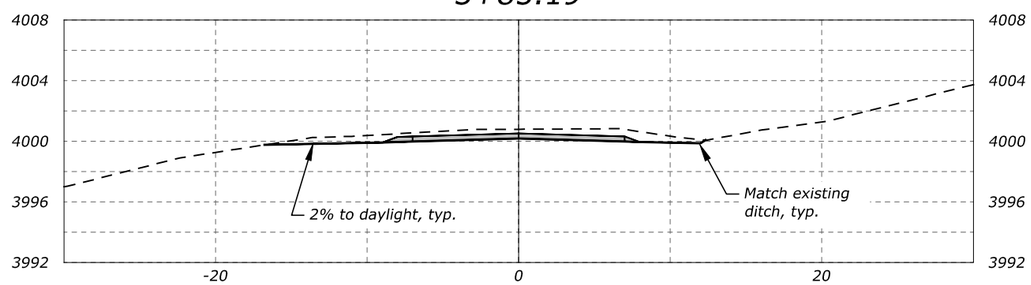

3+60.00

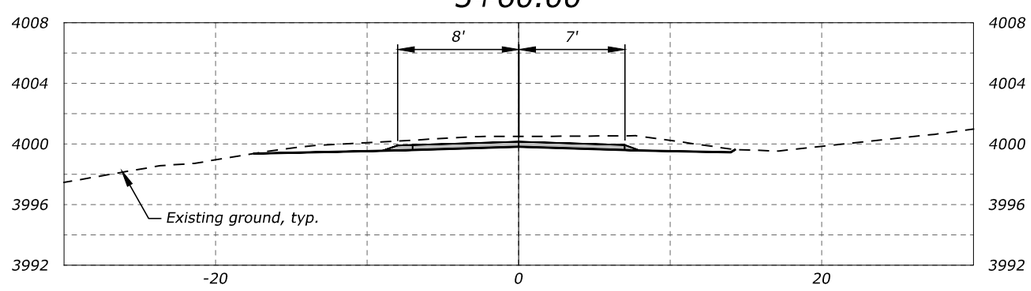

4+40.00

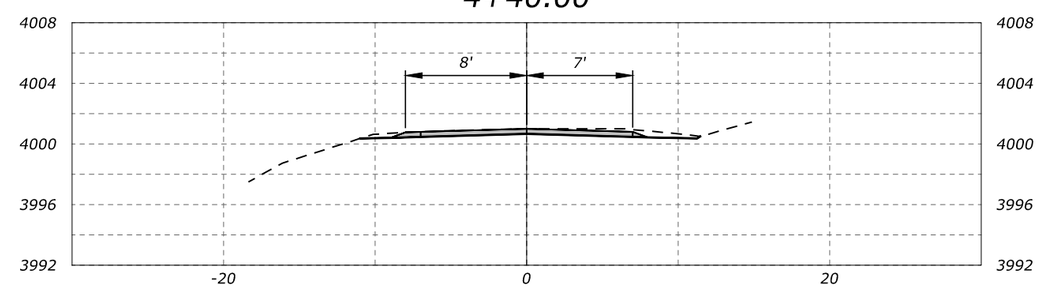

3+40.00

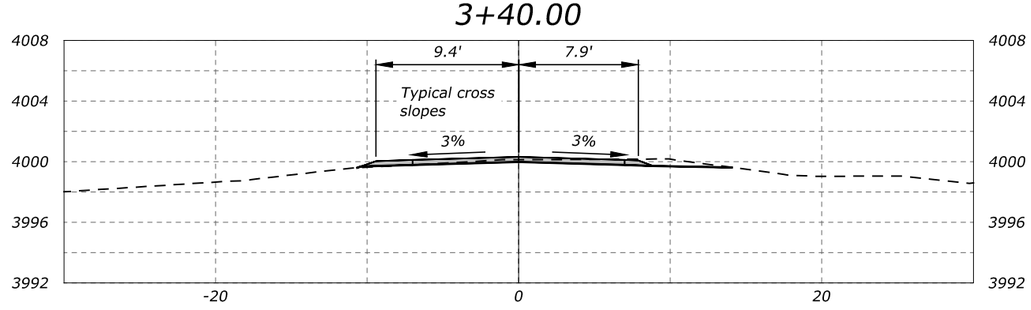
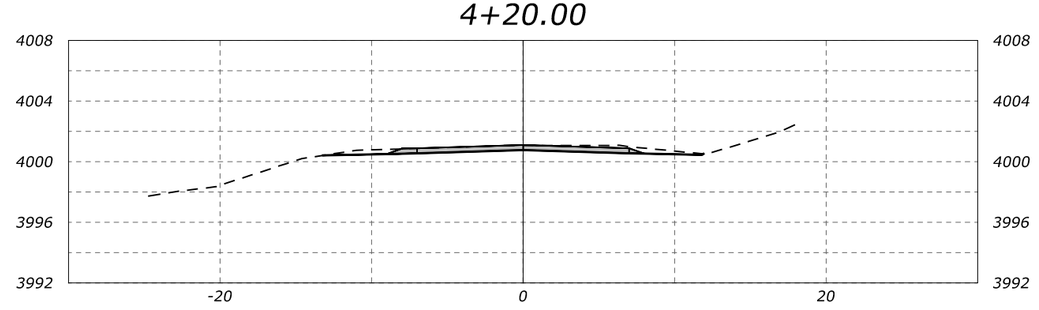
4+20.00