Addendum No. 1

To:	All Bidders of Record
Project:	Upper Swamp Creek Fencing
MFWP Project #:	FWP #13-04
Date:	October 18 2012
From:	MT Fish, Wildlife & Parks, Paul Valle, Project Manager

Acknowledge receipt of this addendum by inserting its number and date in the Proposal Form and on the Bid Envelope. Failure to do so may subject bidder to disqualification.

This Addendum forms a part of the Contract Documents. Additions, Clarifications and/or modifications are as follows:

Clarifications and General Modifications

CLARIFICATIONS

1. There will be no cables required on the metal gates.

Modifications

1. Please use the attached detail that shows the jacks located every 10 feet on jackleg and five wire fence detail. Delete the detail on page 122 of the original bid set.
2. Sloped creek crossings have been added to the project one, one sided crossing at the far West end of the fence line and one crossing in the center of the fence line with both banks sloped. See attached detail.

2. Please use the attached new proposal form for bidding showing the added crossings.

End of Addendum

JACKLEG FIVE WIRE FENCE DETAIL

(NO SCALE)

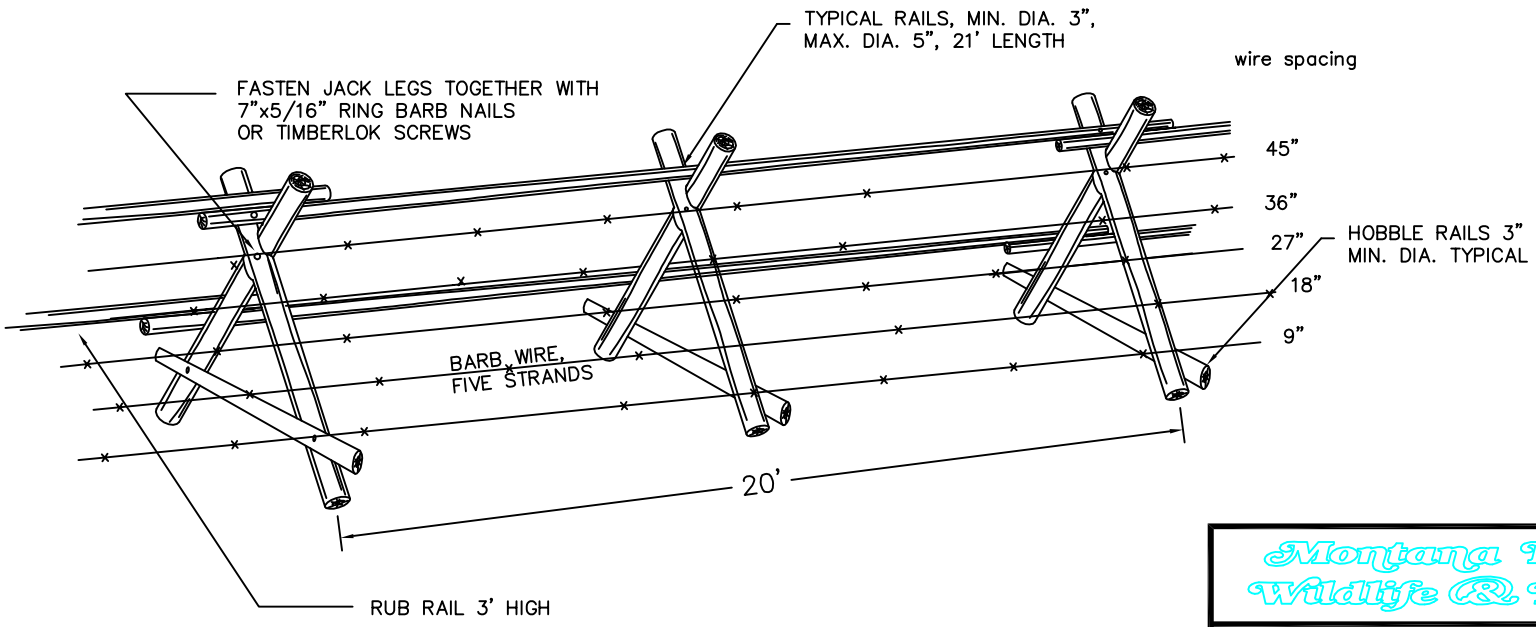

Montana Fish, Wildlife & Parks

TITLE:

SHEET:

FILE NAME:

DRAWN BY: **DATE:**

ERROR: syntaxerror
OFFENDING COMMAND: --nostringval--

STACK:

/Title
()
/Subject
(D:20121017155757-06’00’)
/ModDate
()
/Keywords
(PDFCreator Version 0.9.5)
/Creator
(D:20121017155757-06’00’)
/CreationDate
(cf9792)
/Author
-mark-

Upper Swamp Creek Stream X-ings

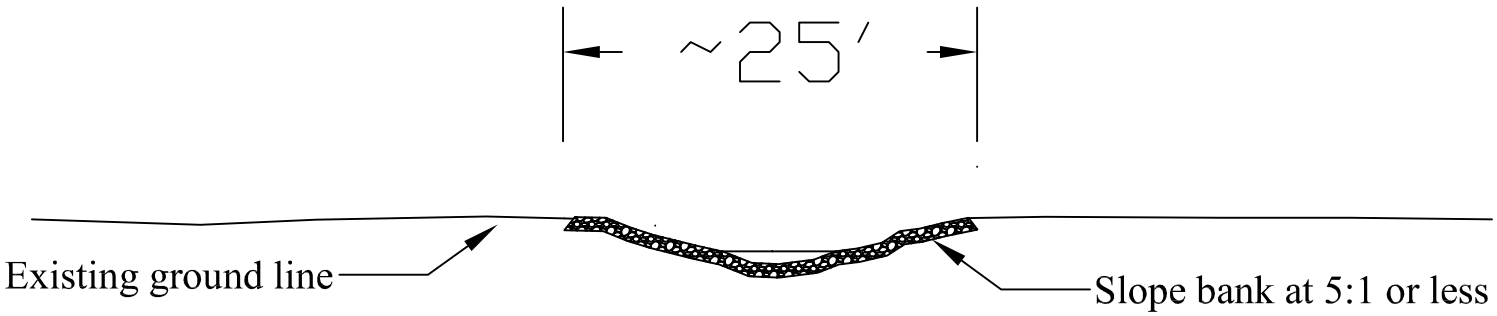

Side view

NOTES:

1. Bid Item for gravel crossing includes bank sloping where required, and 6" of gravel from landowner pit.

P Valle Oct 2012 DRAWN BY: DATE: CHECKED BY: DATE:	REVISED BY: DATE: APPROVED BY: DATE:	APPROVED BY: DATE: APPROVED BY: DATE:	Montana Fish, Wildlife & Parks Upper Swamp Creek Near Wisdom FWP 13-04 SHEET: 1 of 1

REVISED PROPOSAL
FWP UPPER SWAMP CREEK FENCING
FWP# 13-04

Montana Fish, Wildlife & Parks
Design and Construction
PO Box 200701
600 North Park Avenue
Helena, Montana 59620-0701

The undersigned, having familiarized himself with the conditions of the work and the contract documents as prepared **Paul Valle P.O. Box 200701 Helena Montana 59620-0701 Phone 406 841-4013**, agrees to furnish all labor, materials, equipment, and services necessary to complete all general construction work, as bid herein, for a project entitled **UPPER SWAMP CREEK FENCING** in accordance with the Contract Documents including all Addenda. The bidder agrees to perform all the work described below at the price shown as follows:

Base Bid:

Item #	Description	Estimated Quantity	Unit Measure	Unit Price	Amount
1	Mobilization /Demobilization	1	Lump sum		
2	Five strand barb wire with wood post, and jackleg with wood post panels (jacks supplied by owner)	3,575	foot		
3	Five wire jackleg with top rail and rub rail (jacks supplied by owner)	2,670	foot		
4	Metal gates installed on modified jackleg panels (gates supplied by owner)	21	each		
5	Jackleg and rail fence at creek crossings (four rails on the flat with rub rail and top rail)	1,700	foot		
6	Single Jackleg panels (jacks supplied by owner)	15	each		
7	Double Jackleg panels (jacks supplied by owner)	46	each		
8	Willow removal, piling and burning	480 feet	Lump sum		
9	Creek crossings one, one bank crossing and one both side crossing	1	Lump sum		
Total:					**$_____**

BASE

BID:_____

AND /100 DOLLARS ($).

And certifies that he is a duly and regularly licensed contractor registered with the Montana Department of Labor and Industry:

FIRM NAME:_____

TELEPHONE#_____

BY:_____

REGISTRATION#_____

BUSINESS
ADDRESS_____

This bidder acknowledges receipt of the following addenda:

ADDENDUM NO. _____ DATED

ADDENDUM NO. _____ DATED

ADDENDUM NO. _____ DATED

PROJECT NAME upper swamp creek Fence
PROJECT NUMBER FWP 13-04
PREBID LOCATION wisdom
PREBID DATE 10/17/12
CONDUCTED BY Valle / cooper

NAME	REPRESENTING	MAILING ADDRESS	PHONE	FAX	EMAIL
Randy Higgins	Diamond J services	Box 362, Ramsay MT 59748 355 E. Parrot Rd	323-3042		diamond-j-services@hotmail.com
Corey Lindsay	Rehbein Enterprises	Polson, MT	883-5497		rehbeinenterprises@gmail.com ~~rehbeinenterprises@live.com~~
Nick [illegible]	(chris wold) Rocky MT fencing	Butte MT	406-441-2139		rmfencing@live.com
Mike Thomas	Rehbein Enterprises	City Lights Court Polson MT.	466-3148155		
Tim Anderson	Anderson Fencing	P.O. Box 468 Dillon, MT.	406 925-1009		Andersonfencing@gmail.com