Missoula Concrete Construction

www.missoulaconcrete.com

Phone (406) 549-9682 FAX (406) 549-6404

P.O. Box 16086 Missoula, MT 59808-6086

pci CERTIFIED PLANT

Picnic Shelter

Spring Meadow Lake State Park

MT. FWP

Missoula Concrete Const.
Shop Drawings

Drawn By:
Steve McShane

02-28-08

NOTES

1) MIX DESIGN 7.25R

Concrete Aggregate to be state specification material supplied by JTL Group

--One CY

Cement	650 lbs (Holcim Type III)
Water	258 lbs. (31 gal.)
Coarse Agg ¾ Minus	1,950 lbs SSD
Sand	1,100 lbs SSD
MB Glenium 30 /30	66 oz.
MBAE 10 air ent.	6 oz. (4-6%)

.40 Cement / Water Ratio (Max.)
Slump = 2.5-4"

Stripping Strength: 2,500 psi
Final Strength: 4,000 psi

2) ALL REBAR IS GRADE 60 (ASTM A615)

3) REINFORCING WILL BE FASTENED WITH STANDARD WIRE TIES.

4) BARNWOOD TEXTURE - WALLS

5) SHAKE TEXTURE - ROOF

6) SHELTER IS DESIGNED TO ACCOMODATE A ROOF SNOW LOAD OF 60 P.S.F.

Designed for Spring Meadow Lake State Park

GENERAL NOTES

Unless specified otherwise, the following general notes shall apply to all the precast erection drawings.

GENERAL:
It is the responsibility of the General contractor to provide any Field Measurements required on drawings.

It is the responsibility of the General contractor to coordinate Precast Shop drawings with all other trades. (Structural Foundation, Electrical, Steel)

Architect/Engineer approval indicates acceptance of the dimensions shown herein, exposed finishes, and conformance with aesthetic requirements imposed by the precast panels and connections.

Unless otherwise noted on the approved drawings, General Contractor approval indicates all building conditions (column centerlines, floor elevations, foundation walls and grade beams, and dimensions) are in accordance with the Contract Documents.

TOLERANCES:
Precast products will be fabricated to tolerances specified in secion 5 of P.C.I. MNL-117 "Manual for Quality Control for Plants and Production of Precast Concrete Products."

BOWING & MOVEMENT:
This Prestressed structure is designed to move. Bowing due to temperature differential should be expected.

JOINTS:
All joints between precast members or between precast members and work by others are to be considered nominal dimensions only. Due to production, erection and general construction tolerance, these dimensions can vary.

OPENINGS:
Missoula Concrete Construction shall provide only those openings shown on their shop drawings. No opening shall be cut or drilled without MCC approval in writing.

CONCRETE:
It is the responsibility of the General Contractor to coordinate Precast Embed drawings with the Structural Foundation drawings.

ERECTION:
All field welding shall be E70XX.

All connections shall be completed as soon as possible following the precast member erection.

Construction stability of the precast structure during the erection is the responsibility of the precast erector.

Erector shall survey the site before erection and constantly examine the plumb and alignment of the precast member.

ERECTION STEEL:
Material supplied shall be as specified below unless otherwise noted in connection details and design.

Hot rolled steel: A36
Bolts: Grade 5
Threaded rods: Grade 2
Rebar: Grade 60
Coil rods: High Tensile

FIELD DRILLED ANCHORS:
No field drilled anchors shall be applied to any precast member without MCC written approval.

Specification Page

Missoula Concrete Construction
www.missoulaconcrete.com
Phone (406) 549-9682 - Fax (406) 549-6404
P. O. Box 16086 - Missoula, MT 59808-6086

Project: Picnic Shelter		Date: 2-28-08
Contractor: MT. FWP		Revised: 1
Drawing: Specification Sheet		2 / 3
Drawn By: Steve P McShane	Checked By:	Sheet: 1
Scale: No Scale	Released for Fabrication:	Of: 11

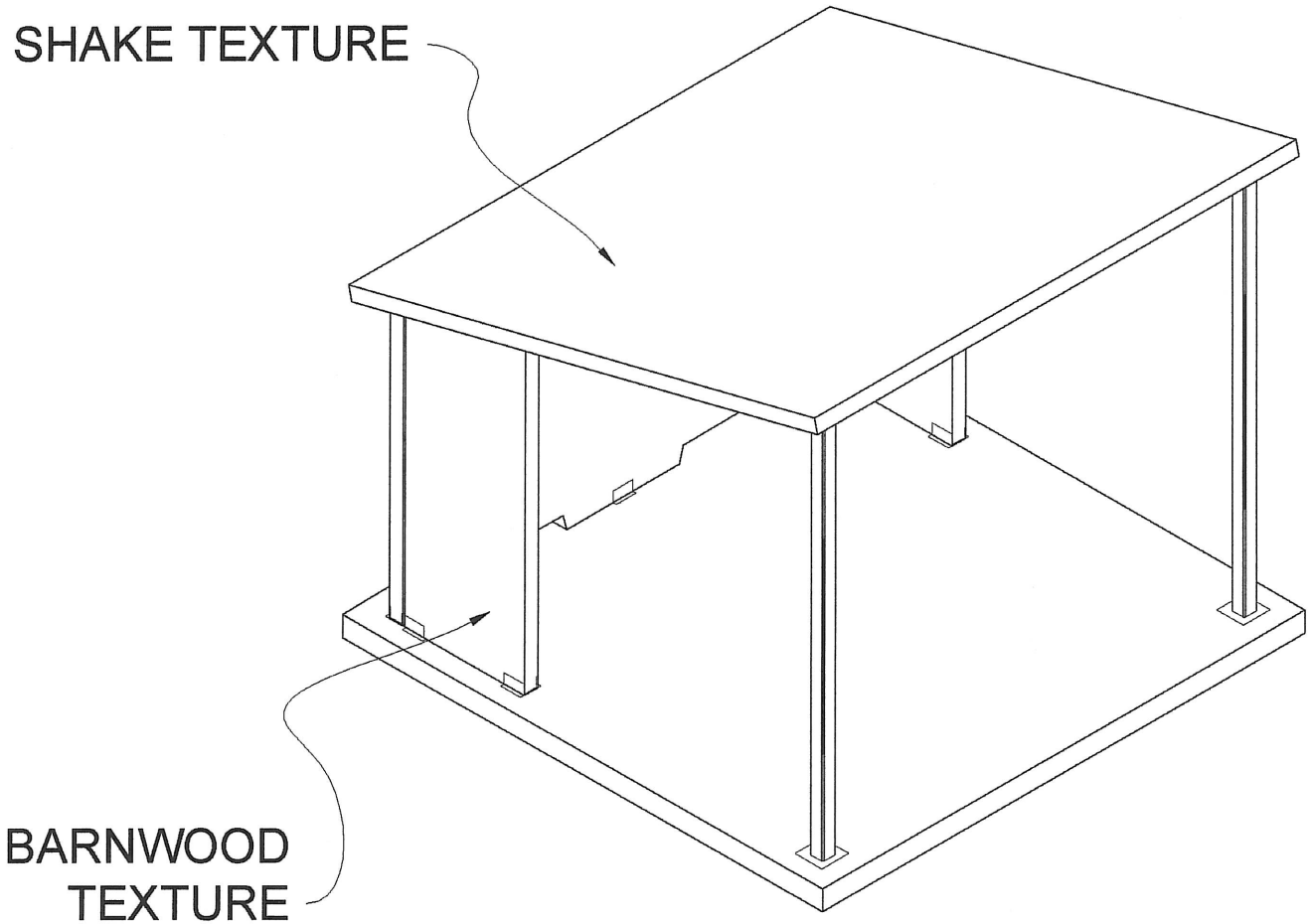

Missoula Concrete Construction
www.missoulaconcrete.com
Phone (406) 549-9682 - Fax (406) 549-6404
P. O. Box 16086 - Missoula, MT 59808-6086

Project: Picnic Shelter		Date: 2-28-08
Contractor: MT. FWP		Revised: 1
Drawing: Iso View		2 / 3
Drawn By: Steve P McShane	Checked By:	Sheet: 2
Scale: No Scale	Released for Fabrication:	Of: 11

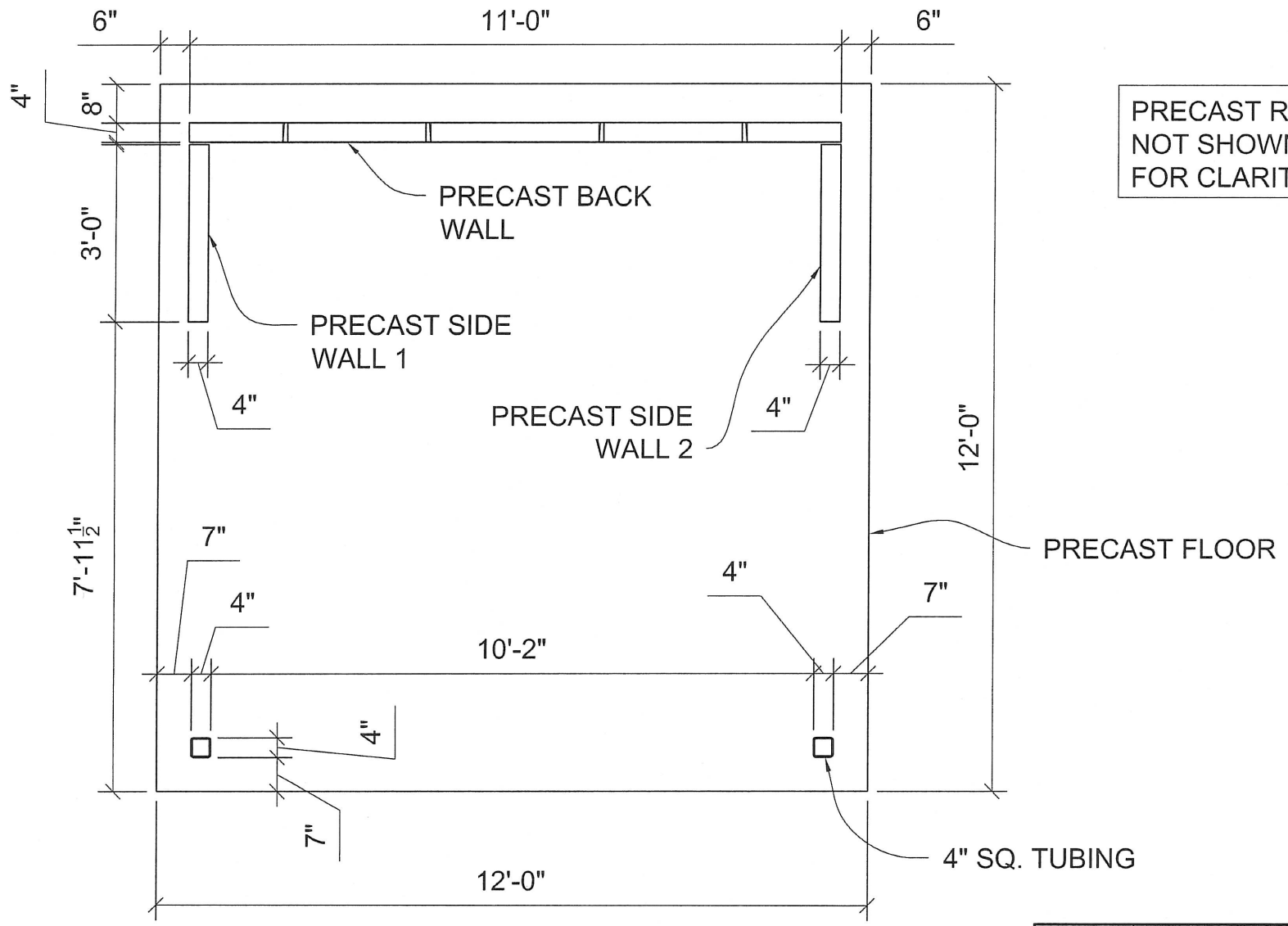

PRECAST ROOF NOT SHOWN FOR CLARITY

Plan View

SCALE: 1/4"=1'

Missoula Concrete Construction	www.missoulaconcrete.com Phone (406) 549-9682 - Fax (406) 549-6404 P. O. Box 16086 - Missoula, MT 59808-6086	
Project: Picnic Shelter		Date: 2-28-08
Contractor: MT. FWP		Revised: 1
Drawing: Plan View		2 / 3
Drawn By: Steve P McShane	Checked By:	Sheet: 3
Scale:	Released for Fabrication:	Of: 11

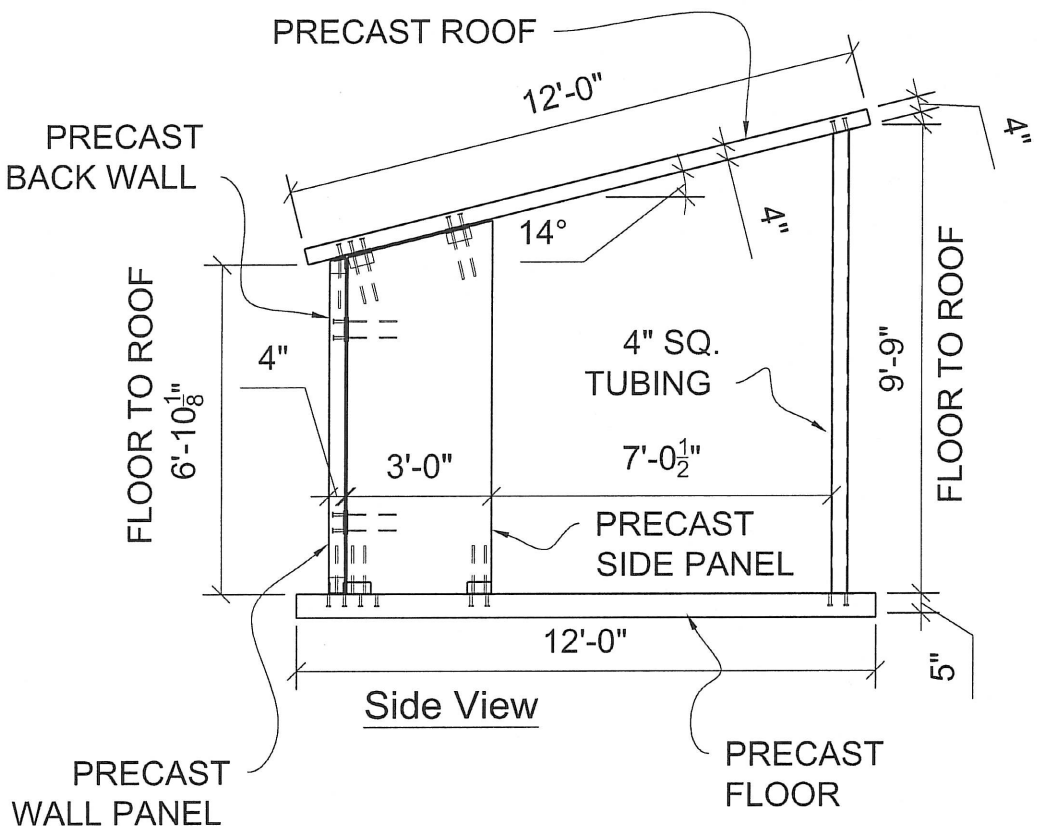

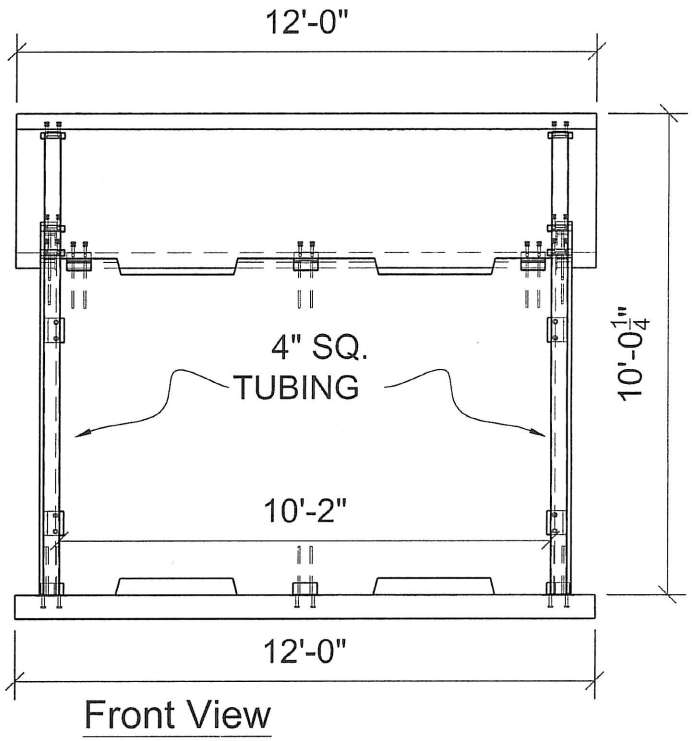

Front and Side View

SCALE: 1/4"=1'

Missoula Concrete Construction	www.missoulaconcrete.com Phone (406) 549-9682 - Fax (406) 549-6404 P. O. Box 16086 - Missoula, MT 59808-6086	
Project: Picnic Shelter		Date: 2-28-08
Contractor: MT. FWP		Revised: 1
Drawing: Front / Side View		2 3
Drawn By: Steve P McShane	Checked By:	Sheet: 4
Scale:	Released for Fabrication:	Of: 11

MK1

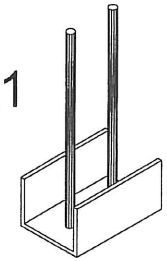

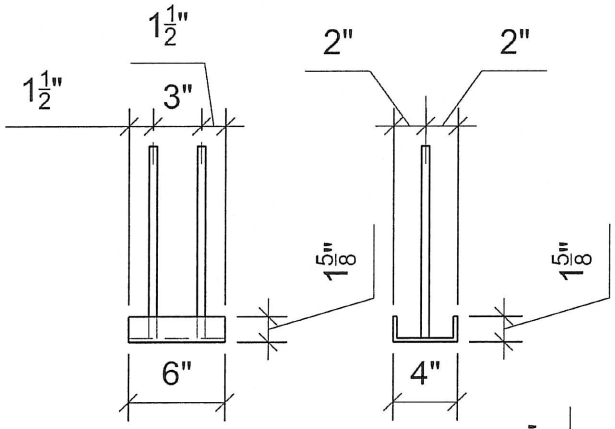

C4x 6"
W/(2) #4 BAR x 12" (7)

MK2

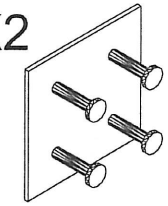

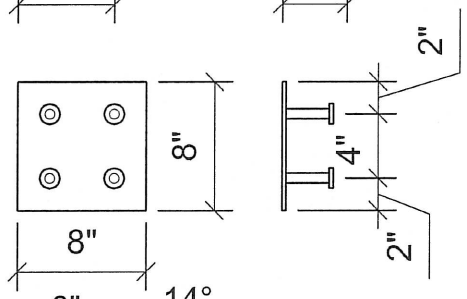

PL ⅜"x 8"x 0'-8"
W/(4)½"Ø x 3" HAS (4)

MK3

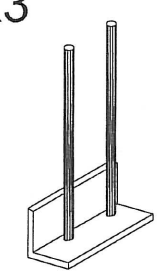

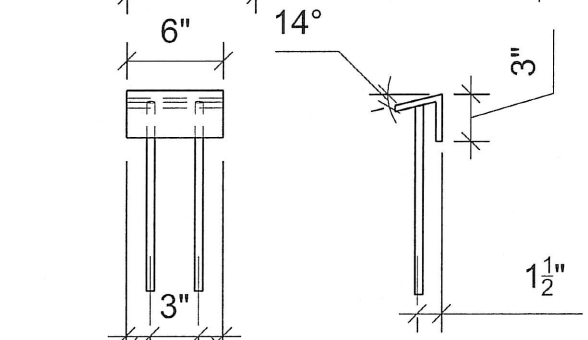

L 3" x 3"x ⅜" x 0'-6"
W/(2)#4 BAR x 12" (3)

MK4

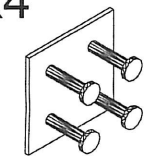

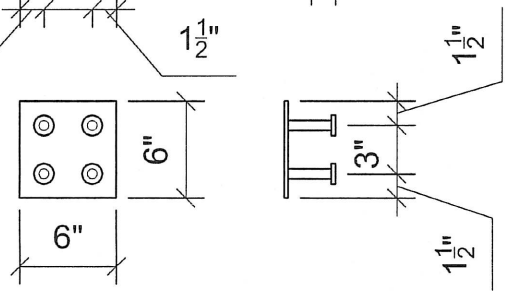

PL ⅜"x 6"x 0'-6"
W/(4)½"Ø x 3" HAS (14)

SCALE: 1"=1'-0"

Missoula Concrete Construction	www.missoulaconcrete.com Phone (406) 549-9682 - Fax (406) 549-6404 P. O. Box 16086 - Missoula, MT 59808-6086	
Project: Picnic Shelter		Date: 2-28-08
Contractor: MT. FWP		Revised: 1
Drawing: Embed Page		2 / 3
Drawn By: Steve P McShane	Checked By:	Sheet 5
Scale:	Released for Fabrication:	Of: 11

MK5

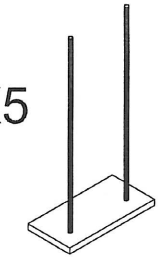

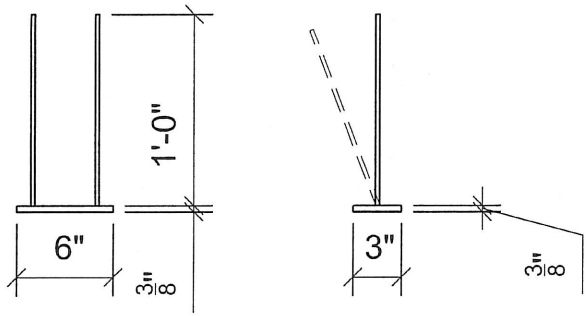

PL $\frac{1}{4}$"x3"x6"
W/(2) ½"Øx12" DBA's @4" GA
(BEND DBA'S 18.4° FOR 12 EMBEDS)

(4)

MK6

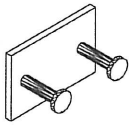

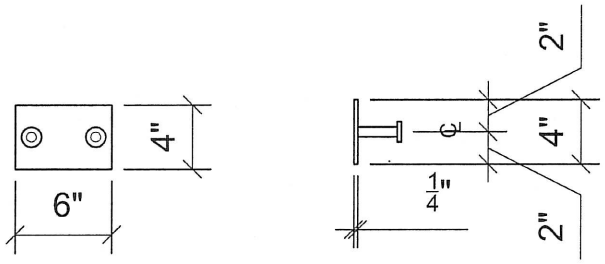

PL $\frac{1}{4}$"x4"x6"
W/(2) $\frac{1}{2}$"Øx3" HAS @4" GA

(4)

MK7

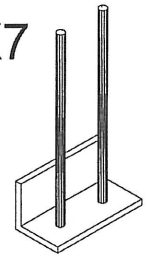

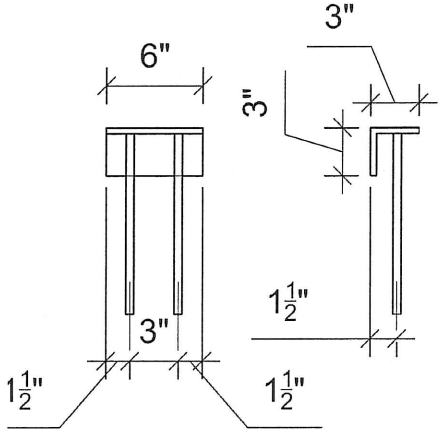

L 3" x 3"x $\frac{3}{8}$" x 0'-6"
W/(2)#4 BAR x 12"

(4)

MK8

HSS 4" x 4" x $\frac{1}{4}$" x 9'-6"
CUT AT A 14° ANGLE

(2)

SCALE: 1"=1'-0"

Missoula Concrete Construction	www.missoulaconcrete.com Phone (406) 549-9682 - Fax (406) 549-6404 P. O. Box 16086 - Missoula, MT 59808-6086	
Project: Picnic Shelter		Date: 2-28-08
Contractor: MT. FWP		Revised: 1
Drawing: Embed Page 2		2 / 3
Drawn By: Steve P McShane	Checked By:	Sheet: 6
Scale:	Released for Fabrication:	Of: 11

BARNWOOD TEXTURE FACE AND EDGES

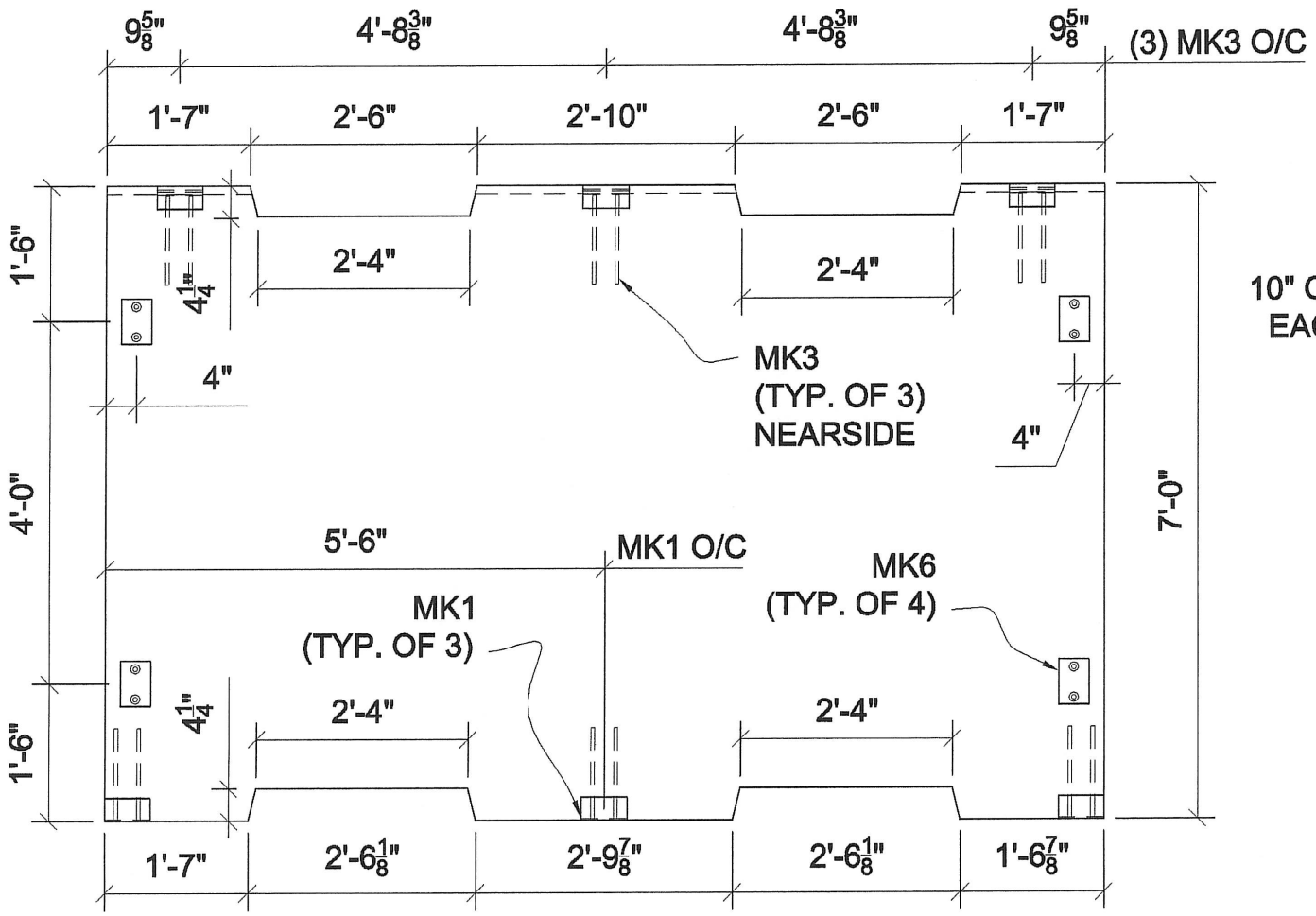

Plan-in-Form View

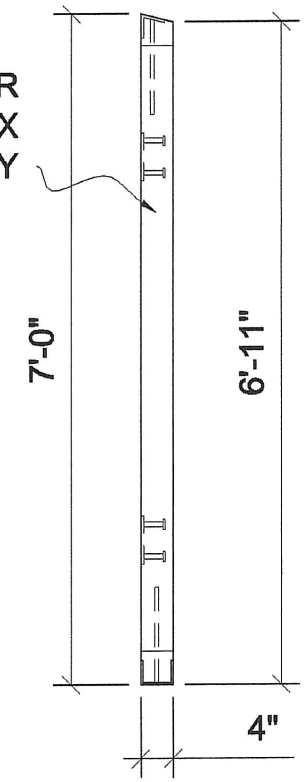

Side View

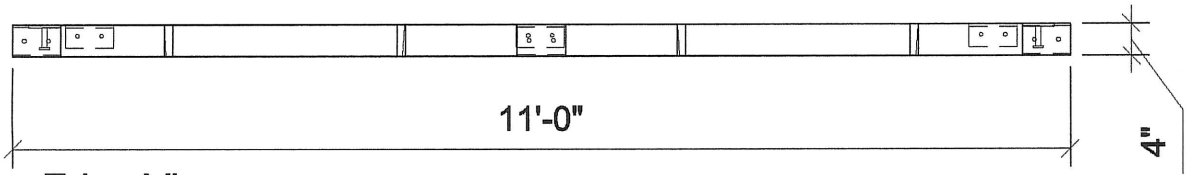

Edge View

Precast Back Wall

SCALE: $\frac{1}{2}$"=1'-0"

Missoula Concrete Construction	www.missoulaconcrete.com Phone (406) 549-9682 - Fax (406) 549-6404 P. O. Box 16086 - Missoula, MT 59808-6086	
Project: Picnic Shelter		Date: 2-28-08
Contractor: MT. FWP		Revised: 1
Drawing: Precast Back Wall		2 / 3
Drawn By: Steve P McShane	Checked By:	Sheet: 7
Scale:	Released for Fabrication:	Of: 11

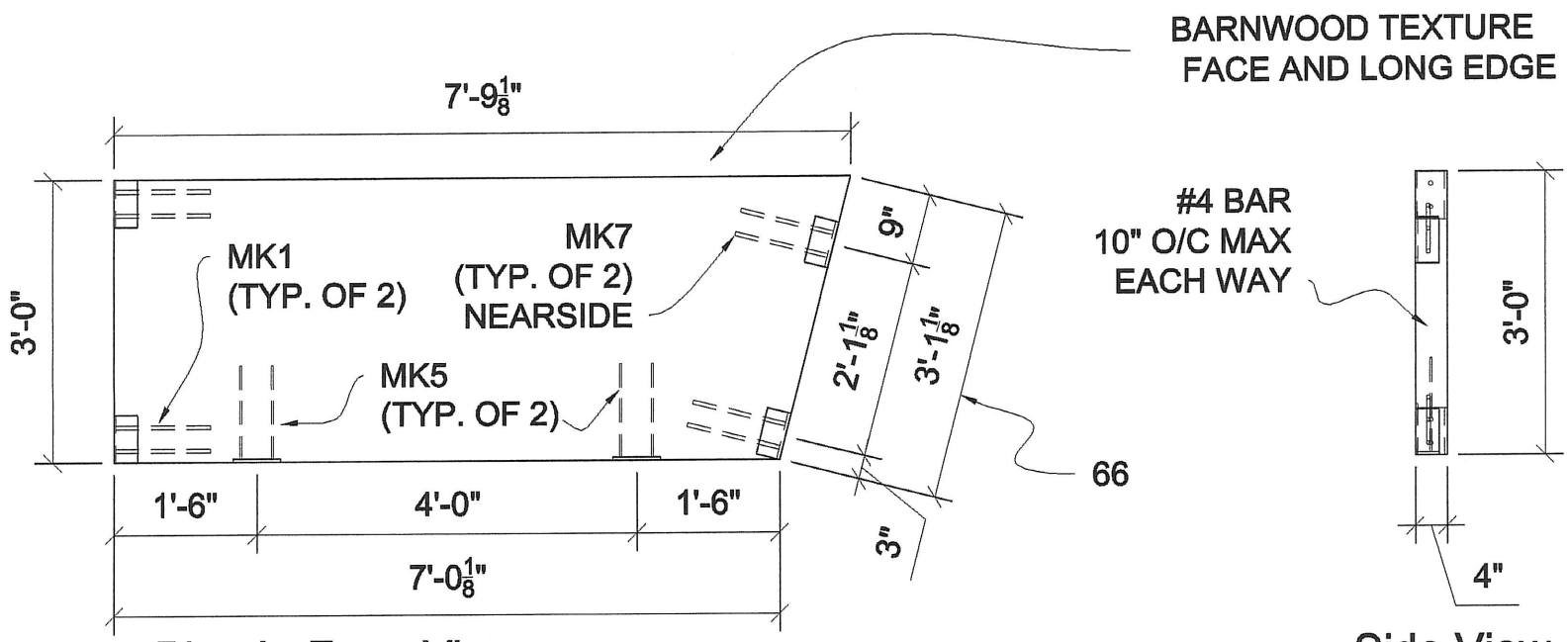

Plan-in-Form View

Side View

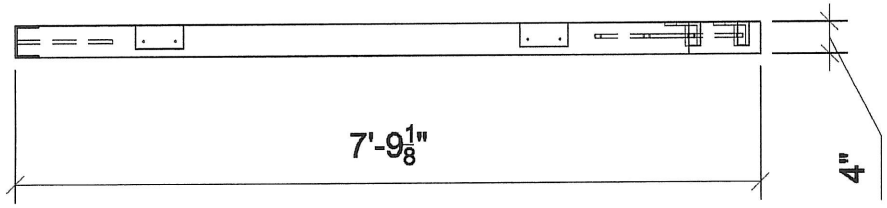

End View

Precast Side Wall 1

SCALE: 1/2"=1'-0"

Missoula Concrete Construction
www.missoulaconcrete.com
Phone (406) 549-9682 - Fax (406) 549-6404
P. O. Box 16086 - Missoula, MT 59808-6086

Project: Picnic Shelter		Date: 2-28-08
Contractor: MT. FWP		Revised: 1
Drawing: Precast Side Wall 1		2 / 3
Drawn By: Steve P McShane	Checked By:	Sheet: 8
Scale:	Released for Fabrication:	Of: 11

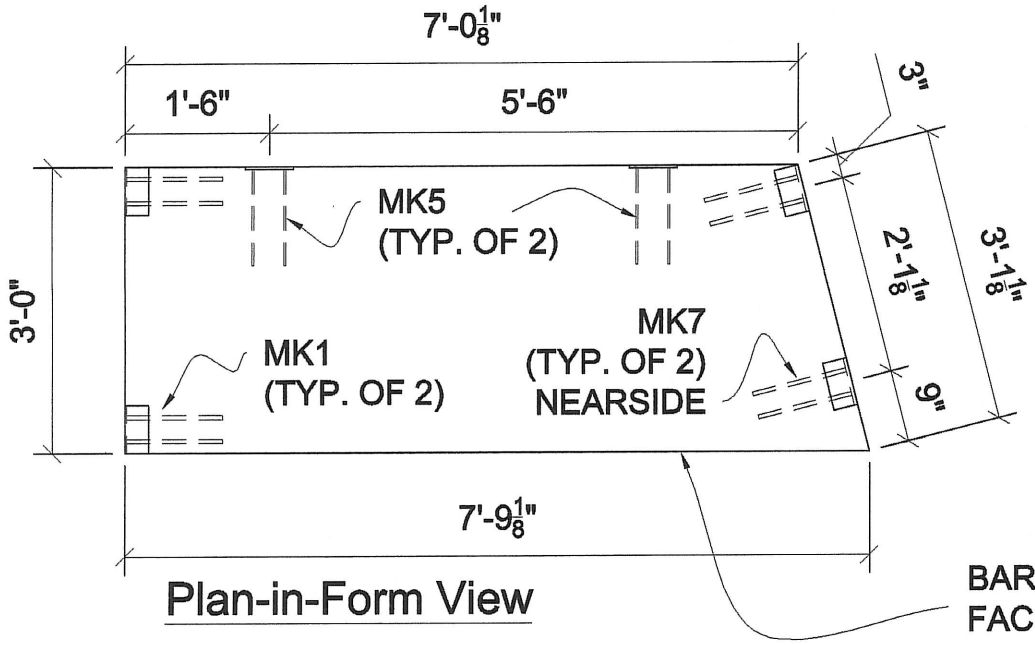

Plan-in-Form View

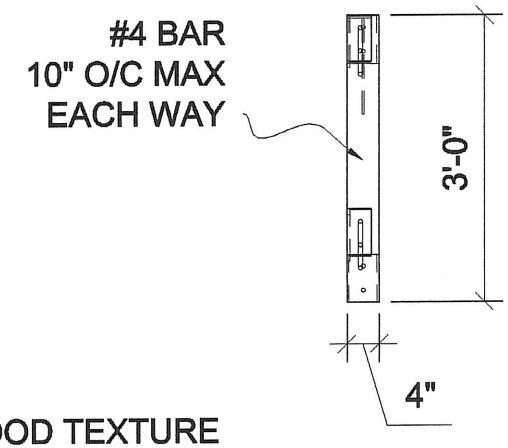

Side View

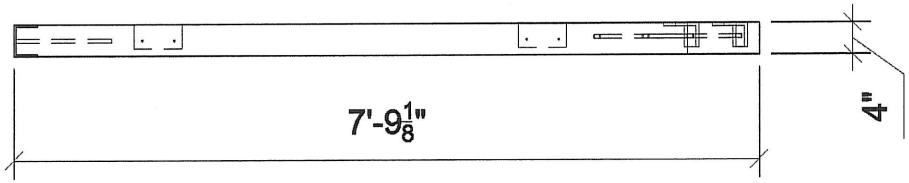

End View

Precast Side Wall 2

SCALE: 1/2"=1'-0"

Missoula Concrete Construction	www.missoulaconcrete.com Phone (406) 549-9682 - Fax (406) 549-6404 P. O. Box 16086 - Missoula, MT 59808-6086	
Project: Picnic Shelter		Date: 2-28-08
Contractor: MT. FWP		Revised: 1
Drawing: Precast Side Wall 2		2
		3
Drawn By: Steve P McShane	Checked By:	Sheet: 9
Scale:	Released for Fabrication:	Of: 11

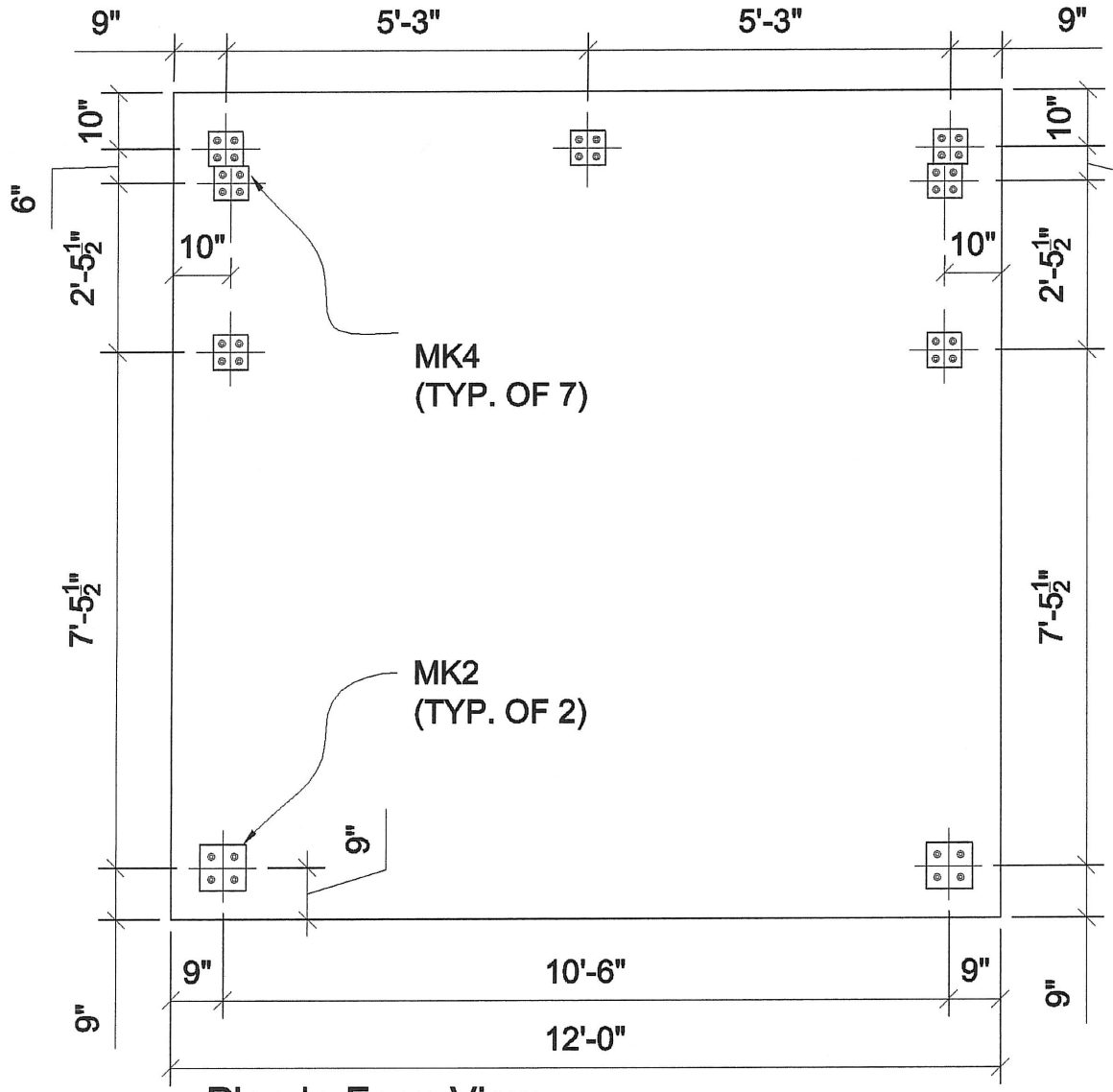

Plan-in-Form View

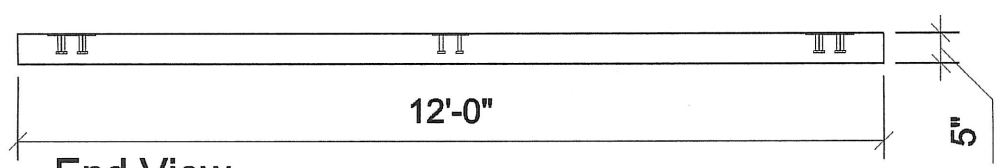

End View

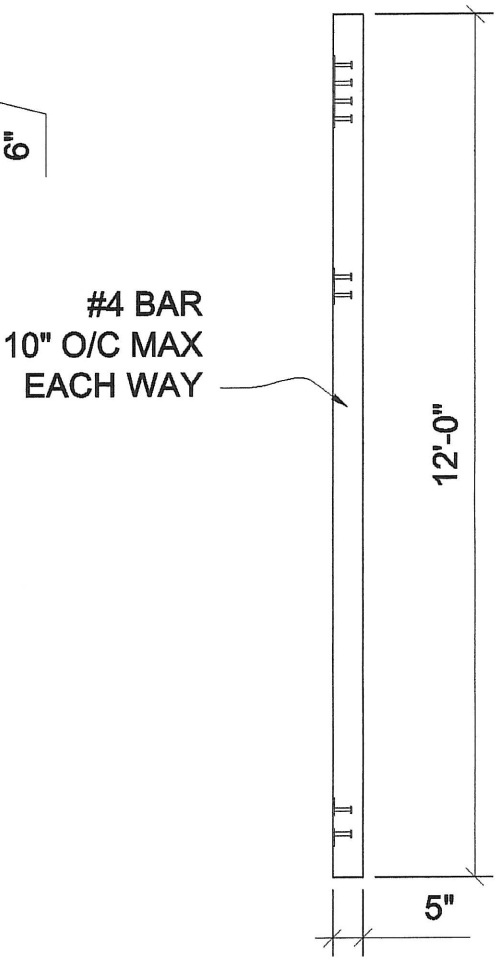

Side View

SCALE: $\frac{3}{8}$"=1'-0"

Missoula Concrete Construction	www.missoulaconcrete.com Phone (406) 549-9682 - Fax (406) 549-6404 P. O. Box 16086 - Missoula, MT 59808-6086	
Project: Picnic Shelter		Date: 2-28-08
Contractor: MT. FWP		Revised: 1
Drawing: Precast Floor		2 / 3
Drawn By: Steve P McShane	Checked By:	Sheet: 10
Scale:	Released for Fabrication:	Of: 11

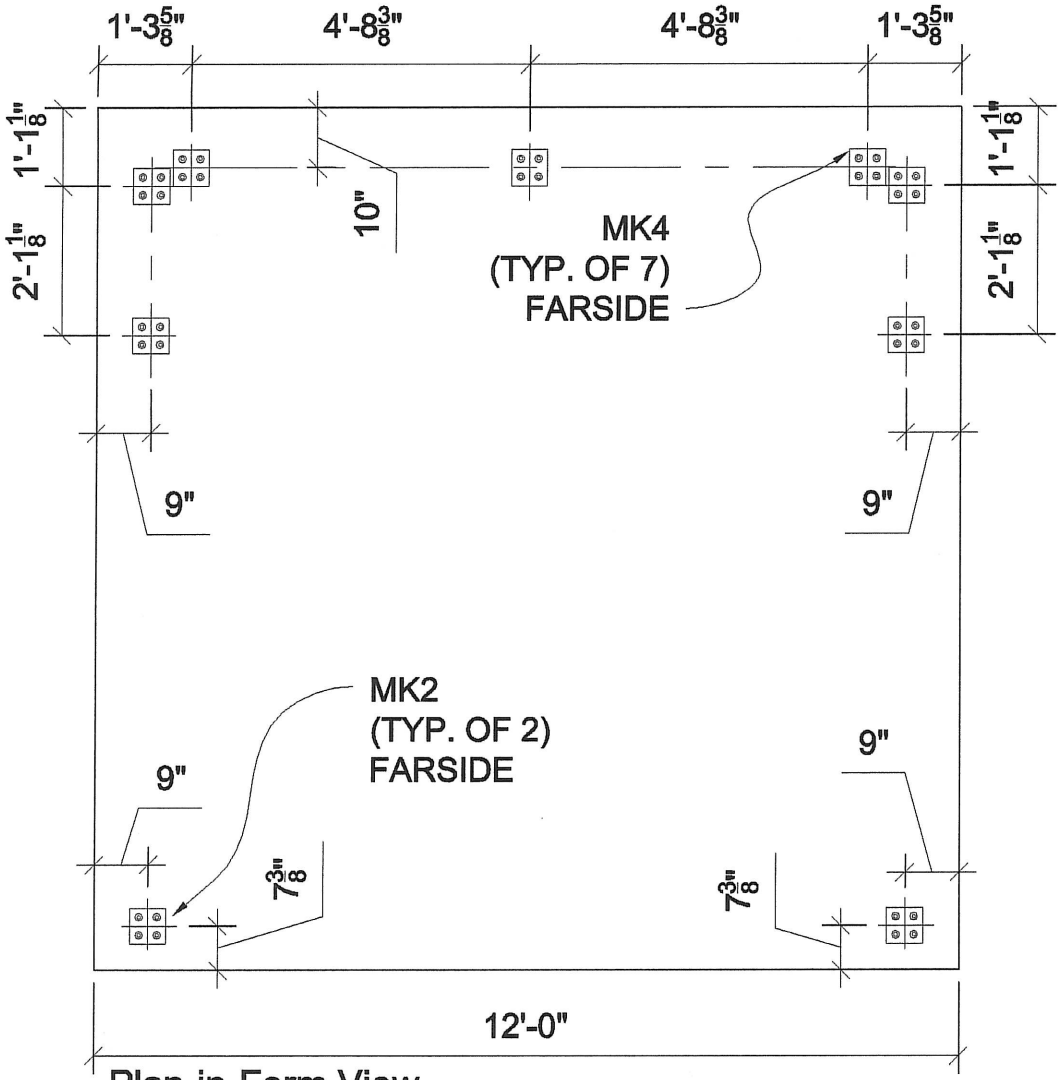

Plan-in-Form View

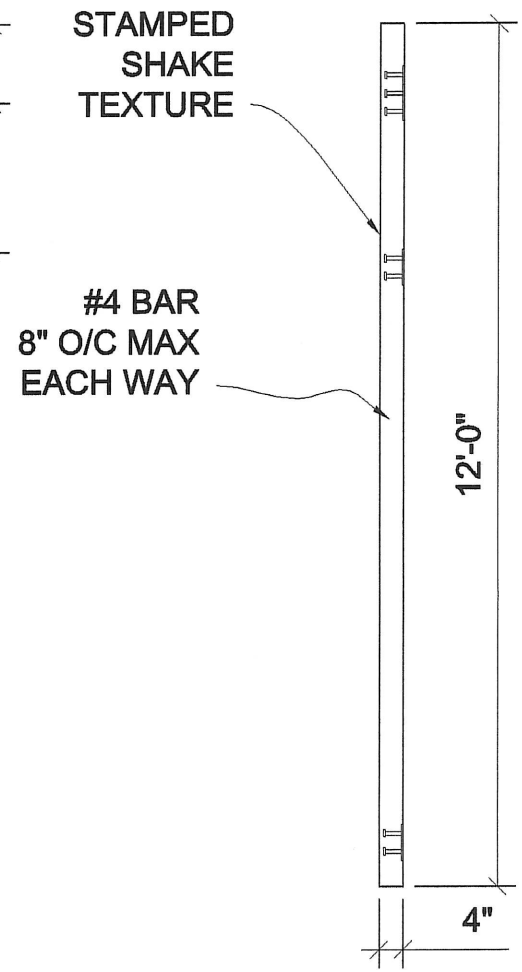

Side View

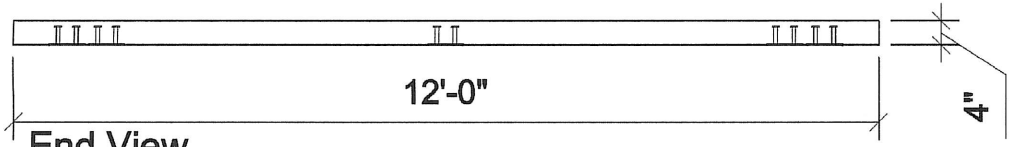

End View

SCALE: 3/8"=1'-0"

Missoula Concrete Construction
www.missoulaconcrete.com
Phone (406) 549-9682 - Fax (406) 549-6404
P. O. Box 16086 - Missoula, MT 59808-6086

Project: Picnic Shelter		Date: 2-28-08
Contractor: MT. FWP		Revised: 1
Drawing: Precast Roof		2 / 3
Drawn By: Steve P McShane	Checked By:	Sheet: 11
Scale:	Released for Fabrication:	Of: 11